e-lego

Manual

31/01/2025

Documentation

https://heibox.uni-heidelberg.de/f/5b7db6b8e09b43b0a7db/?dl=1

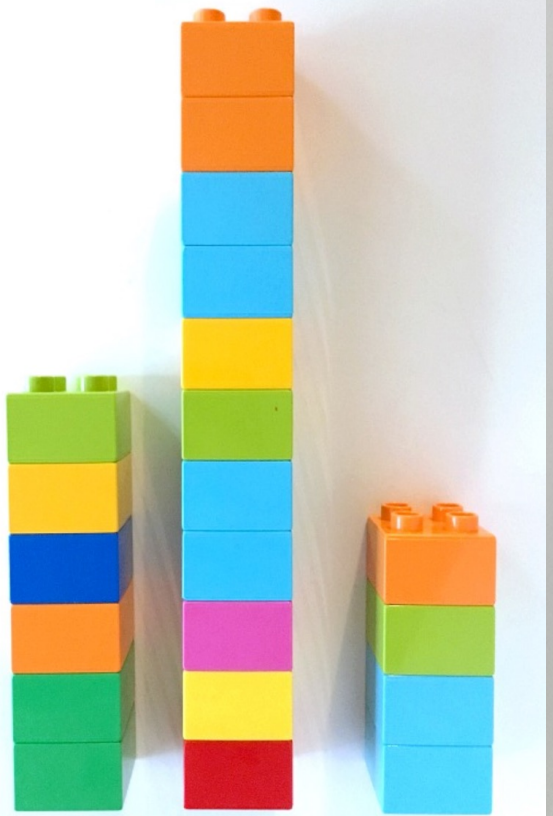

What do you typically need for an electronic circuit ?

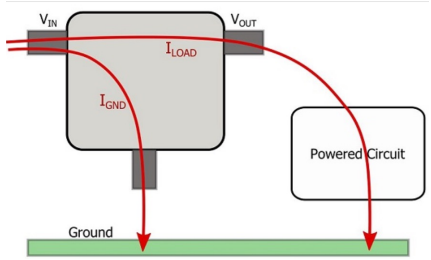

power supply

case

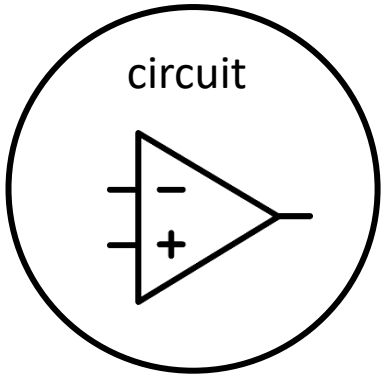

connectors

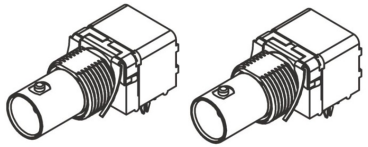

put it together from models→ e-lego

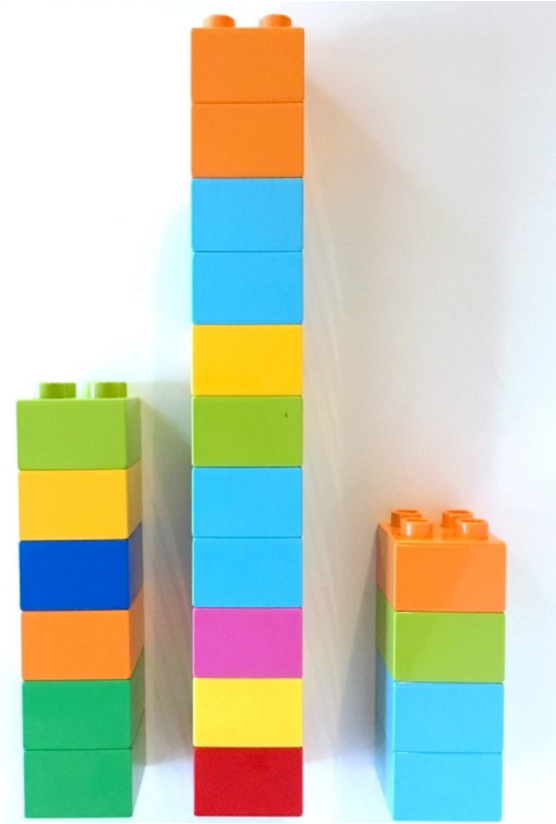

e-lego design

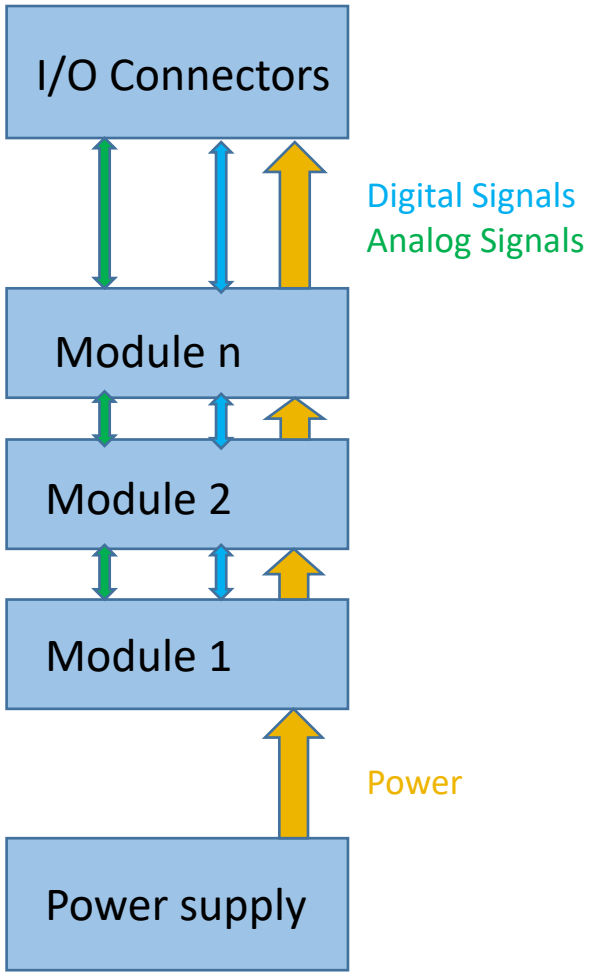

e-lego unit

Idea:

- modules: power, circuit models, I/Os
- each module distributes the power and the signals
- each module has its own case
- scalable (no rack, no mainboard)
- several modules form units

Example: AOM driver

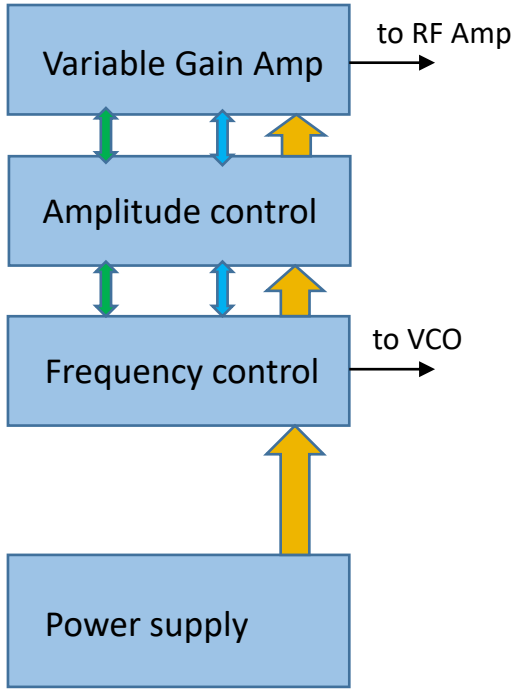

e-lego unit

e-lego platform

Analog

A-Arduino
connected to µC ADC

AIO-Standard

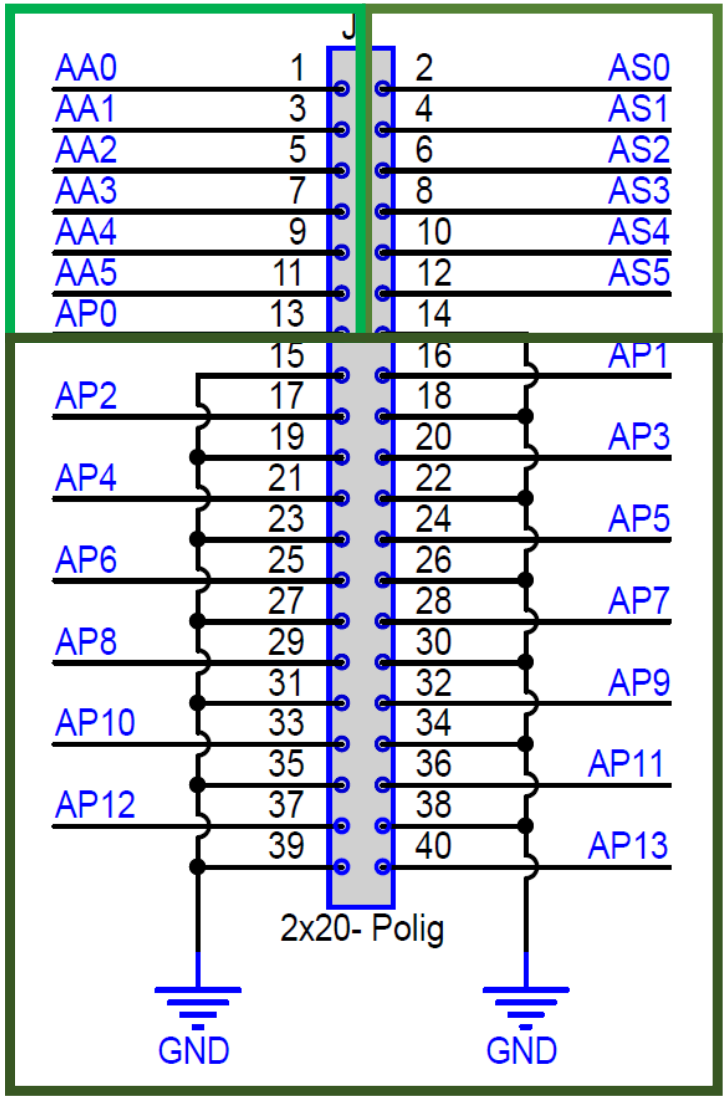

AIO-Precission
shielded by surrounding ground pins

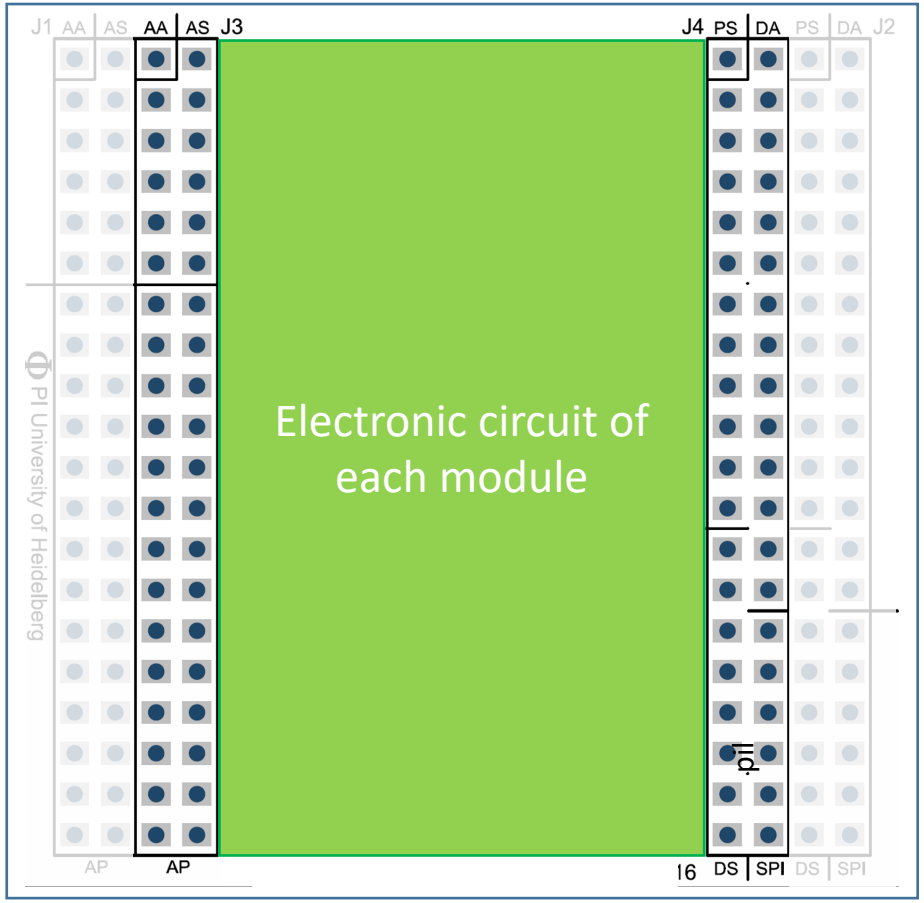

duplicates

Two double-rows of pin:

Accessable on each board

For interconnecting the modules

Power + Digital

Supply Voltages

DIO-Arduino
connected to µC DIO

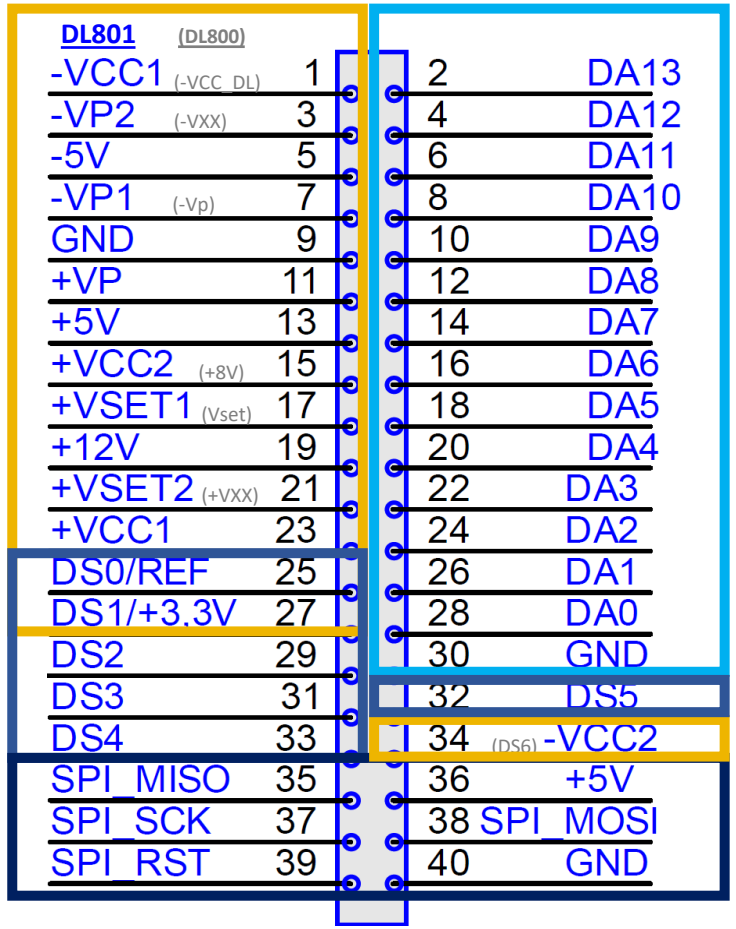

DIO - Standard

SPI
connected to µC SPI

Default Values:

-VCC1:	-7V (-13V/-24V)
-VP2:	-2,7V
-VP1:	-6V
-VCC2:	-13V (-24V)
+VP: =	+VSET1
+VCC2:	+7V
+VSET1:	+6V
+VSET2:	+18V
+VCC1:	+13V (+24V)

What do you typically need for an electronic circuit ?

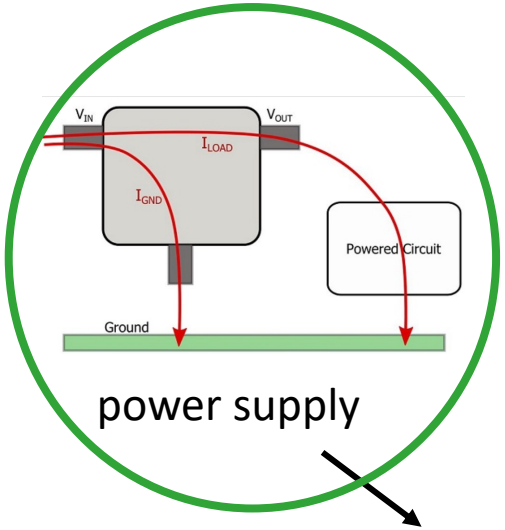

power supply

case

circuit

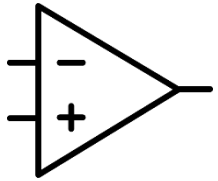

connectors

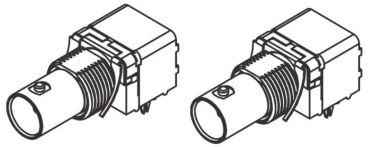

e-lego module

Power Supply Module: DL 800 or DL801

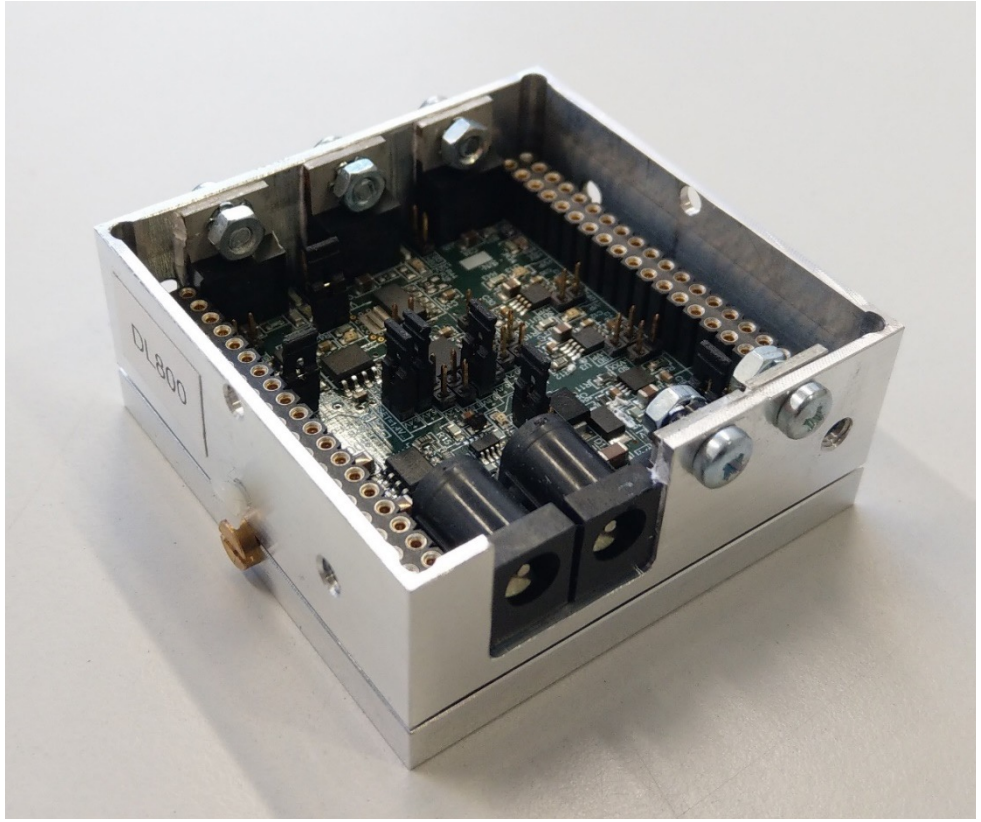

board with various linear regulators,

-Vp	resistor adjustable
-VXX	resistor adjustable
-5V,	
+3.3V,	
+5V,	
+8V,	
+12V,	
+VSET	**jumper-adjustable**
+VXX	resistor adjustable
+Vp	resistor adjustable

RA: resistor adjustable, JA: jumper-adjustable

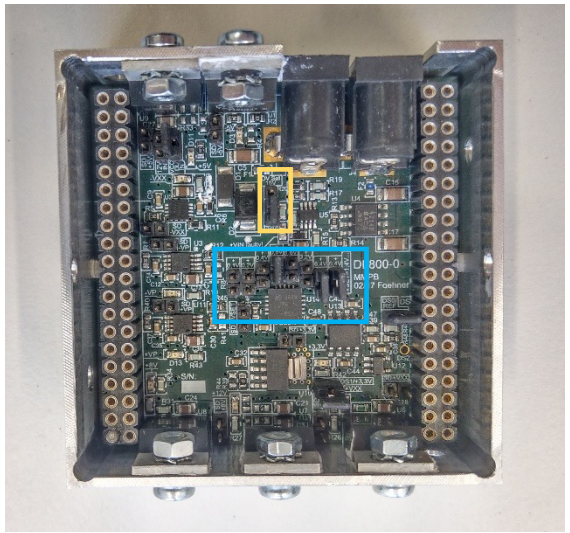

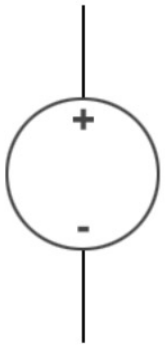

Special feature: select pos. voltage via jumper

Stepsize: 0.1 V, range 1.4 -20.5V

Features:

- Various possitive and negative voltage sources
- **Jumper selectable possitive source** (indicated by blue box)
- Maximum supply voltage for negative sources (16 V)
- **Overvoltage protection for possitive supplies selectable by jumper either to 16V or 26V** (indicated by yellow box)

application: any power supply you need

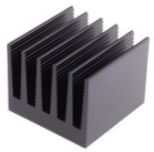

heatsinks available

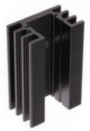

\\147.142.16.140\geraete\Geraete\DL\DL800_Modular_Multi_Purpose_Board

What do you typically need for an electronic circuit ?

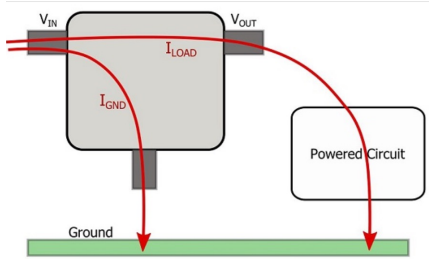

power supply

case

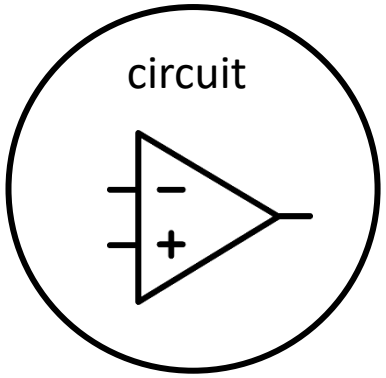

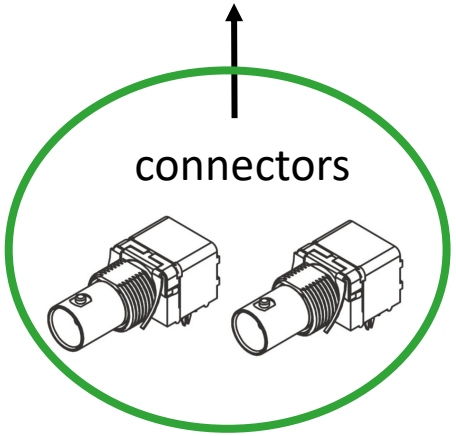

e-lego module

BNC Connector board SU 802

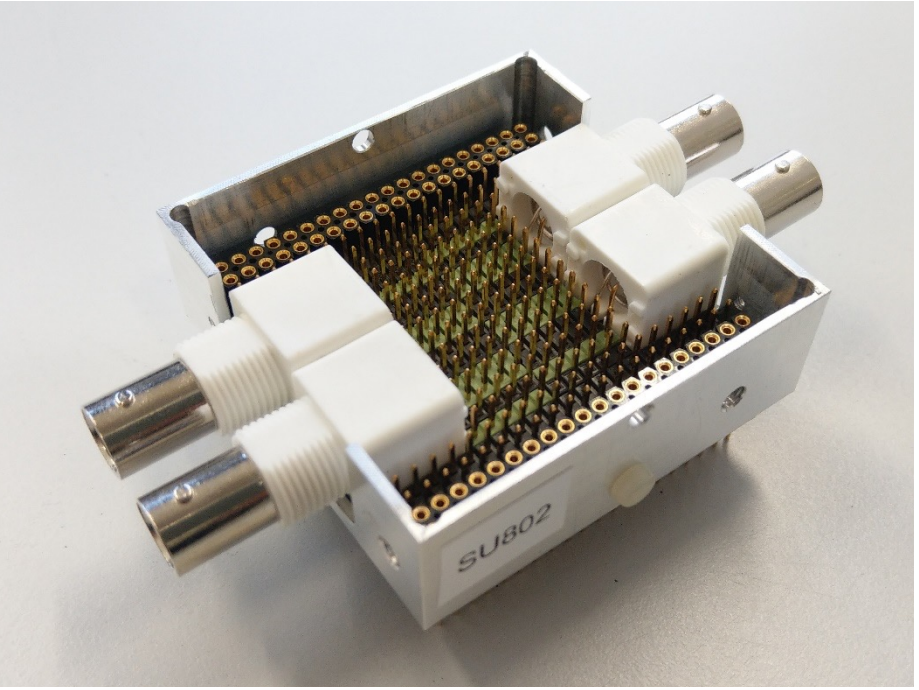

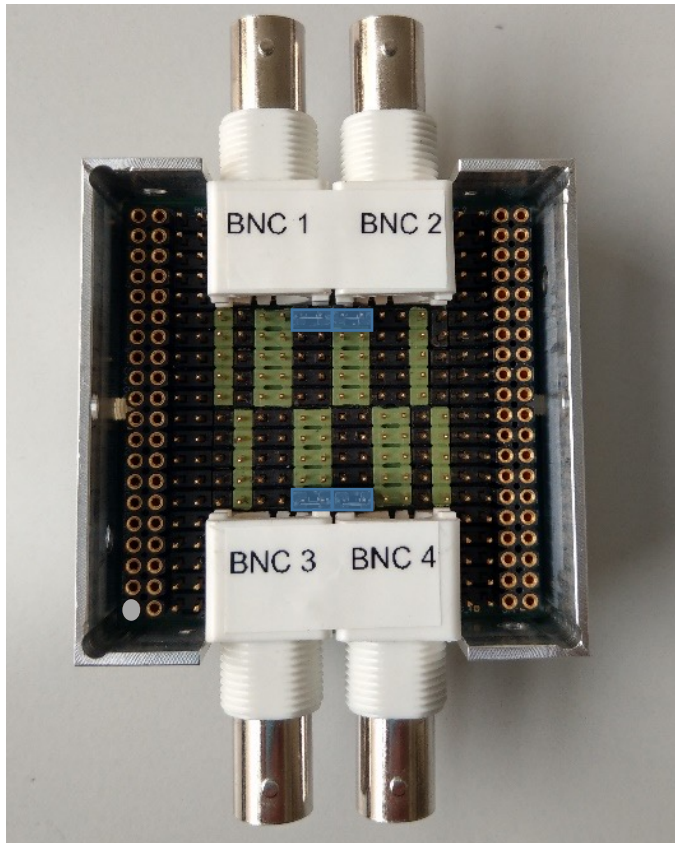

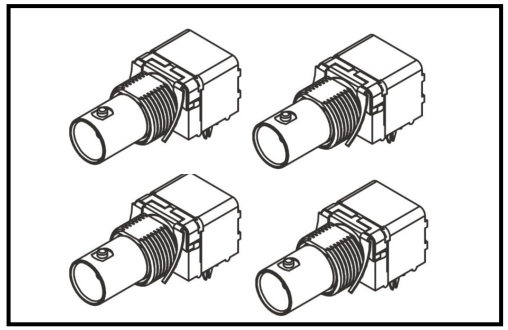

- **4 BNC** connectors
- **Pin rows** to connect different signals to the BNCs via **Jumper or Jumper cable**

\\147.142.16.140\geraete\Geraete\SU\SU802_BNC_Connector_Board

What do you typically need for an electronic circuit ?

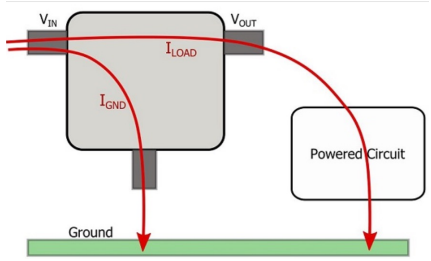

power supply

case

circuit

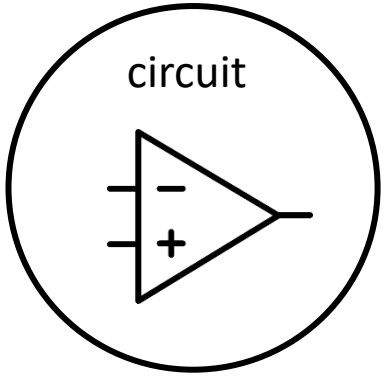

connectors

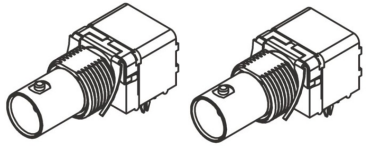

Which kind of electronics do you typically need ?

e-lego modules

- Digital electronics

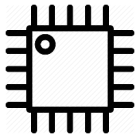

- Amplification circuits

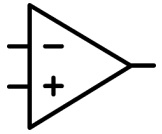

- Photodiodes

- PID regulator

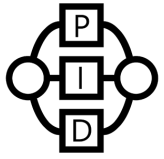

- Optocoupler Switches, Gate drivers, FETs
- H-bridge driver

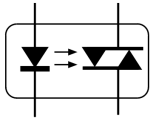

- RF control

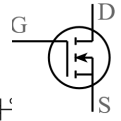

- Customized electronics

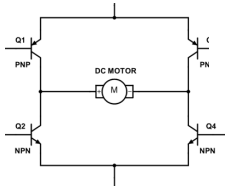

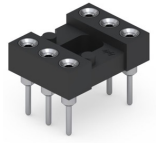

unitrs

- AOM driver
- Interlocks

How to built your own e-lego circuit ?

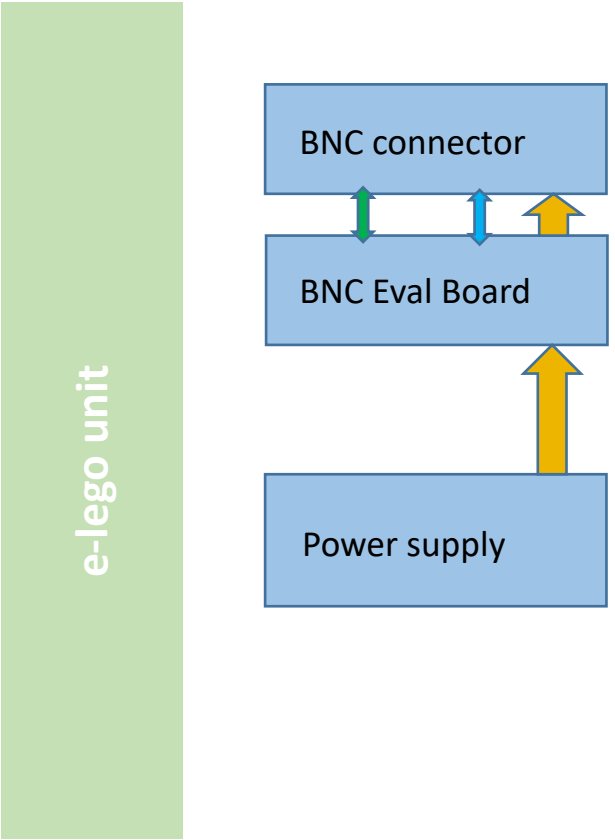

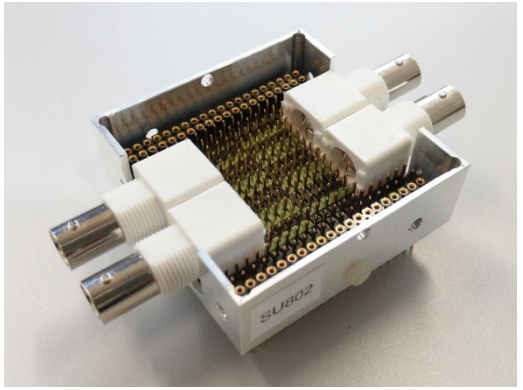

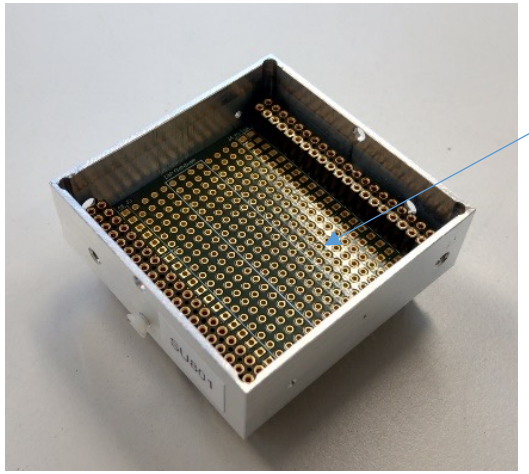

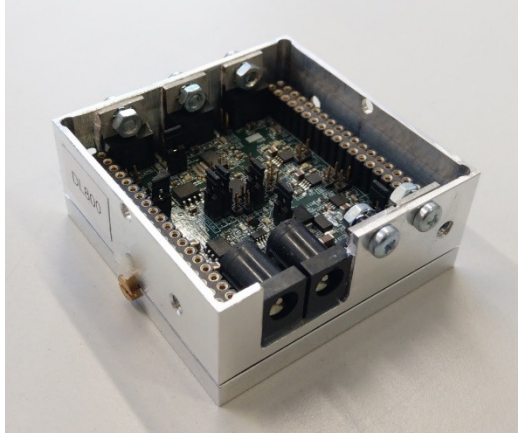

Put your own circuit here

How to built an e-lego unit ?

Example:
AOM driver

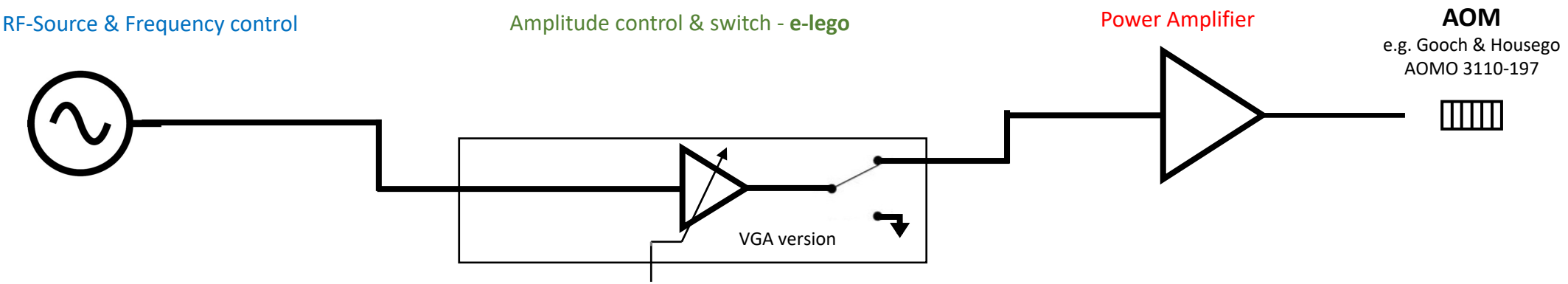

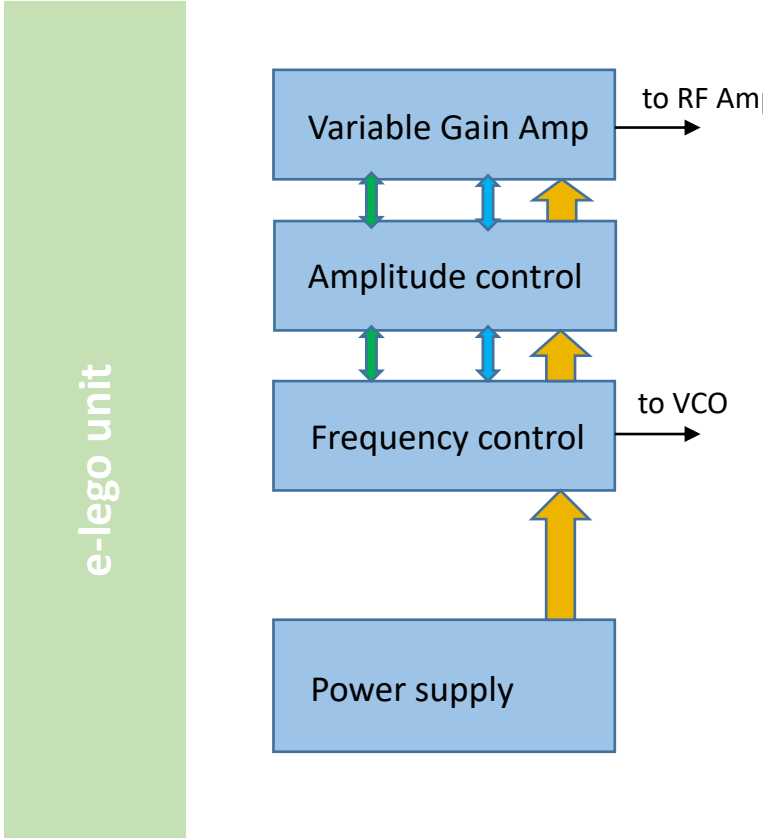

1) **Select the needed modules**

2) **Configure the modules (Jumper settings, cables, etc..)**

Example 1: Q-Dr007 – e-lego AOM driver with VCO and VGA and internal & external amp. & freq. control

e-lego unit

DL800 (light) + **SU804** + **SU804** + **SU812**

Power Supply | Universal driver Gain 1.7 | Universal driver Gain | Variable Gain amplifier

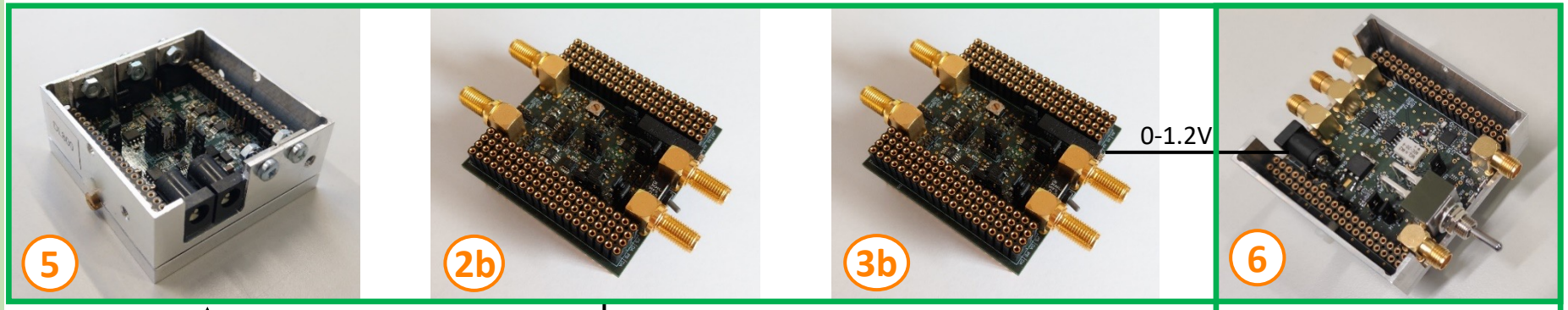

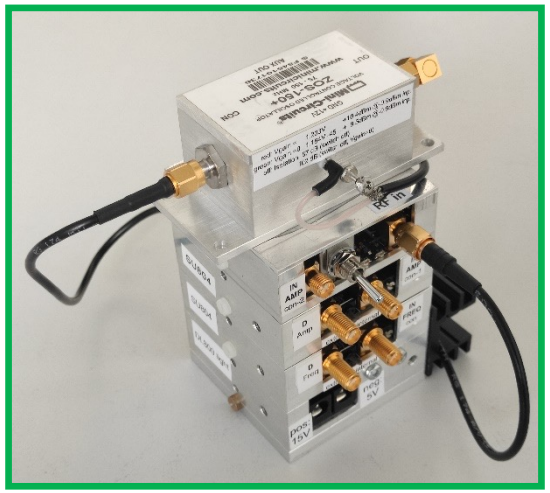

neg: 5V pos: 15V

0-13 V

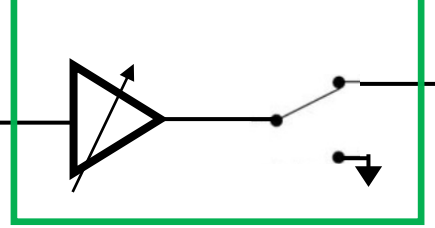

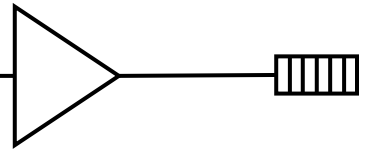

ZHL-5W-1+

Gooch&Housego
AOMO 3110-197

VCO: ZOS-150+

Tunable Frequency source | VGA Amplitude control and switch | Power Amplifier | AOM

Example 2: SmartLab: Record Analog Values of MOT Photodiodes – Q-Ar006

SU815: Ethernet Shield → Ethernet: data to smart lab server

SU803 Arduino

4 Photodiodes from MOT Setup → SU802 BNC Connectors - Photodiodes

Trigger from experimental control → SU802 BNC Connectors - Trigger

https://www-intern.physi.uni-heidelberg.de/Wikis/ultracold_wiki/index.php/SmartLab

e-lego unit

How to test an assembled e-lego unit ?

Use lab power supply
to limit the current to typically 50 to 100 mA

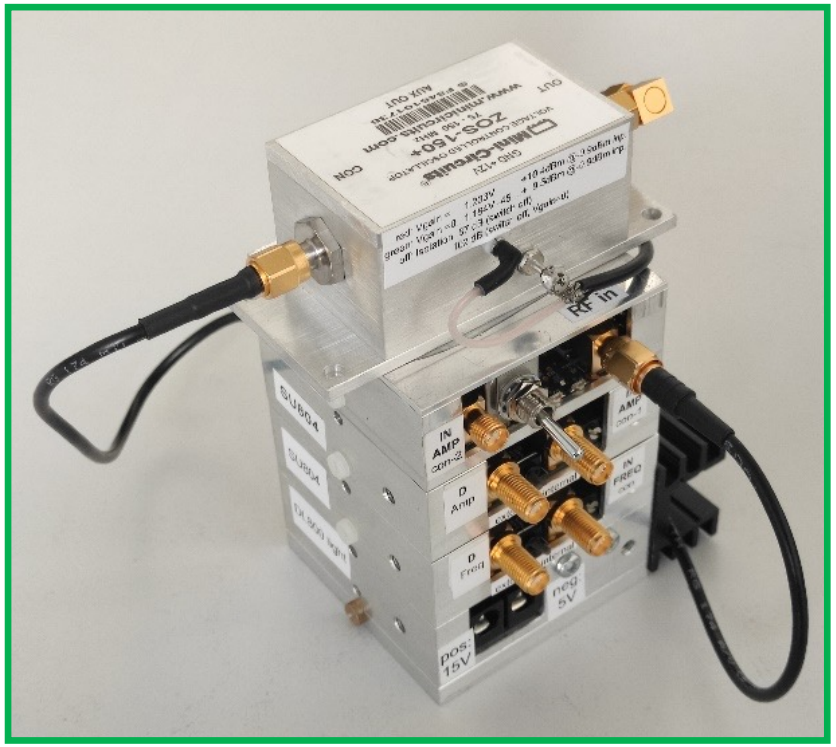

How to label electronics

Please document all electronic circuits and boxes by

1.) Label it with a serial number

2.) Save the circuit diagram on the pi2 -server

```
\\pi2.physi.uni-heidelberg.de\microcontroller\QD-ultracold\
```

Use your active directory credentials "ad\name" to access the pi2-server.

For a new development create a new folder with a consecutive serial number. E.g. if you develop a new current control circuit create a new folder Q-CC003 if the previous serial number in the CC folder has been Q-CC002. If you make a modification to the Q-CC003, generate a new version in the folder, e.g Q-CC003-2. For the sub-folder structure of each folder use the one which is given in the template.

```
\\pi2.physi.uni-heidelberg.de\microcontroller\QD-ultracold\Q-00 template\
```

Put the Serial Number onto your Box. Use a Dymo label or a Box-ID label For the documentation put all available files (schematics, layout, CAD files, software code, documentation, etc..) into that folder. You can use whatever format you prefer. If you have some wiki or online documentation, please put the corresponding link into a text file.

Developments made by the electronic workshop.

E-workshop wiki

The documentation of EW developments can be found in the following folder:

```
\\pi2.physi.uni-heidelberg.de\geraete\Geraete
```

To add some own documentation, e.g. a test result, you can obtain write access to the specific subfolder by writing an email to edv@physi.uni-heidelberg.de [1] with the following message

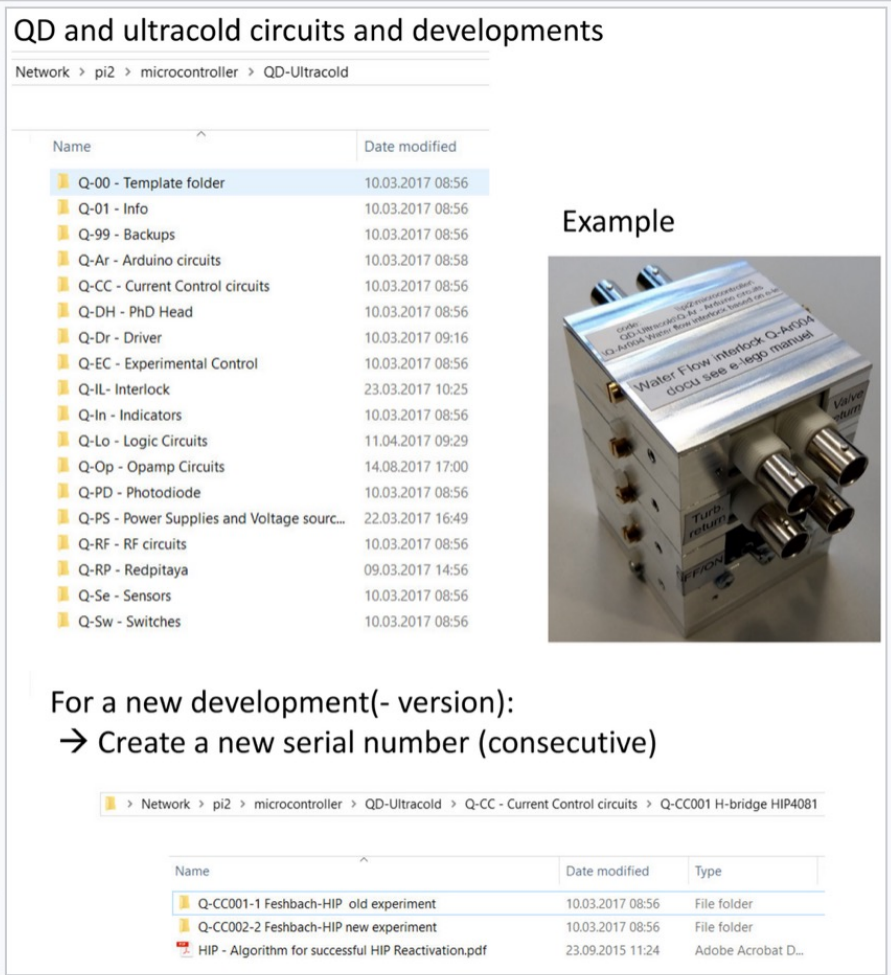

Label, folder structure and example

https://www-intern.physi.uni-heidelberg.de/Wikis/ultracold_wiki/index.php/How_to_label_electronics

How to start a production in the workshop

- **Start with an empty module**
- **Sketch your circuit**

A-Arduino
connected to µC ADC

AIO-Standard

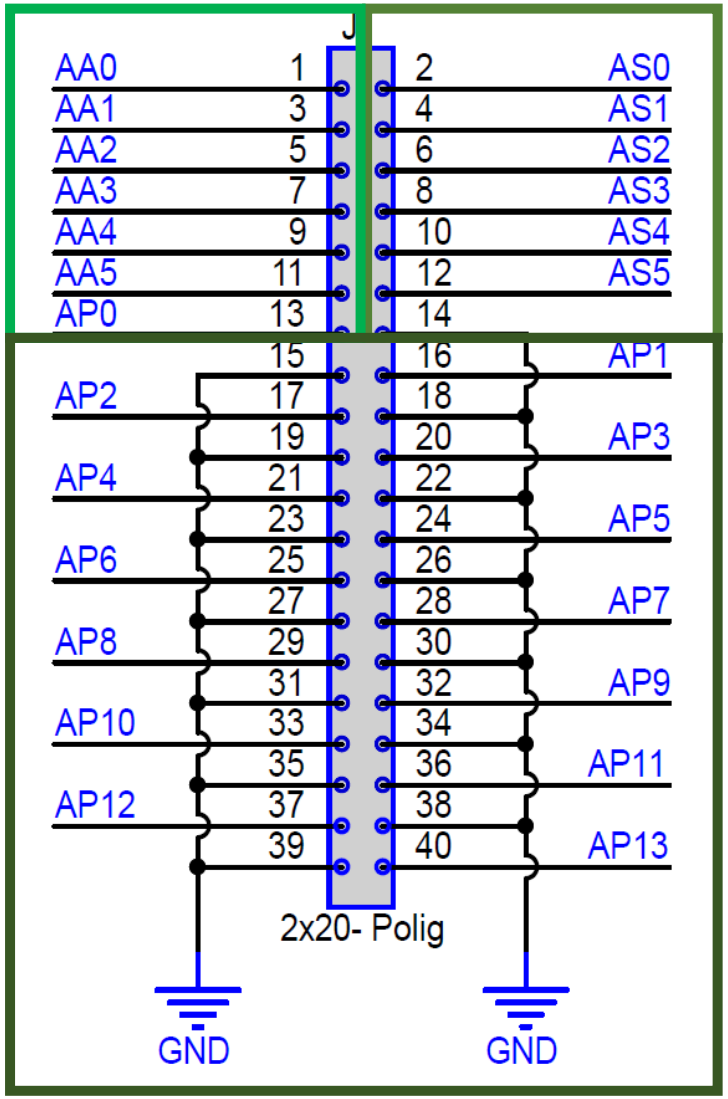

AIO-Precission
shielded by surrounding ground pins

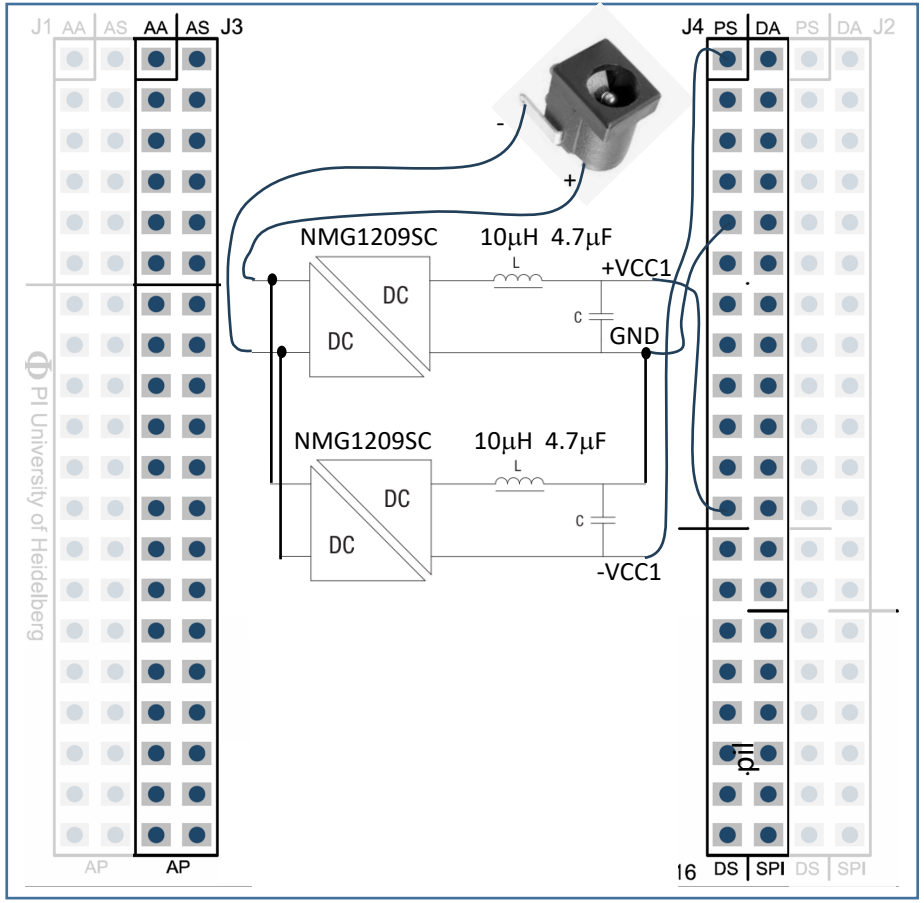

Supply Voltages

DIO-Arduino
connected to µC DIO

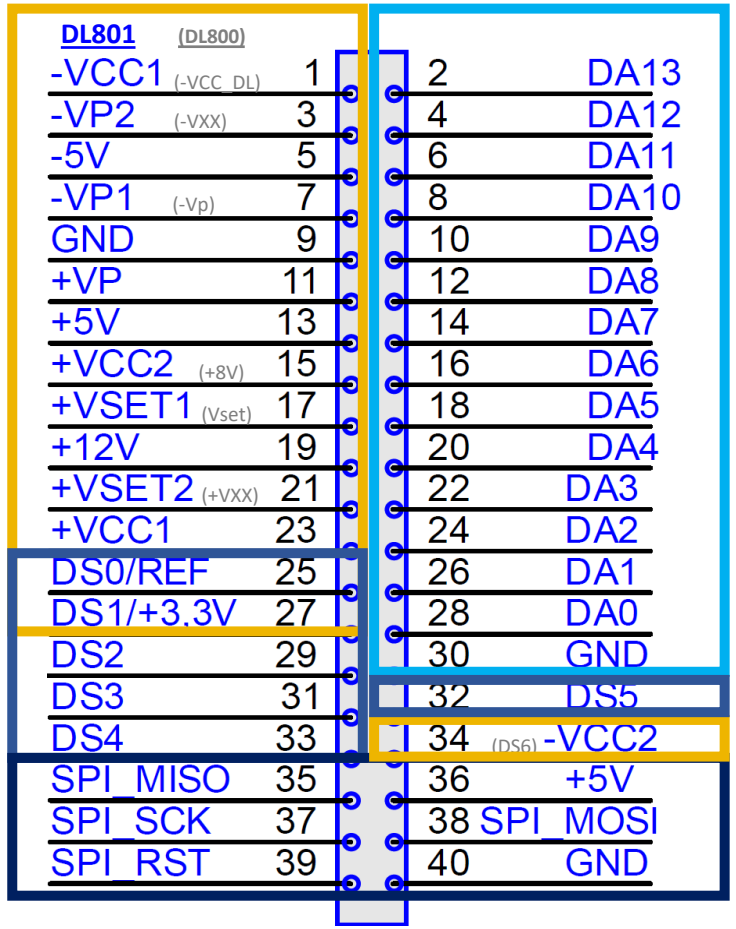

duplicates **DIO - Standard**

SPI
connected to µC SPI

Default Values:

-VCC1:	-7V (-13V/-24V)
-VP2:	-2,7V
-VP1:	-6V
-VCC2:	-13V (-24V)
+VP: =	+VSET1
+VCC2:	+7V
+VSET1:	+6V
+VSET2:	+18V
+VCC1:	+13V (+24V)

The e-lego zoo (1/2)

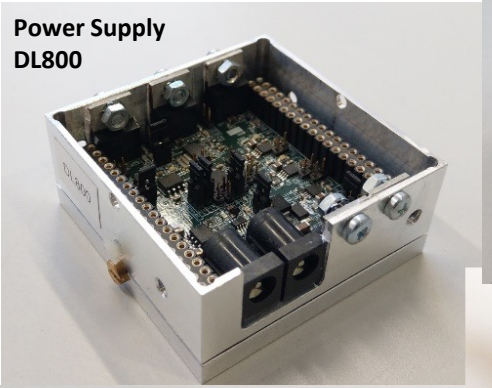
Power Supply
DL800

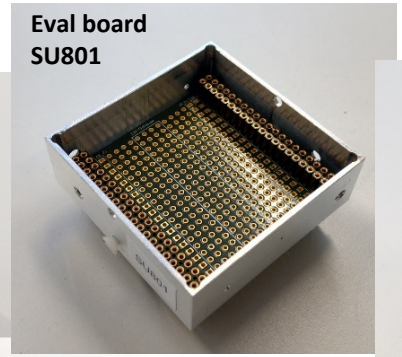
Eval board
SU801

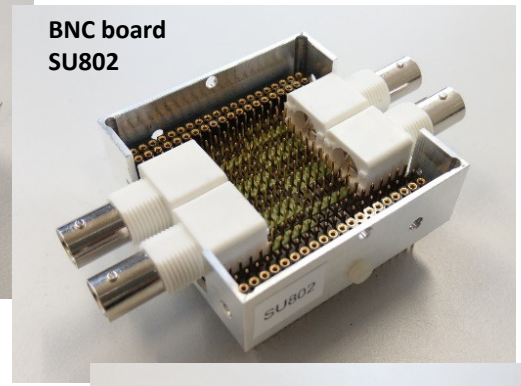
BNC board
SU802

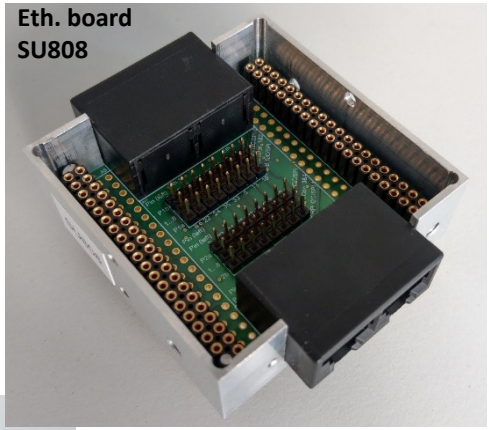
Eth. board
SU808

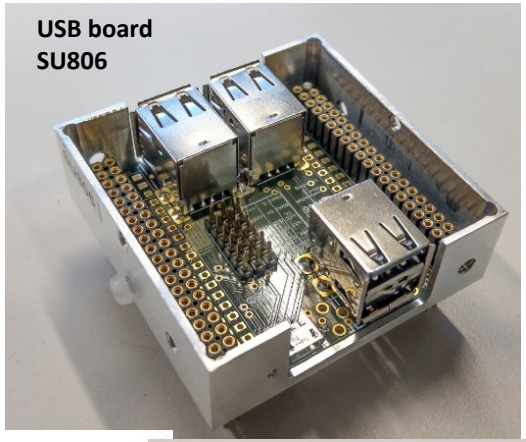
USB board
SU806

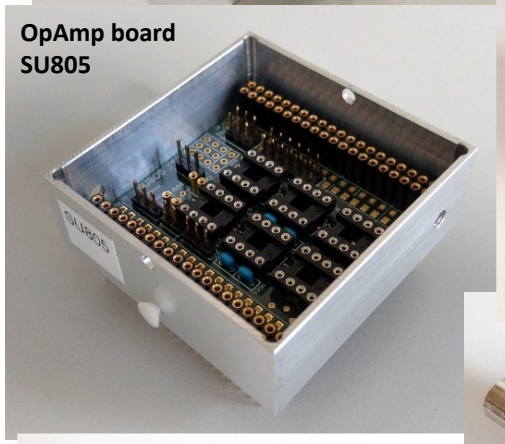
OpAmp board
SU805

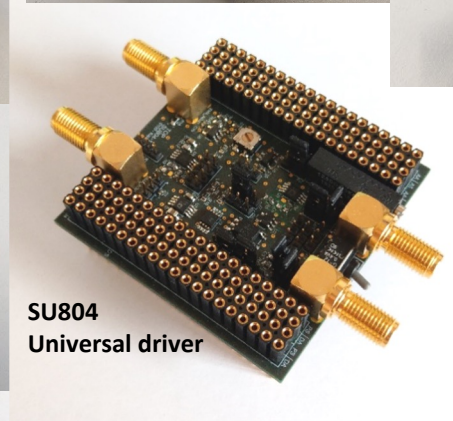
SU804
Universal driver

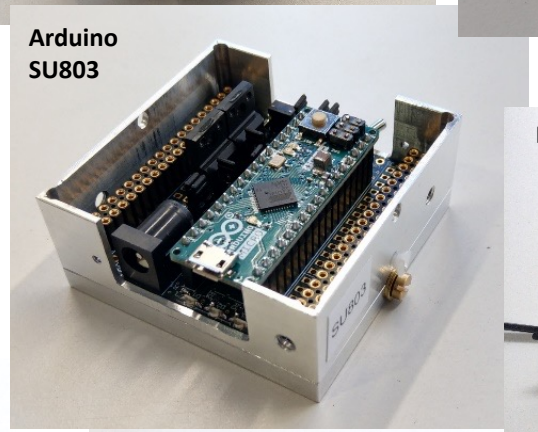
Arduino
SU803

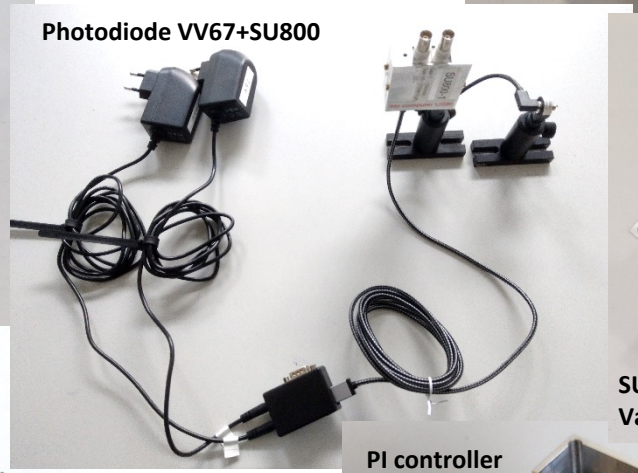
Photodiode VV67+SU800

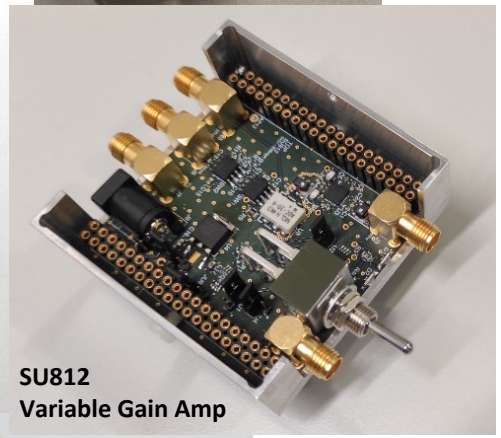
SU812
Variable Gain Amp

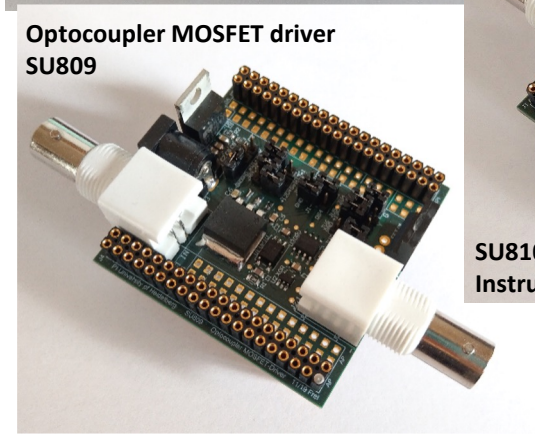
Optocoupler MOSFET driver
SU809

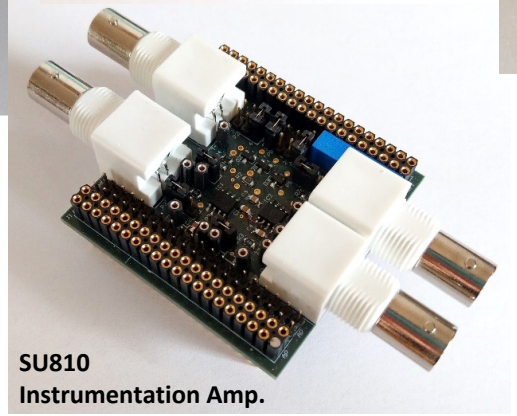
SU810
Instrumentation Amp.

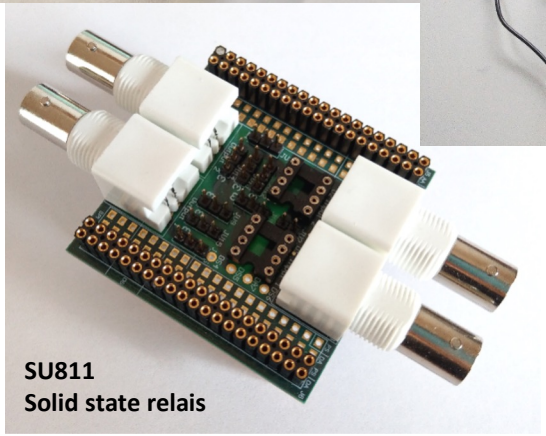
SU811
Solid state relais

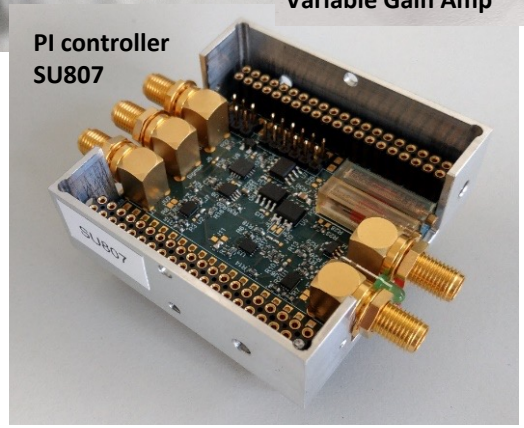
PI controller
SU807

e-lego module

Universal Driver – SU804

Board with 2 Non-Inverting OPs and Internal control voltage. Can be used as AOM driver to control rf Amplitude (Mixer) and Frequency (VCO). Option for TTL controlled switching between external and internal Voltage source

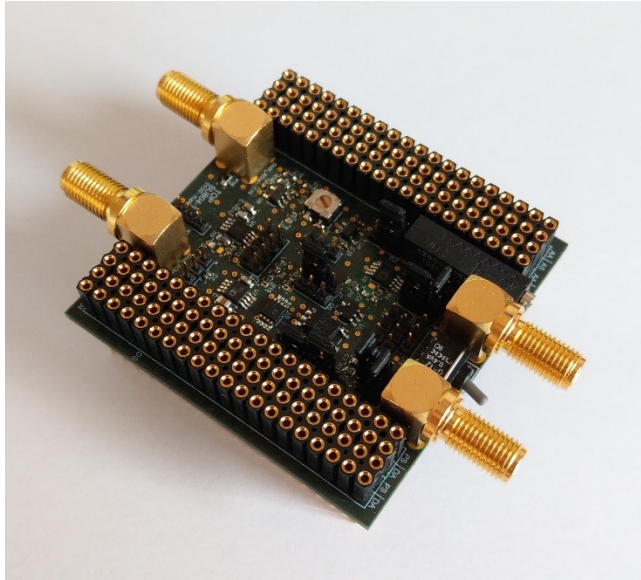

Recommended supplies: pos: 24V, neg: 7.5V on DL800 (light). Set Positive overvoltage protection to 26V on DL800

Recommended Rail Voltages: -Vxx=-2.7V, Vset=+19V. To be set on the DL800 (light) (Jumper '1.4'+6.4+6.4+3.2+1.6 [V] for Vset) and selected on SU804.

Input Voltage: 0, +10V with Analog switch, with manual switch: limits set by rails

Output Voltage: limits set by rails. Maximum Output Voltage with 50 Ω termination: 3.75 V (corresponds to 75mA)

BW: 90° Phase shift: 20 MHz
- 3dB Gain: 35 MHz

PSD: -140 dBm/Hz (single OP), -137 dBm/Hz (OP1+2 with Manual Sw.) , -140 dBm/Hz (OP1+2 with Analog Sw.)

Options:

2 Buffers

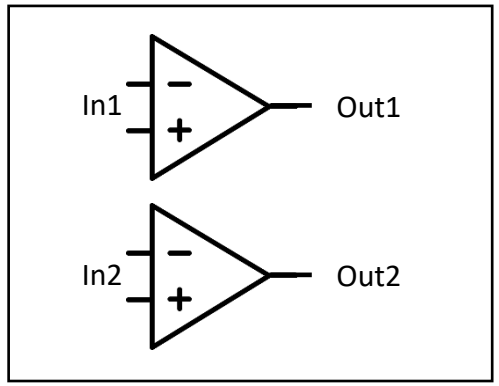

Application: e.g. Amplifier stage and 50 Ω driver for Redpitaya DACs

Voltage Control Ext./Internal with manual switch

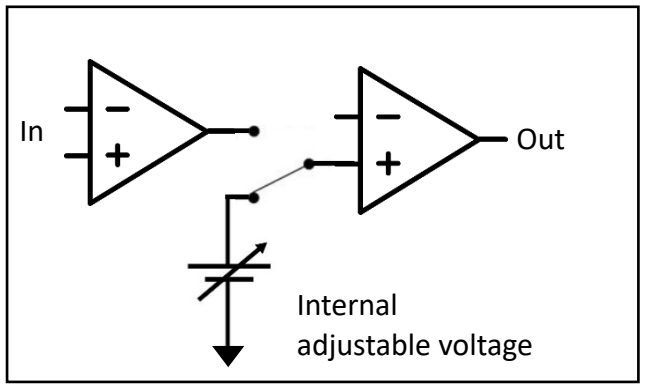

Application: e.g. Amplitude and Frequency control for AOM driver

Voltage Control with TTL controlled switch

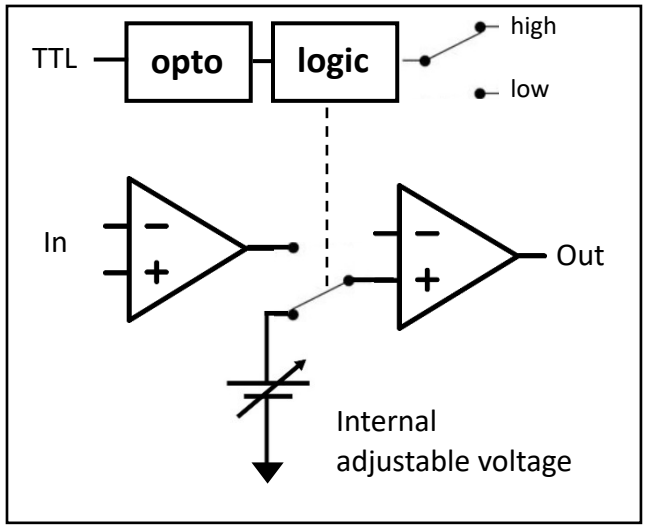

Where to find the e-lego stuff

e-lego manual

https://heibox.uni-heidelberg.de/f/5b7db6b8e09b43b0a7db/?dl=1

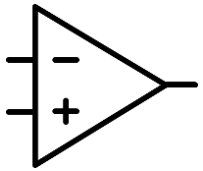

schematics of modules

\\pi2\geraete\Geraete\SU\

Q-Dr007

Your e-lego units or modules

\\pi2\microcontroller\QD-Ultracold\

e-lego stock

shelf opposite to the QD Testlab 99.410

G

Contact Gerhard or Oliver if you like to discuss about your e-lego project

The e-lego zoo (2/2)

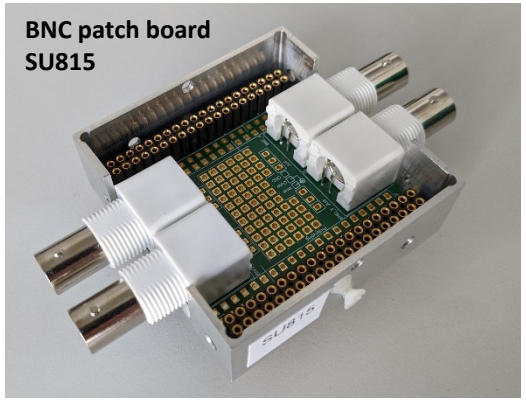

Power Supply Module DL800

app: any power supply

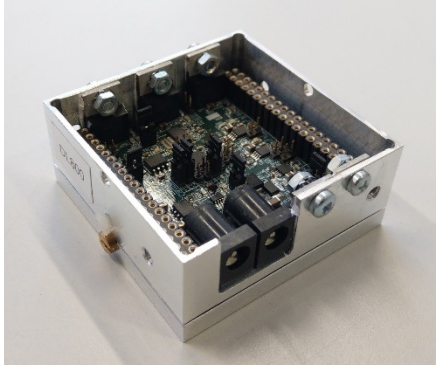

board with various linear regulators,

-Vp	resistor adjustable
-VXX	resistor adjustable
-5V,	
+3.3V,	
+5V,	
+8V,	
+12V,	
+VSET	**jumper-adjustable**
+VXX	resistor adjustable
+Vp	resistor adjustable

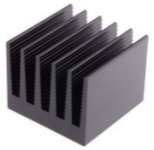

heatsinks available

RA: resistor adjustable, JA: jumper-adjustable

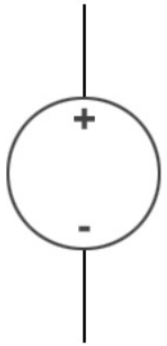

Special feature: select pos. voltage via jumper

Stepsize: 0.1 V, range 1.4 -20.5V

Blank Eval board SU801

app: built your own circuit

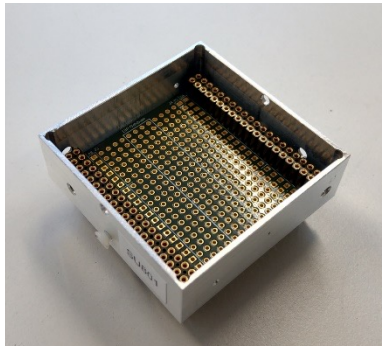

empty evaluation board with e-lego connectors and pads for DIP socket

example

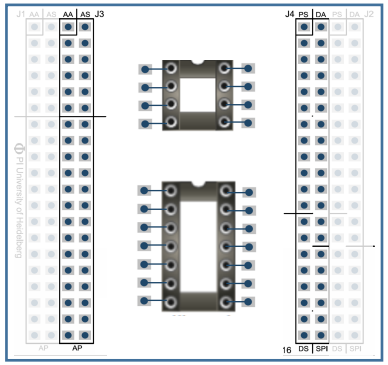

From: electronicdesign.com

BNC Connector board SU802

app: connection to devices

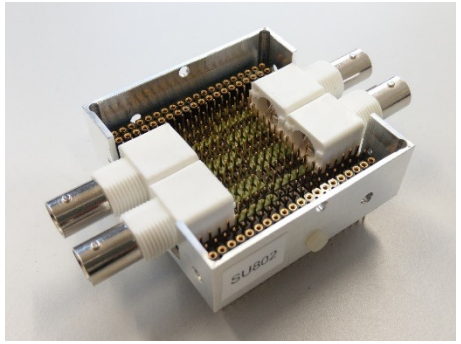

board with jumper pins to connect e-lego connectors to BNC In- and Outputs

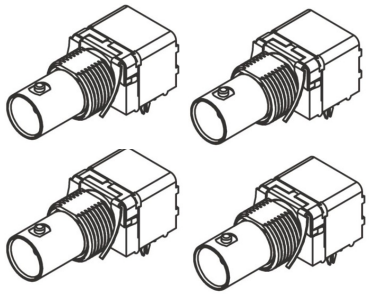

General OpAmp Module SU805

app: design your own OpAmp Circuit

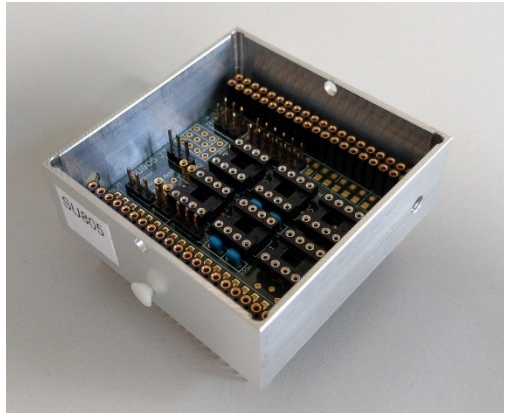

board with 2 Standard OpAmps Sockets (e.g. OP27) with freely configurable inputs and feedbacks by means of a resistor bank

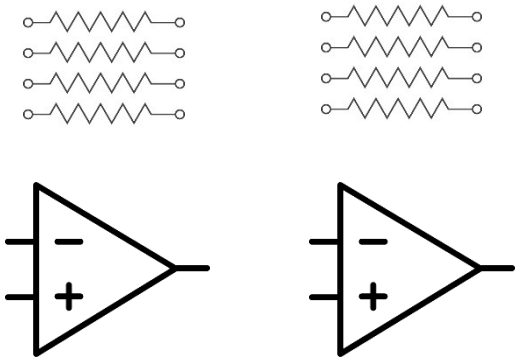

Microcontroller – Arduino Micro Module SU 803

app: digital, logic, interlock

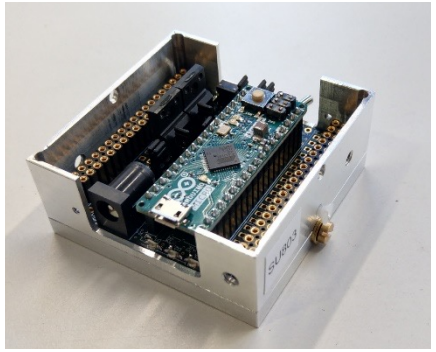

board with socket for Arduino Micro and two MOSFETs for switching currents

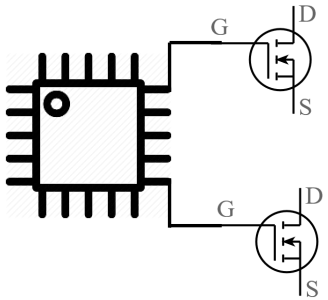

Universal driver SU804

app: variable voltage control. e.g. for AOMs

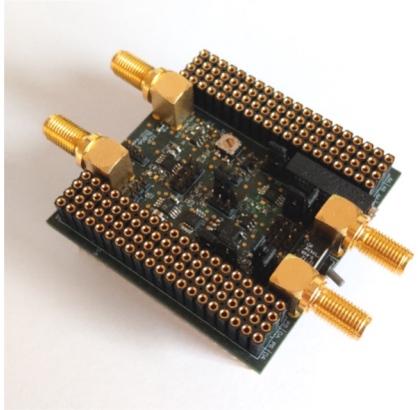

Board with 2 Non-Inverting OPs and Internal control voltage. Can be used as AOM driver to control rf Amplitude (Mixer) and Frequency (VCO). Option for TTL controlled switching between external and internal Voltage source

BW: 90° Phase shift: 20 MHz
- 3dB Gain: 35 MHz

PSD: -140 dBm / Hz

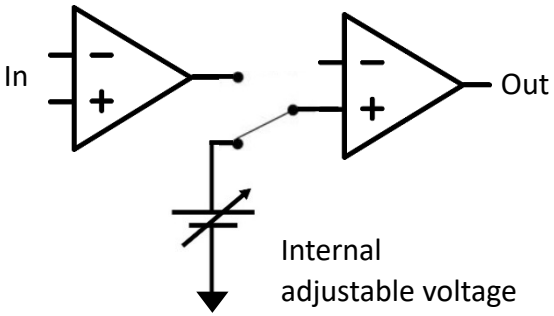

RJ45 Connector Module – SU808

app: connect SPI or others via Ethernet cable

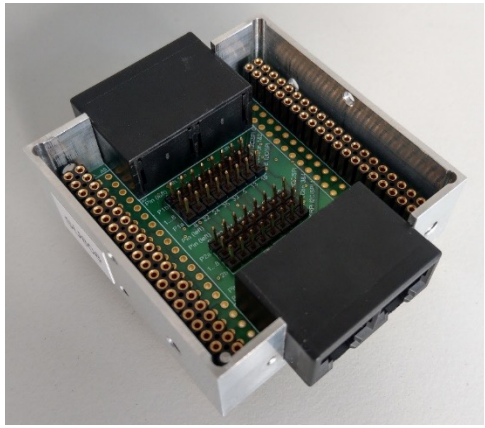

Board with RJ45 connectors to connect e.g. to I2C or SPI of Arduino.
Compatible to Raspberry Pi

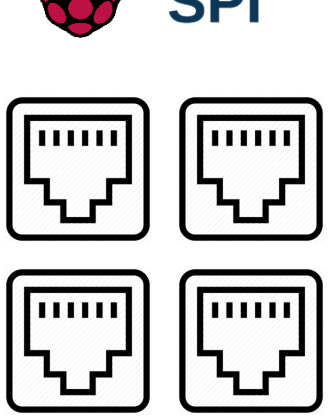

USB Connector module: SU806

app: connect power I/Os or others via USB

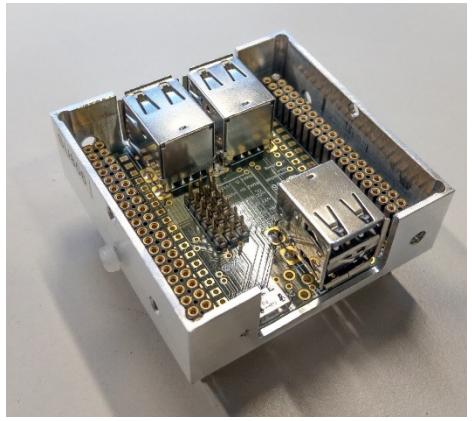

board with 6 USB A dual connectors and 1 Micro USB connector to distribute power among e-lego boards (e-lego standard see documentation)

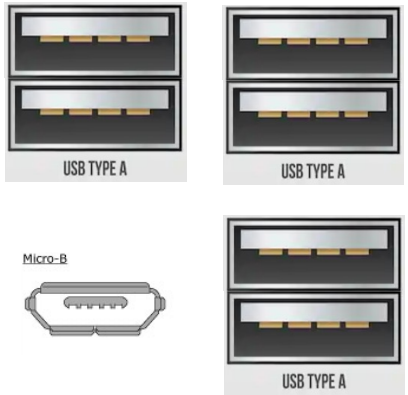

Photodiode
VV67 (Transimpedance Ampl.)
SU800 (Buffer Amplifier)

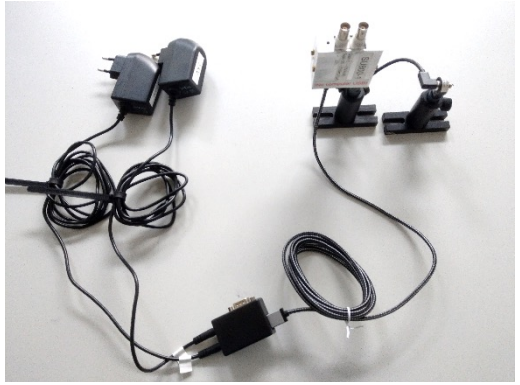

Ultra-compact, high BW, low noise Photodiode
Bandwidth DC-150 Mhz
Two outputs: low gain (x1) and high gain (x50)
Sensitivity: 3V/mA (low gain), 150mV / µA (high gain)
PSD: -140 dBm / Hz
Noise equivalent power: 8 pW/Hz$^{1/2}$

SU800: BW: 90° Phase shift: 150 MHz
- 3dB Gain: 600 MHz
PSD: -140 dBm / Hz

Power Adapter Q-PS003

Adapter from Hohlstecker / USB / Sub-D / BNC

Photodiode Fiber Mount

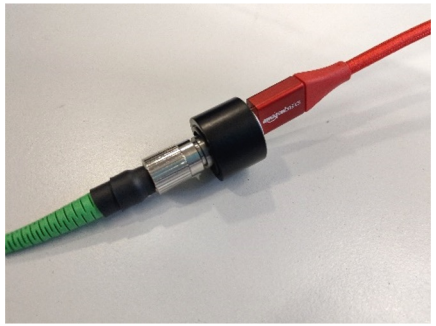

Mount to directly put the output light of an optical fiber (FC/APC) on an e-lego photodiode which is conencted via an USB cable to the SU800 Buffer Amplifier

Logarithmic Photodiode VV068

In test phase

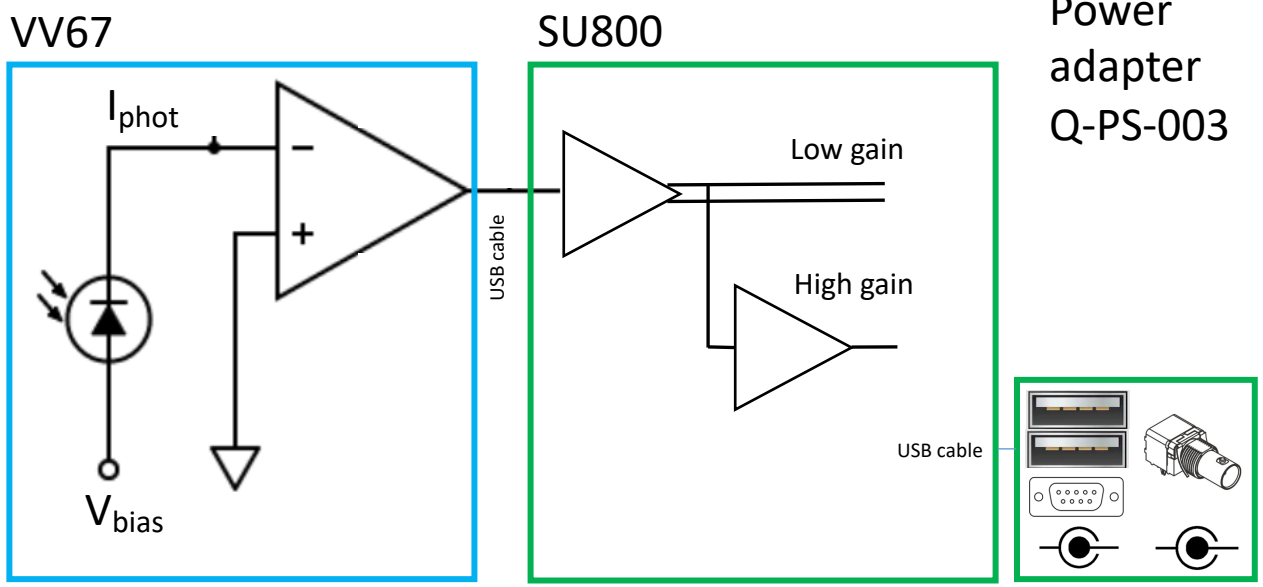

Optocoupler MOSFET driver SU809

app: Opto coupled TTL, Switching high currents

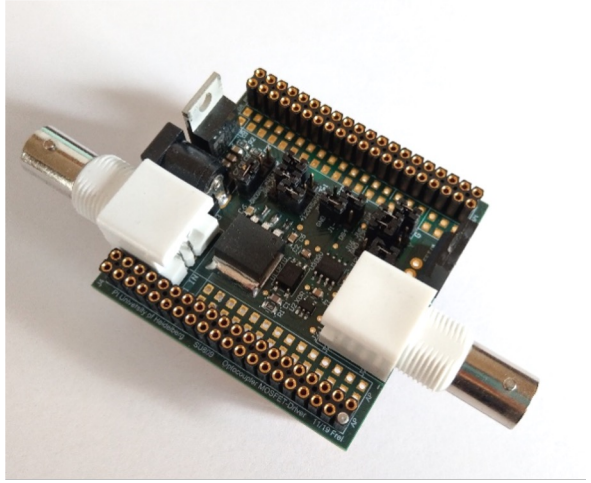

Opto coupled TTL input with inverter, FET driver and FET. Each component selectable with jumpers.

Delay: 100 ns
Risetime: 10 ns (10%-90%)
Jitter: <1ns

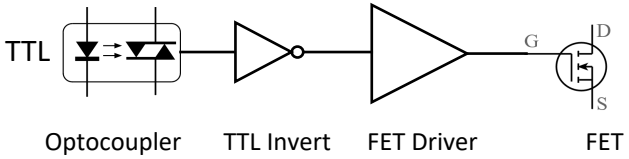

Instrumentation Amplifier SU810

app: amplifying small signals. Adding signals

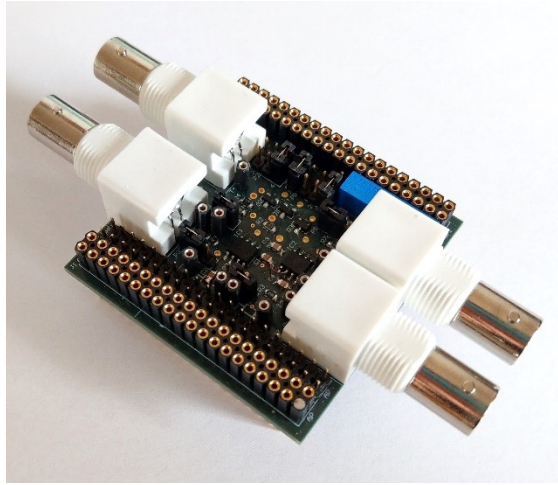

2 Instrumentation amplifiers with 10 MHz bandwidth. Can be also configured as Adder or Subtractor.

Gain 1: BW (90° Phase Shift): 5 MHz, (-3dB Gain):15 Mhz
PSD/Gain = 131 dBm/Hz
Gain 100: BW (90° Phase Shift):2 MHz, (-3dB Gain):8 Mhz
PSD/Gain = 155 dBm/Hz

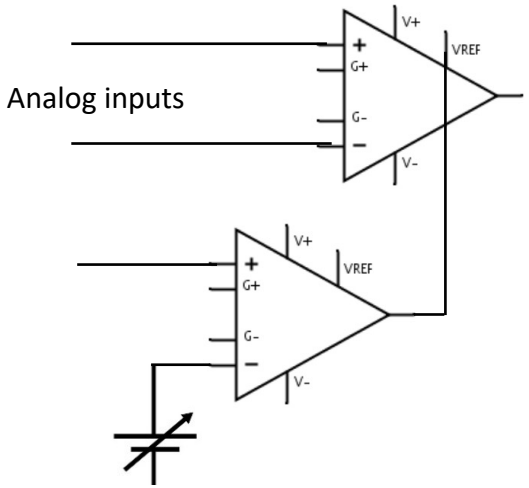

Solid state relais SU811

app: Isolated Solid state switch.

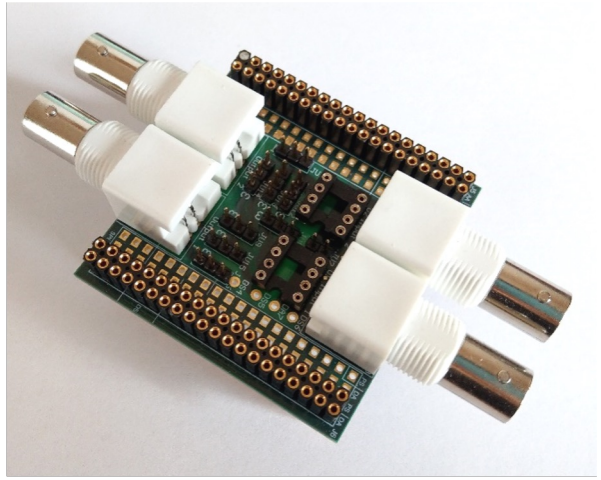

2 Solid state relais with different logic. Can be used to control interlocks

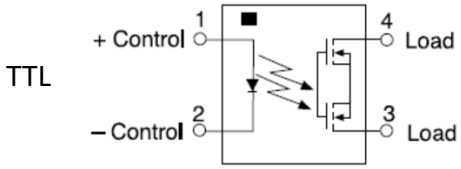

DC-DC Converter Q-PS004

2 channel Buck Boost Converter
Step UP / Down Voltage Regulator with current limit

Input: DC 5,5-30 V
Output: DC 0,5-30 V (Poti controlled)
Max current: 3A
Max Power: 35W
Addition: Load Resistor for setting up current limit (Poti controlled)

Noise spectral density <= 10µV /(Hz)$^{1/2}$

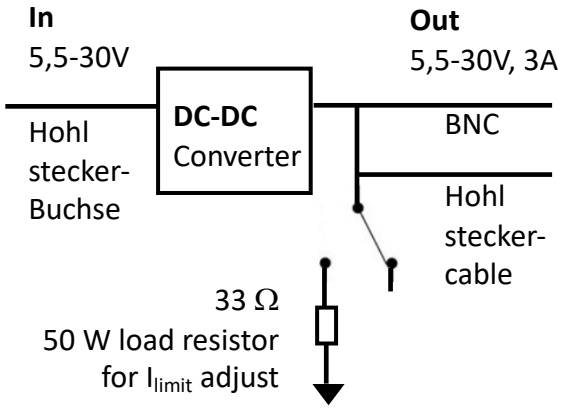

SU807 PI-Controller

app: control loops

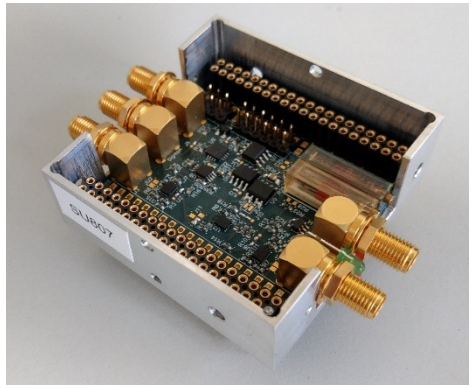

Analog PI controller
BW: 90° Phase shift: 20 MHz
- 3dB Gain: >40 MHz

PSD: -135 dBm / Hz

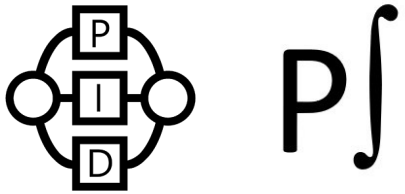

In test phase

Variable Gain Amplifier SU812

app: RF amplitude control & RF switch for AOMs

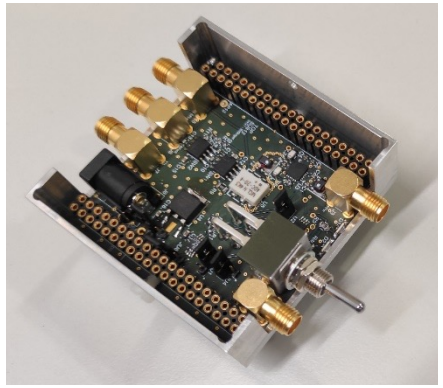

Variable Gain: -45 dB ... +10 dB
→ dynamical range: 55 dB

Input 1dB compression point: 3dBm
Isolation: 87 dB (switch off)

Modes, set by the manual switch

1) RF-switch controlled by TTL
2) Contineously ON at 10 dB gain
3) Switch off

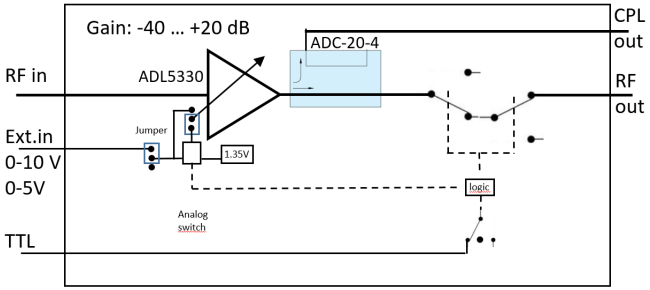

H-bridge driver SU813

24 bit ADC SU814

BNC Patch Board SU815

app: connect e-lego I/Os to BNC

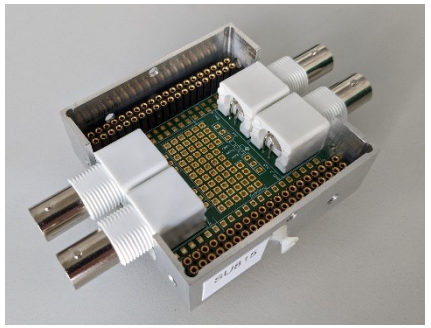

- 4 BNC connectors
- Pads for inner an outer pin of the BNC conncter for connecting to the e-lego I/Os
- Evaluation area in the center for putting additional components

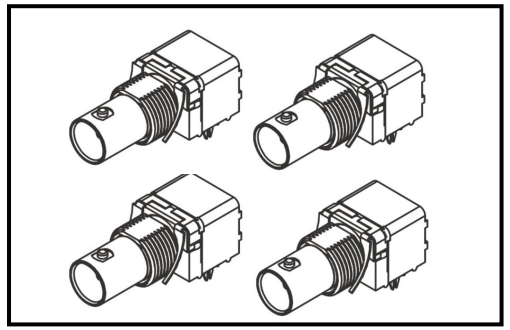

Ethernet Shield for Arduino Micro SU816

app: RF amplitude control & RF switch for AOMs

24 bit ADC SU814

E-lego AOM driver

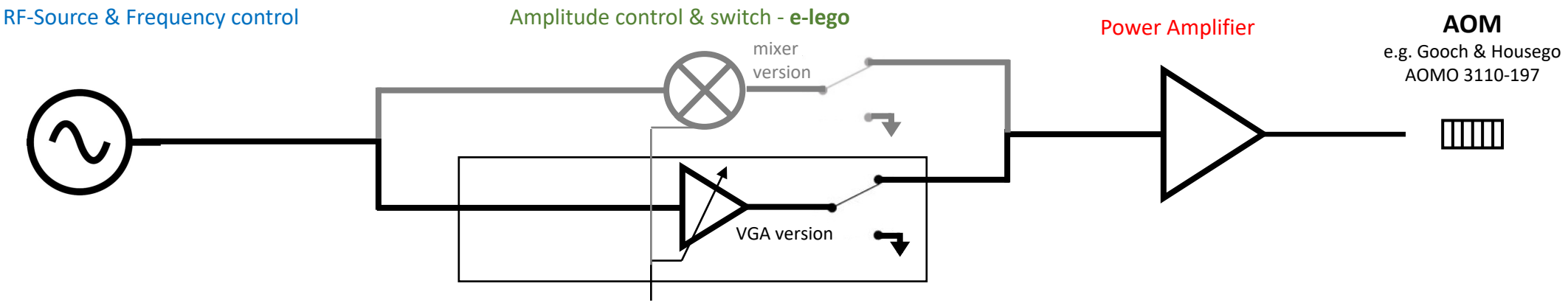

Waterflow interlock – Q-Ar004

e-lego

Manual
detailed description

List of developed electronics

Serial No.	Family	Type	Description	Versions
AS065	DDS	Arduino based communication board	Programming and communication board for DDS eval board AD9914, DDS with 1.2 GHz (1.7GHz max with 3.5 GHz ext. clock).	A: 5V trigger input, B: 3.3V trigger input
SU800	e-lego	Dual Channel Photodiode buffer	Buffer amplifier for high speed Photodiode with differential USB connector	
SU801	e-lego	DIP Experimental board	empty evaluation board with eLego connectors and pads for DIP socket	
SU802	e-lego	BNC Connector Board	board with jumper pins to connect eLego connectors to BNC In- and Outputs	
SU803	e-lego	Arduino Micro spreadout board	board with socket for Arduino Micro and two MOSFETs for switching currents	
SU804	e-lego	Universal driver board	Board with 2 Non-Inverting OPs and Internal control voltage, e.g. used as AOM driver to control rf Amplitude (Mixer) and Frequency (VCO)	
SU805	e-lego	General OpAmp Module	board with 2 Standard OpAmps Sockets (e.g. OP27) with freely configurable inputs and feedbacks by means of a resistor bank	
SU806	e-lego	USB Connector module (e.g. for power distribution from Q-PS003)	board with 6 USB A dual connectors and 1 Micro USB connector to distribute power among e-lego boards (e-lego standard see documentation)	
SU807	e-lego	PI controller	High bandwidth analog PI controller	
SU808	e-lego	Ethernet Connector Module	Board with RJ45 connectors to connect e.g. to I2C or SPI of Arduino or Raspberry Pi	
SU809	e-lego	Optocoupler MOSFET driver	Opto coupled TTL input with inverter, FET driver and FET socket. Each component selectable with jumpers	
SU810	e-lego	Instrumentation Amplifier	2 Instrumentation amplifiers with 10 MHz bandwidth. Can be also configured as Adder or Subtractor.	
SU811	e-lego	Solid state relais	2 Solid state relais with different logic. Can be used to control interlocks	
DL800	e-lego	Power Supply board	board with various linear regulators, -Vp (RA), -VXX (RA), -5V, +3.3V, +5V, +8V, +12V, +VSET (JA),+VXX (RA), +Vp (RA). RA: resistor adjustable, JA: jumper-adjustable	
DL800 light	e-lego	Power Supply board	board with linear regulators, -5V, +5V, +12V, +VSET (JA)	
Q-PS003	e-lego external	Adapter	Adapter from Hohlstecker and Sub-D to USB	1,2,3,4
VV066	e-lego external	Photodiode Amplifier 1"	Compact, high BW, low noise Photodiode Transimpedance Amplifier DC-150 Mhz	
VV067	e-lego external	Photodiode Amplifier 1/2"	Ultra-compact, high BW, low noise Photodiode Transimpedance Amplifier DC-150 Mhz	A, B, C for different capacities of the Photodiodes

https://www-intern.physi.uni-heidelberg.de/Infos/ultracold_wiki/index.php/List_of_developed_electronics

E-lego additional information

Stock

- The modules are stored in boxes in the shelf in the basement (opposite to the QD Testlab 99.410)
- The boxes should remain in the shelf, only take components out of it
- Let the Gerhard know when there are less than 2 modules of each kind left.

Modifications

- Note a component exchange or the addition of a component on an empty pad on the case of the board.
- For all further modification create a sub-version on the ew-server and note the modification:

\\147.142.16.140\microcontroller\QD-Ultracold\Q-El - e-lego

New design:

- Ask the workshop to implement your design
- In case you like to start your own development you find an Altium template for the modules on the server:

Where to find the drawings for the cases:

pi2 server:

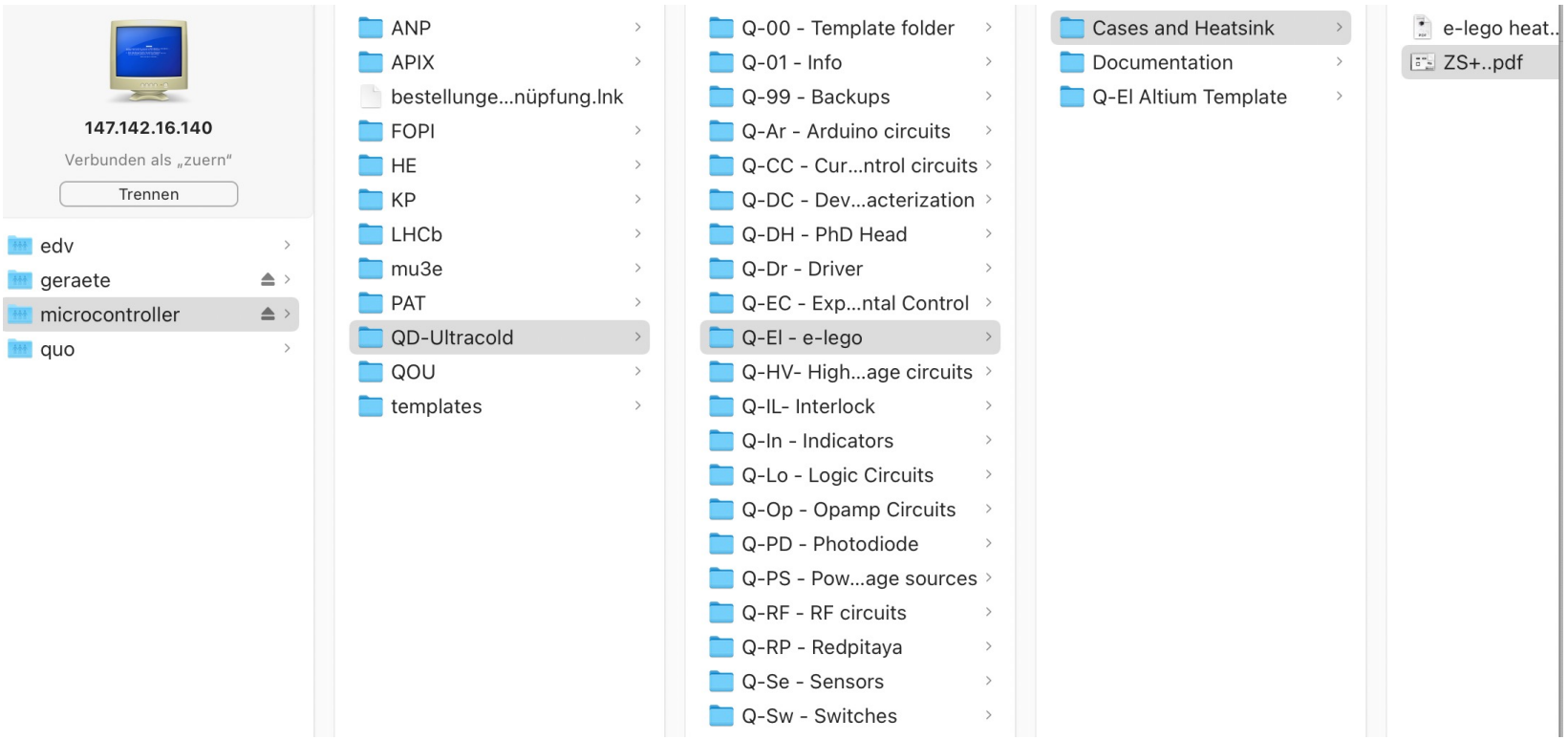

e-lego module

Power Supply Module: DL 800

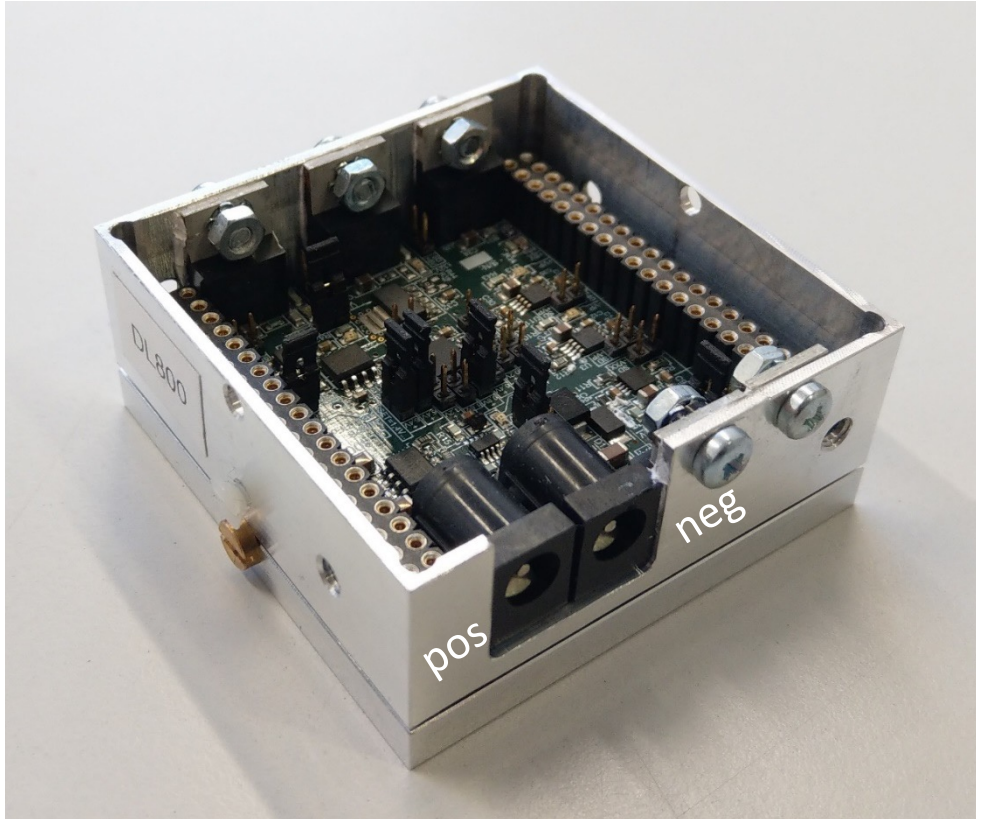

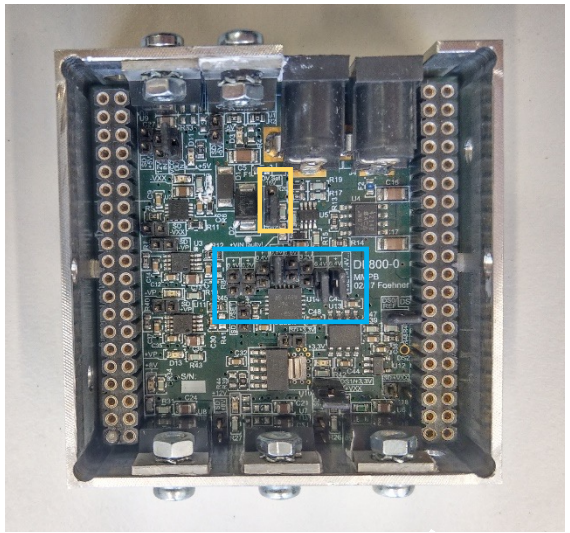

heatsinks available

board with various linear regulators,

-Vp	resistor adjustable
-VXX	resistor adjustable
-5V,	
+3.3V,	
+5V,	
+8V,	
+12V,	
+VSET	**jumper-adjustable**
+VXX	resistor adjustable
+Vp	resistor adjustable

RA: resistor adjustable, JA: jumper-adjustable

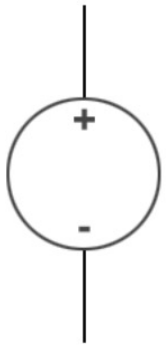

Special feature: select pos. voltage via jumper

Stepsize: 0.1 V, range 1.4 -20.5V

Example: 15V = (1.4)+6.4+6.4+0.8 V

Features:

- Various possitive and negative voltage sources
- **Jumper selectable possitive source** (indicated by blue box)
- Maximum supply voltage for negative sources (16 V)
- **Overvoltage protection for possitive supplies selectable by jumper either to 16V or 26V** (indicated by yellow box)

application: any power supply you need

\\147.142.16.140\geraete\Geraete\DL\DL800_Modular_Multi_Purpose_Board

Power Supply Module: DL 800

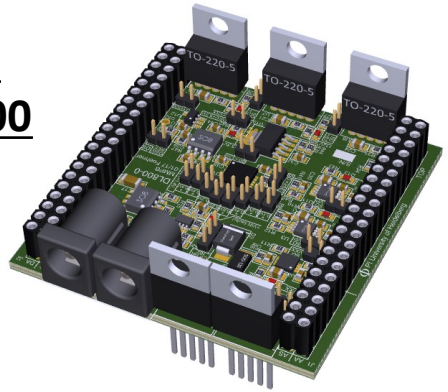

Recommended supplies **(Plug in pos. supply first)**

Neg: 7.5V (16 V Max. If above, zener diode will draw current and lead to a braking of the fuse)

Pos: 15V (with 16 V protection) or 24V (with 26V protection – selected via jumper)

-VCC_DL
-VXX (-2.7 | or
-5V
-VP(-6V factory)
GND
+VP(+6V factory)
+5V
+8V
+VSET(+15V or)
+12V
+VXX (+18V or)
+VCC_DL
DS0/REF
DS1/+3,3V

The DL800 is a power supply board which provides the following voltages:

- The - 5V, +5V, +8V, + 12V are **standard fixed linear regulators up to 3A.**
- The –VXX and +VXX are **standard adjustable linear regulators up to 3A.** The values can be set by setting R6 and R23

- - Vxx: R6 = (-Vxx/-1.22V -1)/(1/12.1kΩ+30nA/-1.22V) → www.google.com/search?q=(-2.7/-1.22 -1)/(1/12100-(-1)*30e-9/-1.22)) **(default: -2.7V)**

- +VXX: R23= 150Ω x (+Vxx/1.240-1) → www.google.com/search?q=150*(18/1.240-1) **(default: 18V)**

- The –VP and +VP are **precission adjustable linear regulators up to 150mA**.

- - VP: R8= 10KΩ x (-Vp/1.174-1V -1) → www.google.com/search?q=10000*(6/1.174-1) **(default: -6V)**

- +VP: R41= 10KΩ x (+Vp/1.185V -1) → www.google.com/search?q=10000*(6/1.185-1) **(default: +6V)**

- The +Vset is a convenient **precission adjustable positive lineare regulator up to 1A**. The output voltage can be set by the jumpers U14 to U20 and U22.

- +Vset= 1.4V + Sum (Jumper Values) (default: 15V) → Select via the jumper: Vset=1.4V + Jumper Select + Jumper select+...

- It provides a **10V reference voltage** (9 ppm/K, initial accuracy +-0.1%, 10 µV p-p (0.1 Hz to 10.0 Hz)) with a Buffer (OP192) for up to 65mA
- A **3.3V supply** up to 1.5A.
- -VCC_DL and +VCC_DL are the voltages of the used external power supplies
- **Fuses of 3A** (F1 – negative, F2 possitive supply) protect against overcurrent
- There is an **input voltage selection** to protect against overheating: In the standard setting the device switches off above 16V input indicated by red LED (Vfoult) It can be changed by the Jumper OV set to 26 V.
- All linear regulators which are not used can be switched off by at **Shuttdown Jumper** (SD)
- **Overvoltage protection**

Power Supply Module: DL 800

light

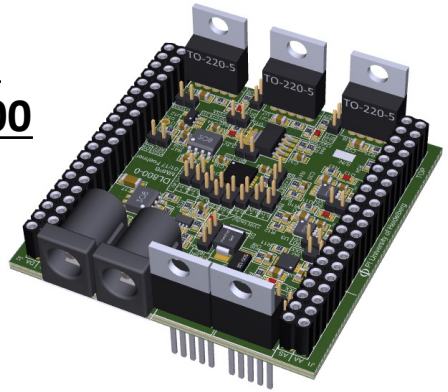

Recommended supplies **(Plug in pos. supply first)**

Neg: 7.5V (16 V Max. If above, zener diode will draw current and lead to a braking of the fuse)

Pos: 15V (with 16 V protection) or 24V (with 26V protection – selected via jumper)

The DL800 is a power supply board which provides the following voltages:

-VCC_DL
-VXX (-2.7
-5V
~~-VP~~
GND
~~+VP~~
+5V
+8V
+VSET(+15V any)
+12V
~~+VXX (+18V any)~~
+VCC_DL
DS0/REF
DS1/+3,3V

- The - 5V, +5V, ~~+8V,~~ + 12V are **standard fixed linear regulators up to 3A.**
- The –VXX ~~and +VXX~~ are **standard adjustable linear regulators up to 3A.** The values can be set by setting R6 and R23

- - Vxx: R6 = (-Vxx/-1.22V -1)/(1/12.1kΩ+30nA/-1.22V) → www.google.com/search?q=(-2.7/-1.22 -1)/(1/12100-(-1)*30e-9/-1.22)) **(default: -2.7V)**

- +VXX: R23= 150Ω x (+Vxx/1.240-1) → www.google.com/search?q=150*(18/1.240-1) **(default: 18V)**

- ~~The –VP and +VP are **precission adjustable linear regulators up to 150mA.**~~

- - VP: R8= 10KΩ x (-Vp/1.174-1V -1) → www.google.com/search?q=10000*(6/1.174-1) **(default: -6V)**

- +VP: R41= 10KΩ x (+Vp/1.185V -1) → www.google.com/search?q=10000*(6/1.185-1) **(default: +6V)**

- The +Vset is a convenient **precission adjustable positive lineare regulator up to 1A**. The output voltage can be set by the jumpers U14 to U20 and U22.

- +Vset= 1.4V + Sum (Jumper Values) (default: 15V)

- ~~It provides a **10V reference voltage** (9 ppm/K, initial accuracy +-0.1%, 10 µV p-p (0.1 Hz to 10.0 Hz)) with a Buffer (OP192) for up to 65mA~~
- ~~A **3.3V supply** up to 1.5A.~~
- -VCC_DL and +VCC_DL are the voltages of the used external power supplies
- **Fuses of 3A** (F1 – negative, F2 possitive supply) protect against overcurrent
- There is an **input voltage selection** to protect against overheating: In the standard setting the device switches off above 16V input indicated by red LED (Vfoult) It can be changed by the Jumper OV set to 26 V.
- All linear regulators which are not used can be switched off by at **Shuttdown Jumper** (SD)
- **Overvoltage protection**

Jumper Settings DL800

Dienstag, 25. April 2017 15:02

blue: factory jumper settings!

red: optional settings

Input Voltage protection: $+V_{cc}$-min: 5.5V
$+V_{cc}$-max: 16V (26V)

select input voltage for 5V regulator

SD-jumper: shutdown to switch off individual linear regulators.

DL 800 provides the following Voltages

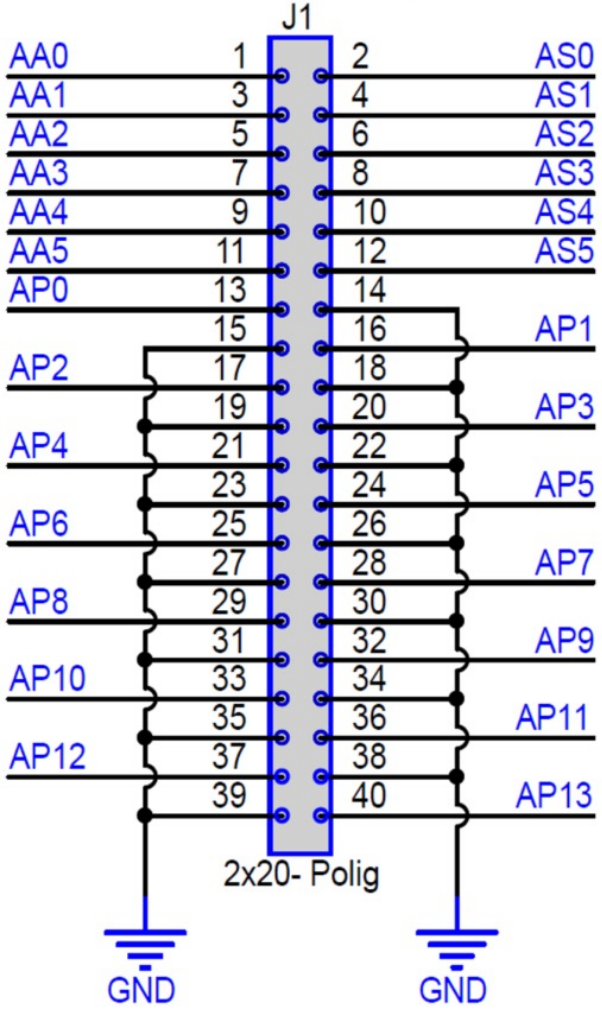

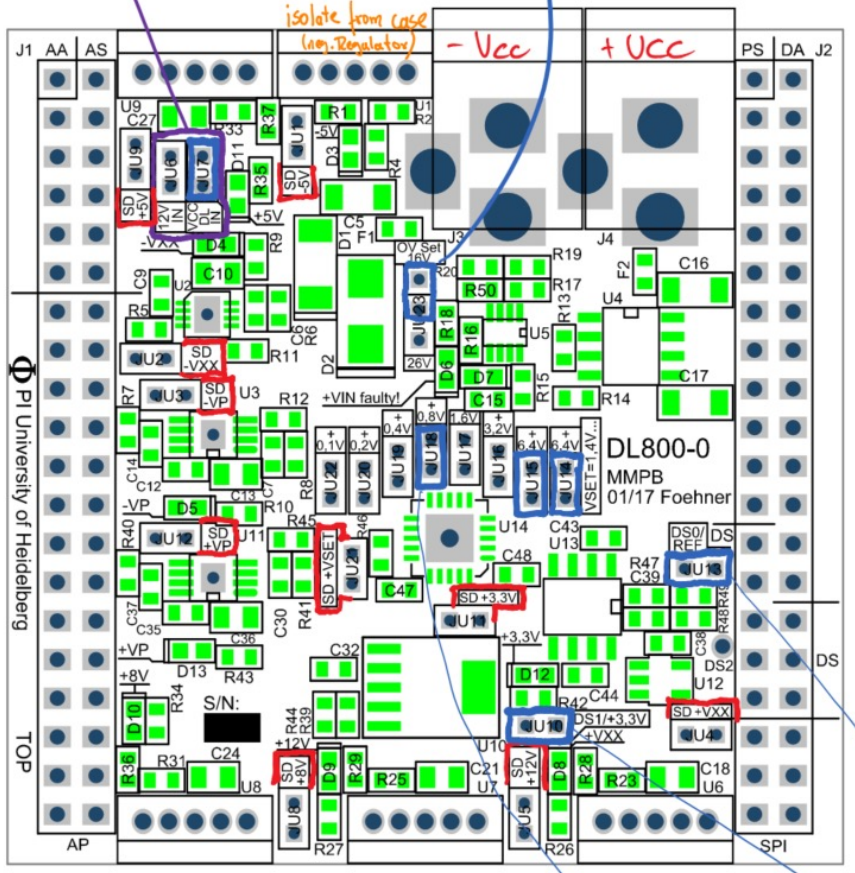

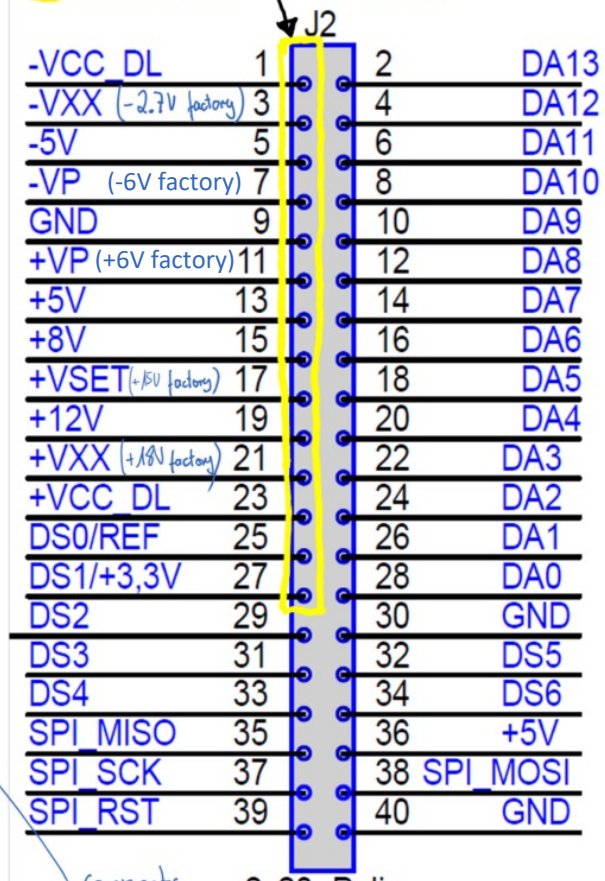

connects Ref-source to pin-connector

connects 3.3V source to pin-connector

Vset factory: 15V

Power Supply Module: DL 800 light

DL800 light layout

Dienstag, 25. April 2017 15:02

Same as DL800, providing only **-5V, +5V, +12V,**
the resistor-adjustable negative Voltage **-VXX**
and the Jumper-adjustable positive Voltage **+VSET**

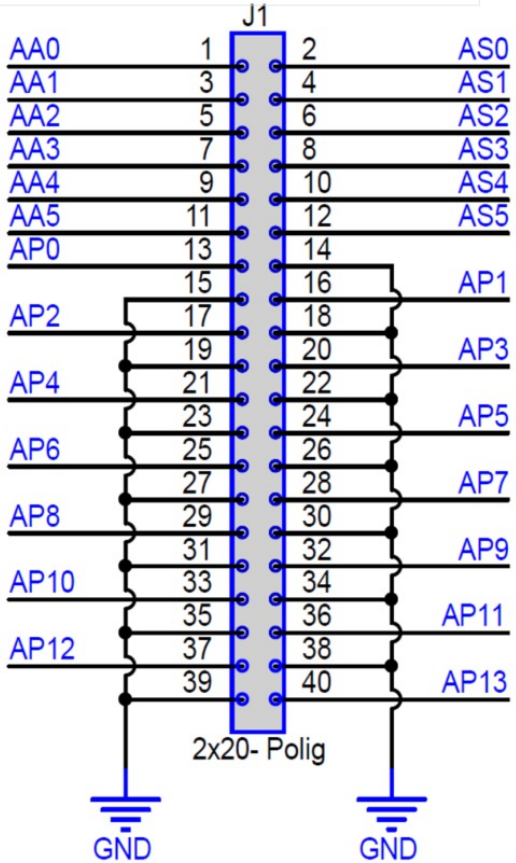

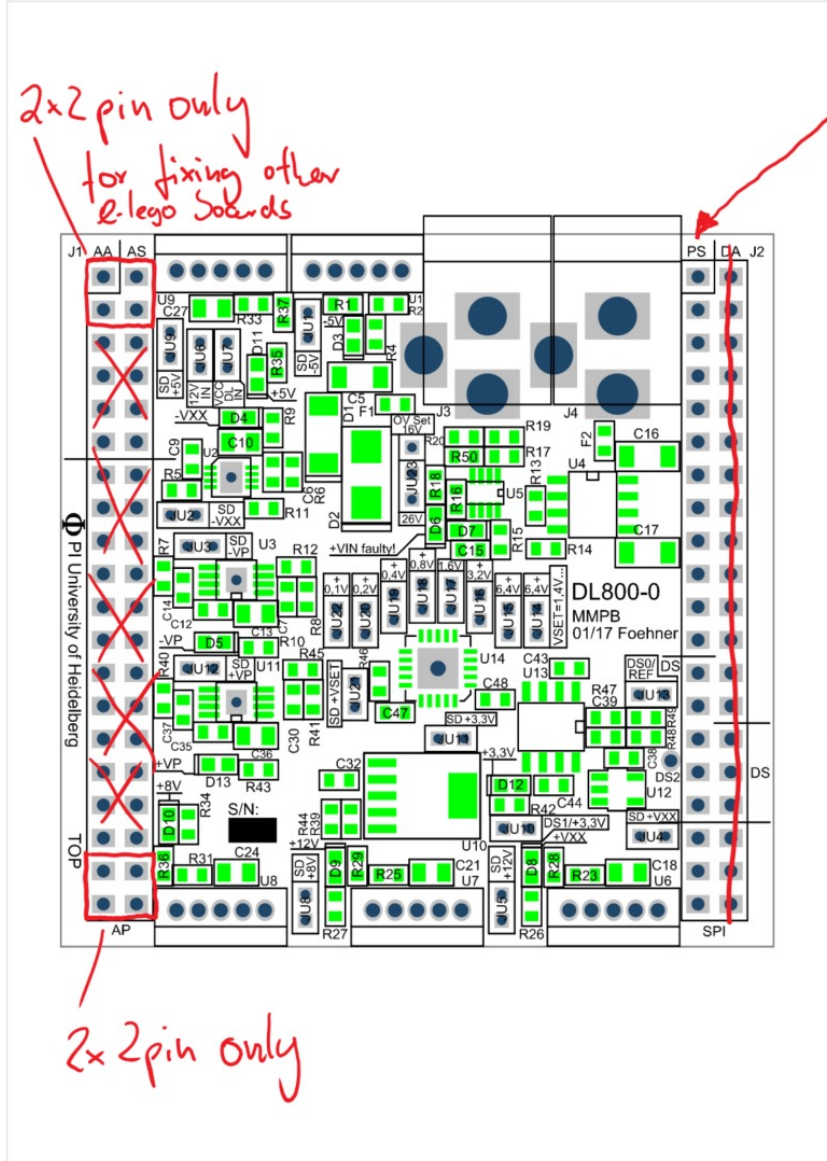

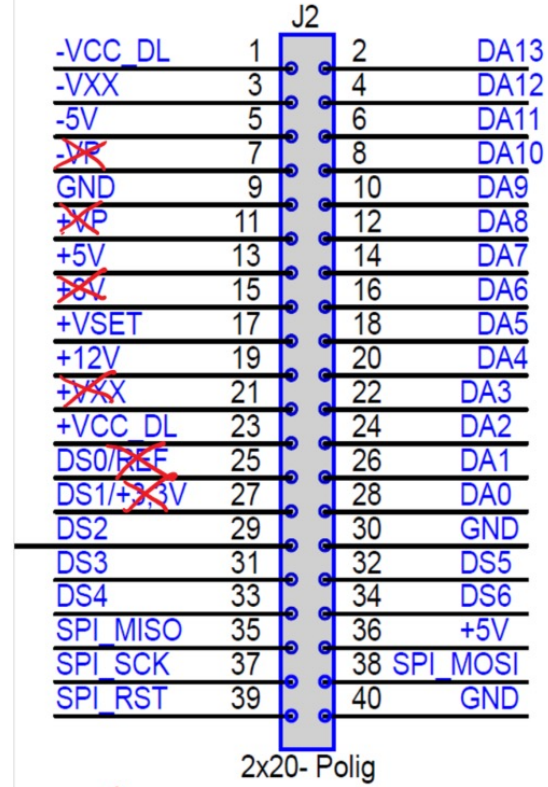

components for
$-U_P$, $+U_P$, $+8V$,
$+U_{XX}$, Ref, $+3.3V$
not placed on PCB

Same factory Jumper Setting as for DL800

Noise: Power Supply Module DL 800 - Linear freq-scale

VP Regulator versus Wall Plug Switching power Supply [units: dBm/Hz]

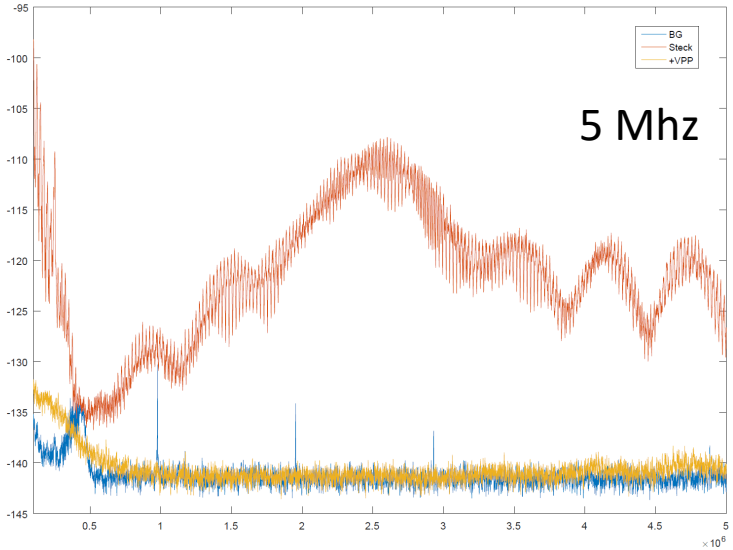

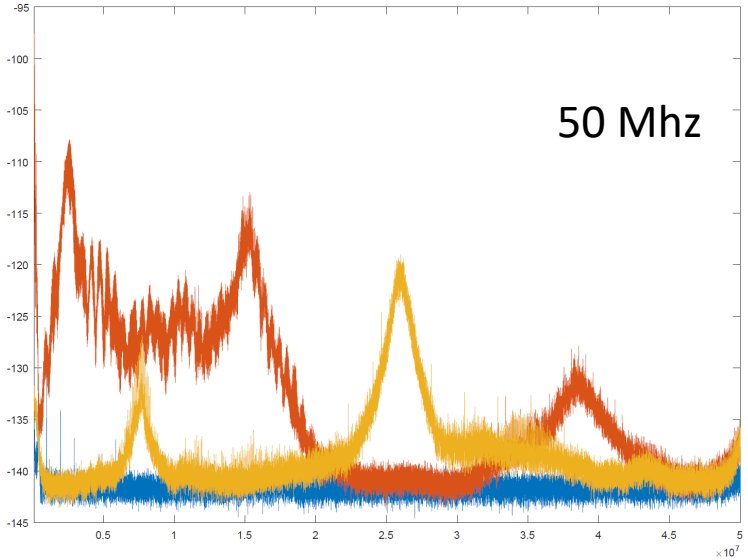

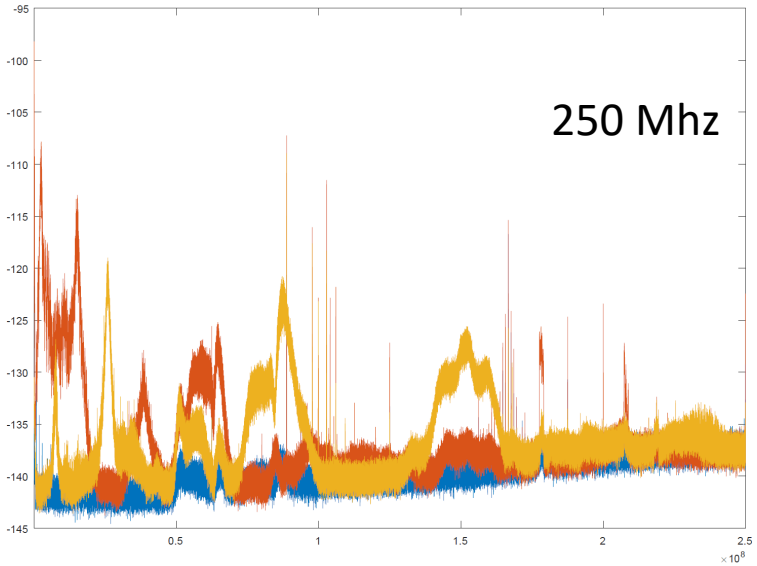

VSet Regulator [units: dBm/Hz]

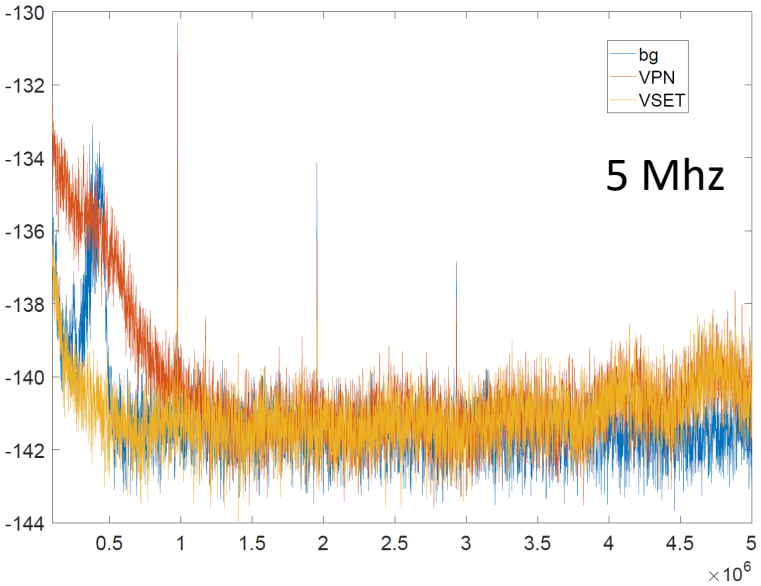

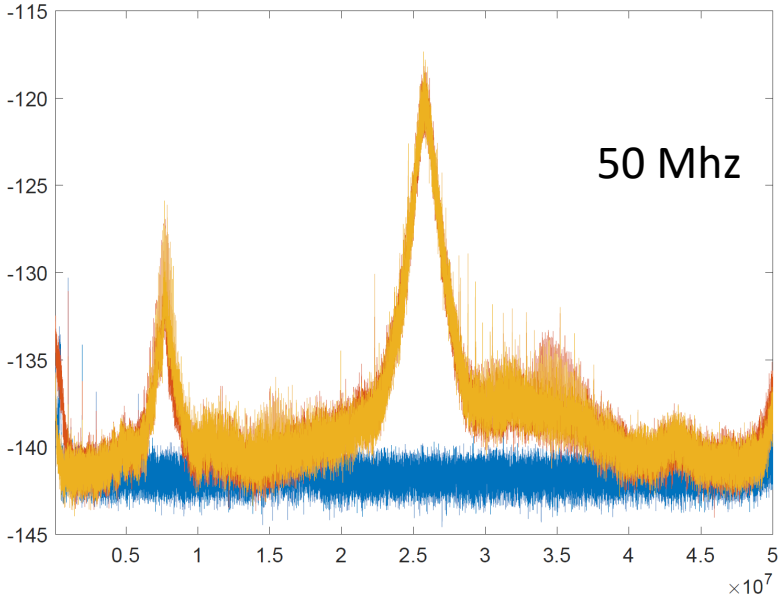

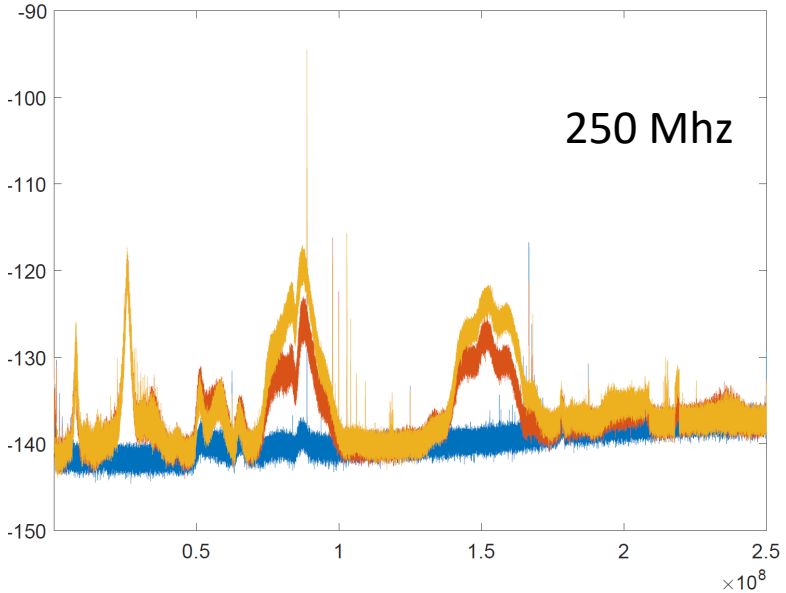

Noise: Power Supply Module DL 800 - Log freq-scale

Wallplug Power Supply vs. Vset

PSD

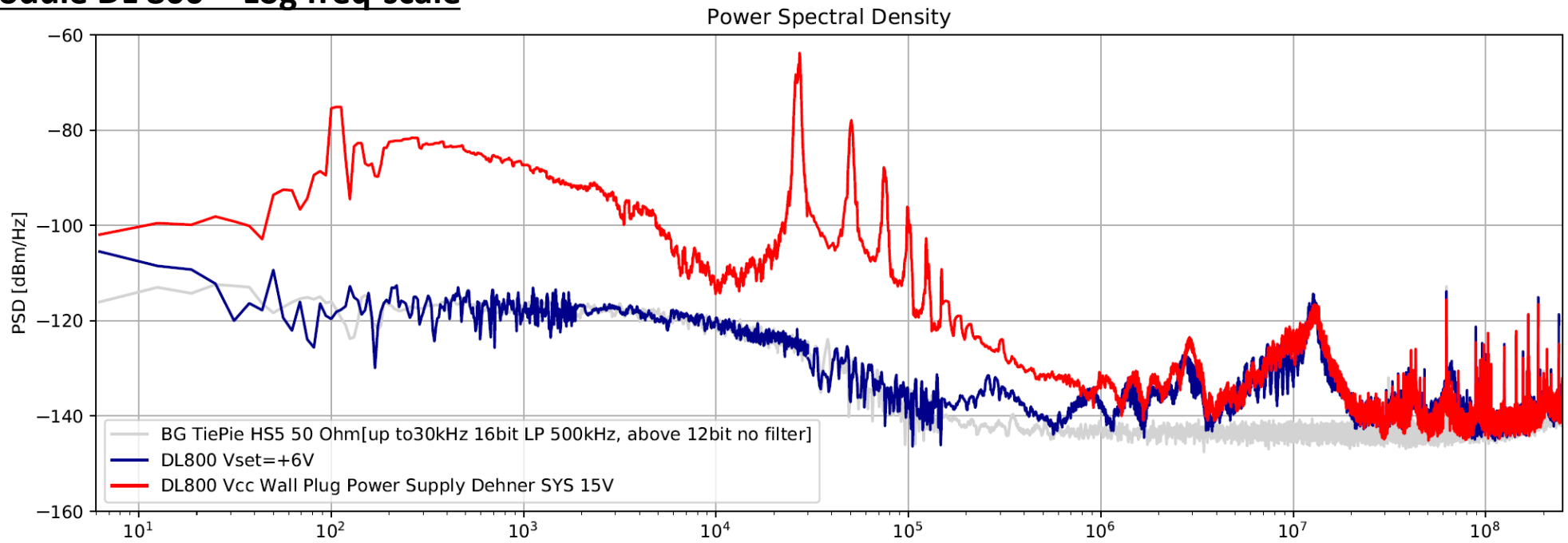

VNSD

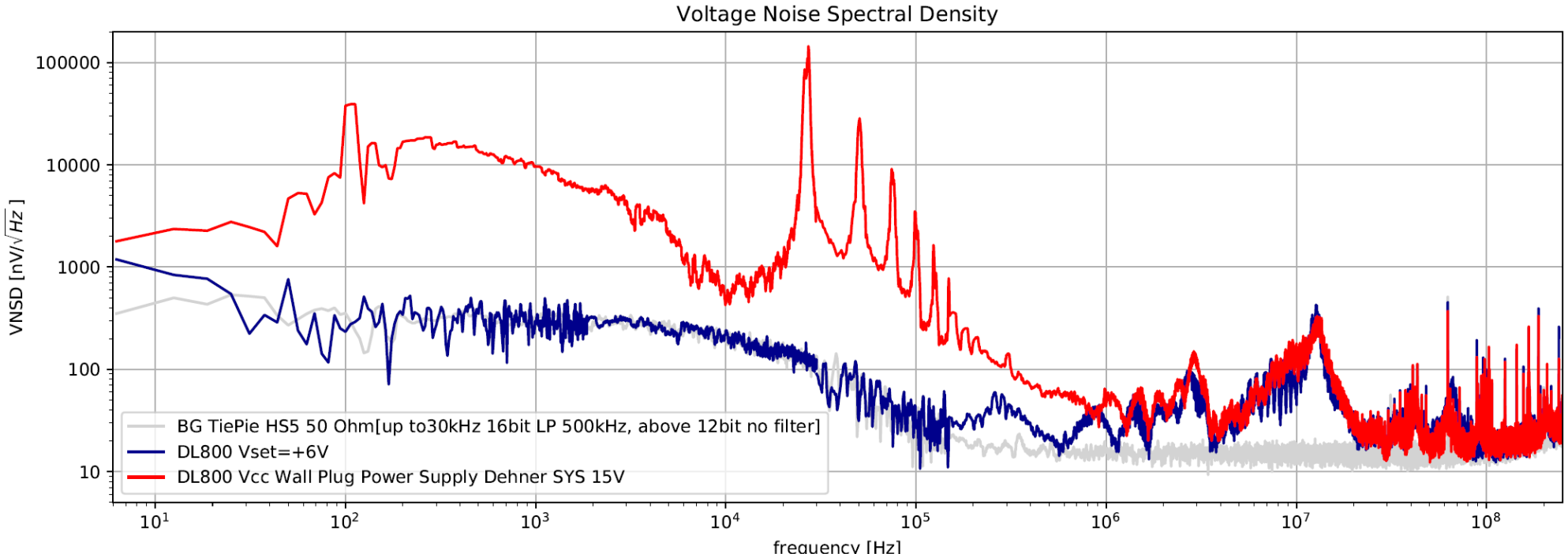

+5V, +Vp, +Vset

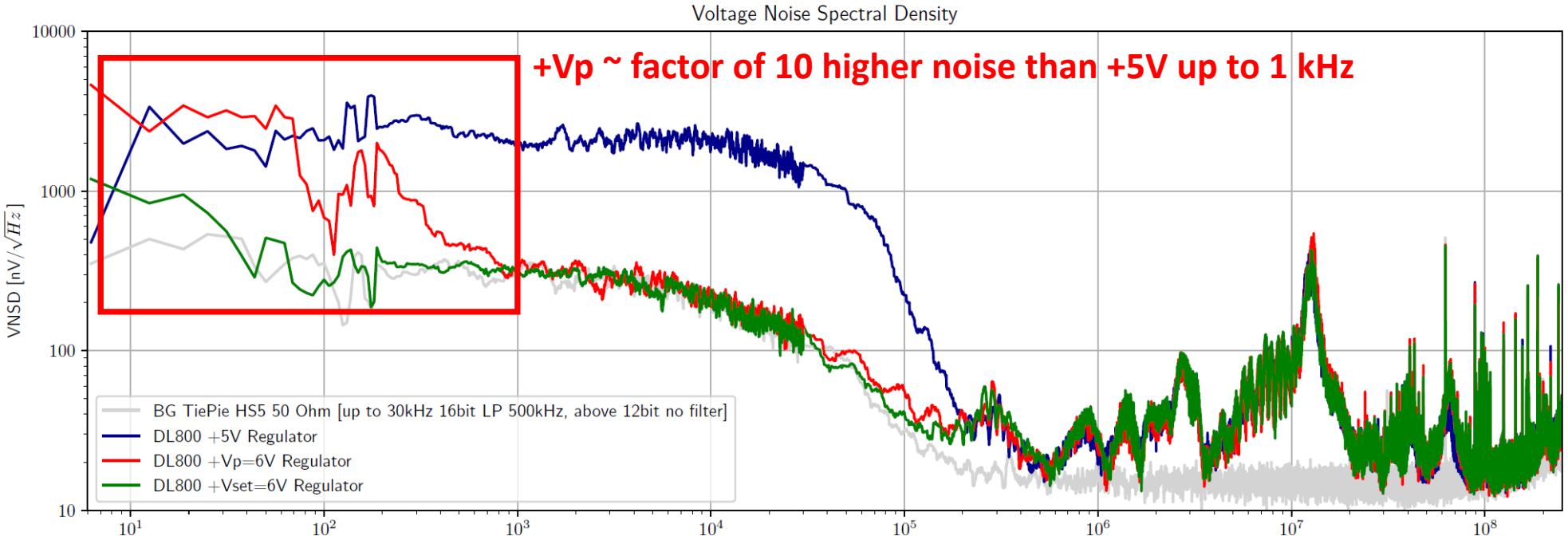

-5V, -Vp, -2.7V

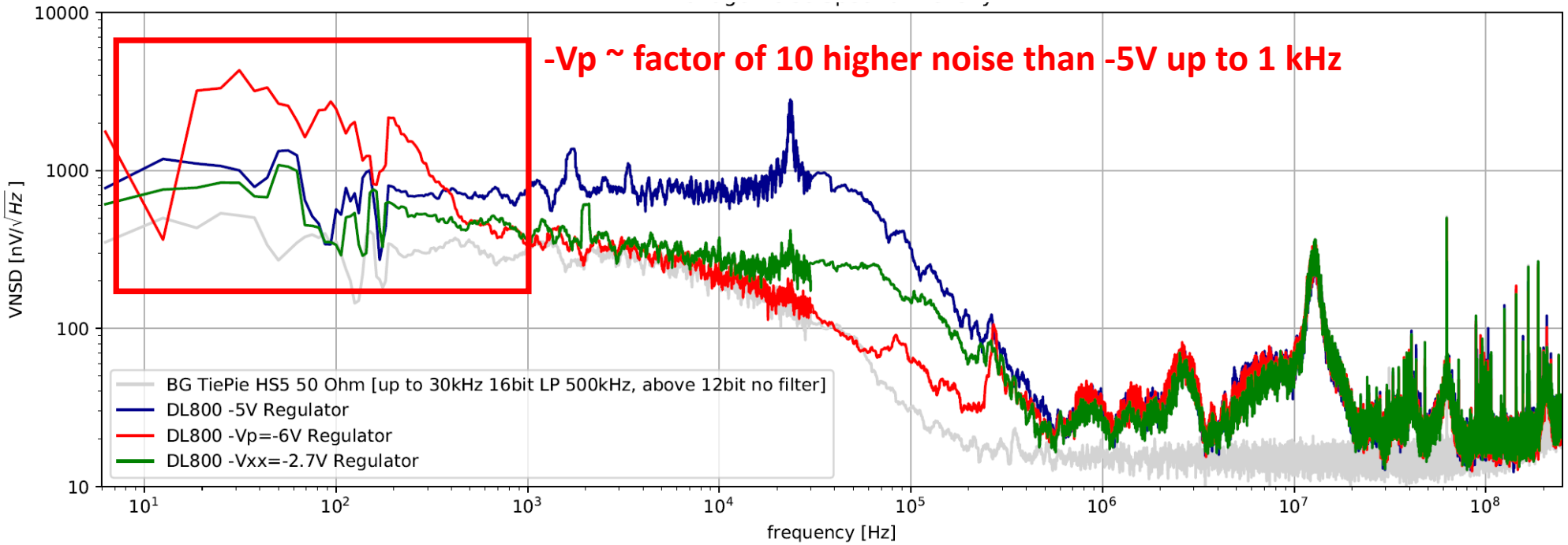

LT3083 (datasheet)

MIC2930 (measured)

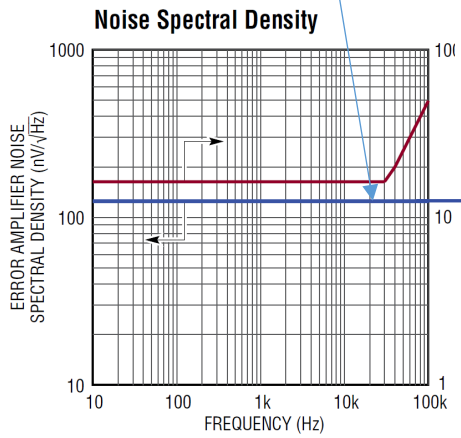

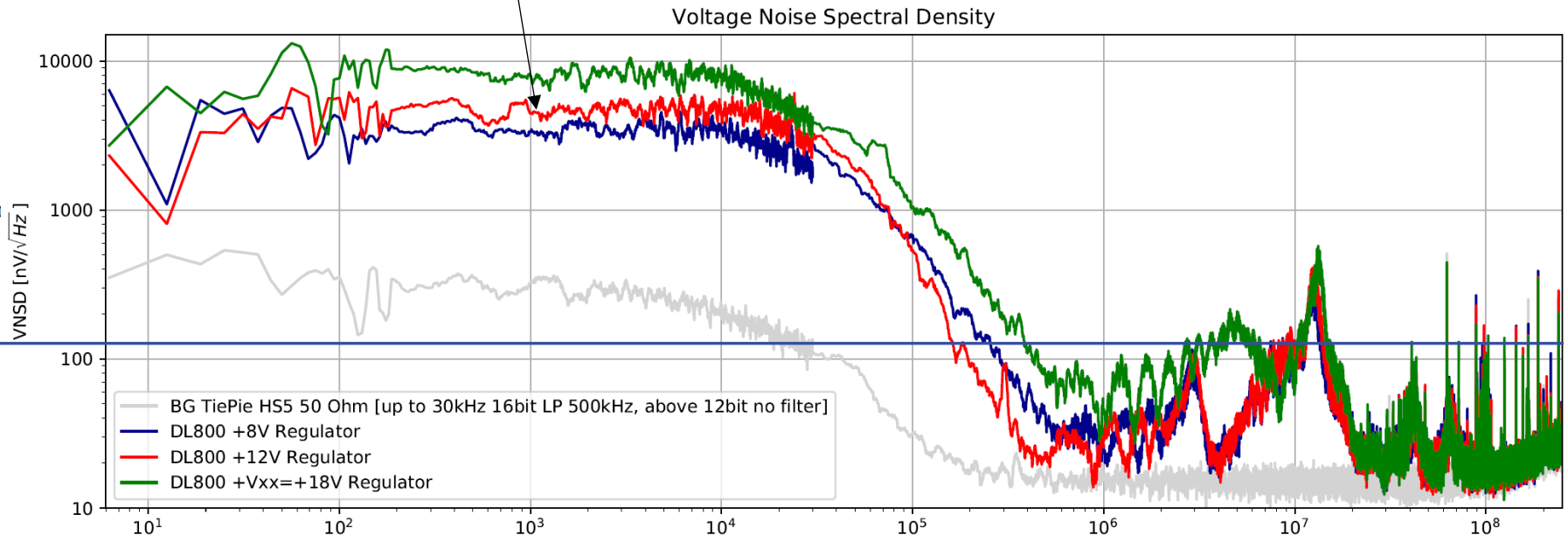

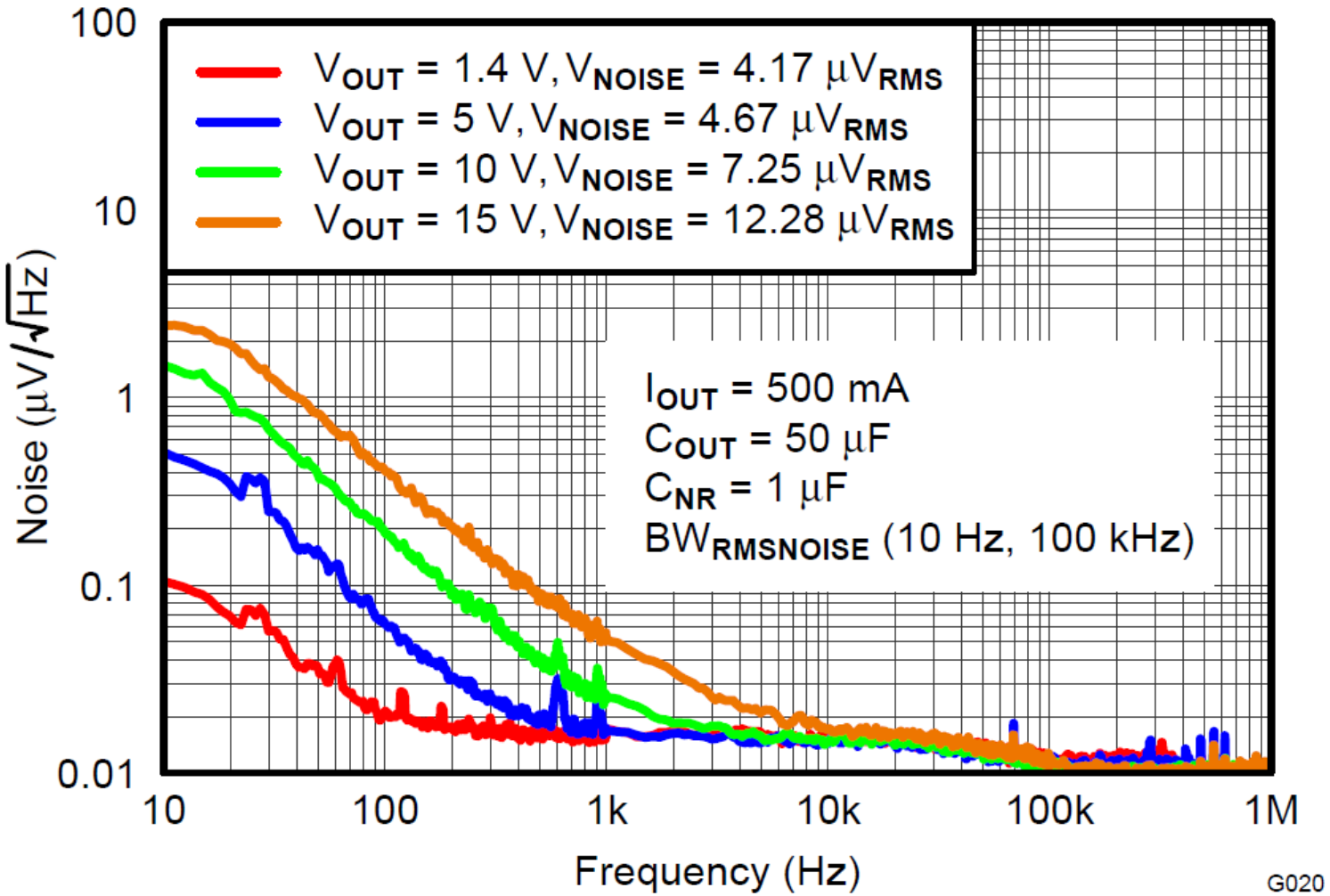
100
10
1
0.1
0.01
Noise (µV/√Hz)
10
100
1k
10k
100k
1M
Frequency (Hz)
VOUT = 1.4 V, VNOISE = 4.17 µVRMS
VOUT = 5 V, VNOISE = 4.67 µVRMS
VOUT = 10 V, VNOISE = 7.25 µVRMS
VOUT = 15 V, VNOISE = 12.28 µVRMS
IOUT = 500 mA
COUT = 50 µF
CNR = 1 µF
BWRMSNOISE (10 Hz, 100 kHz)
G020

+8V, +12V, +18V

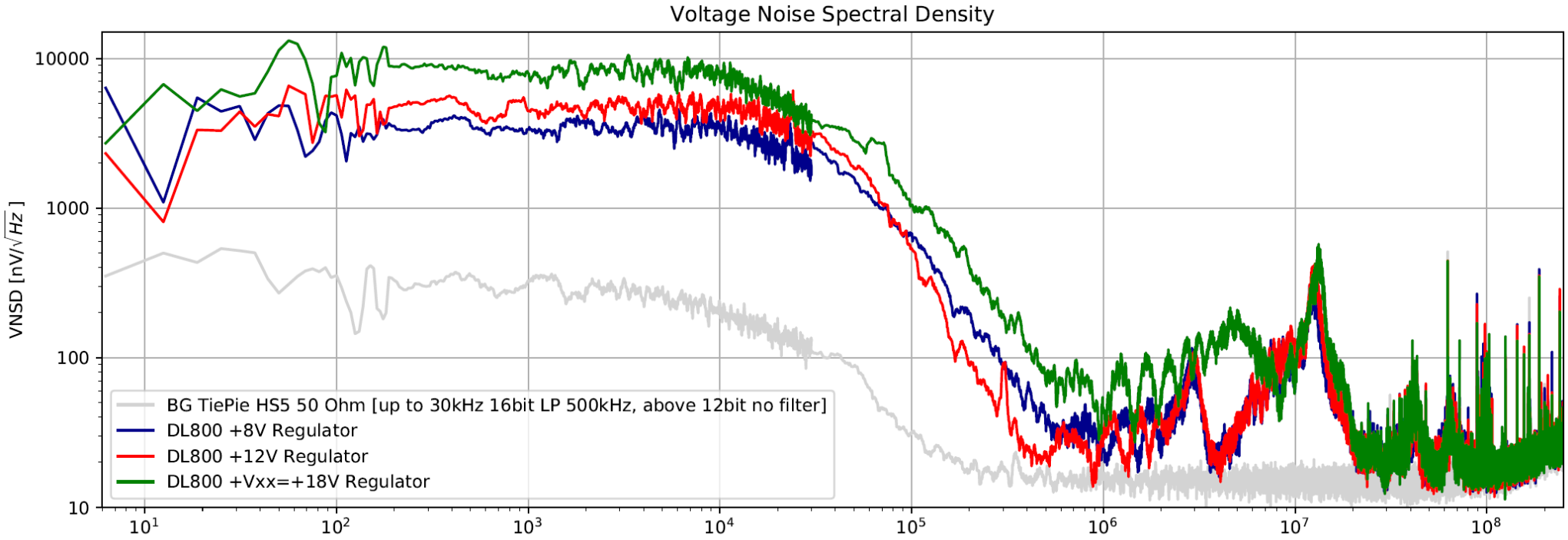

+Vref=10V, 3.3V

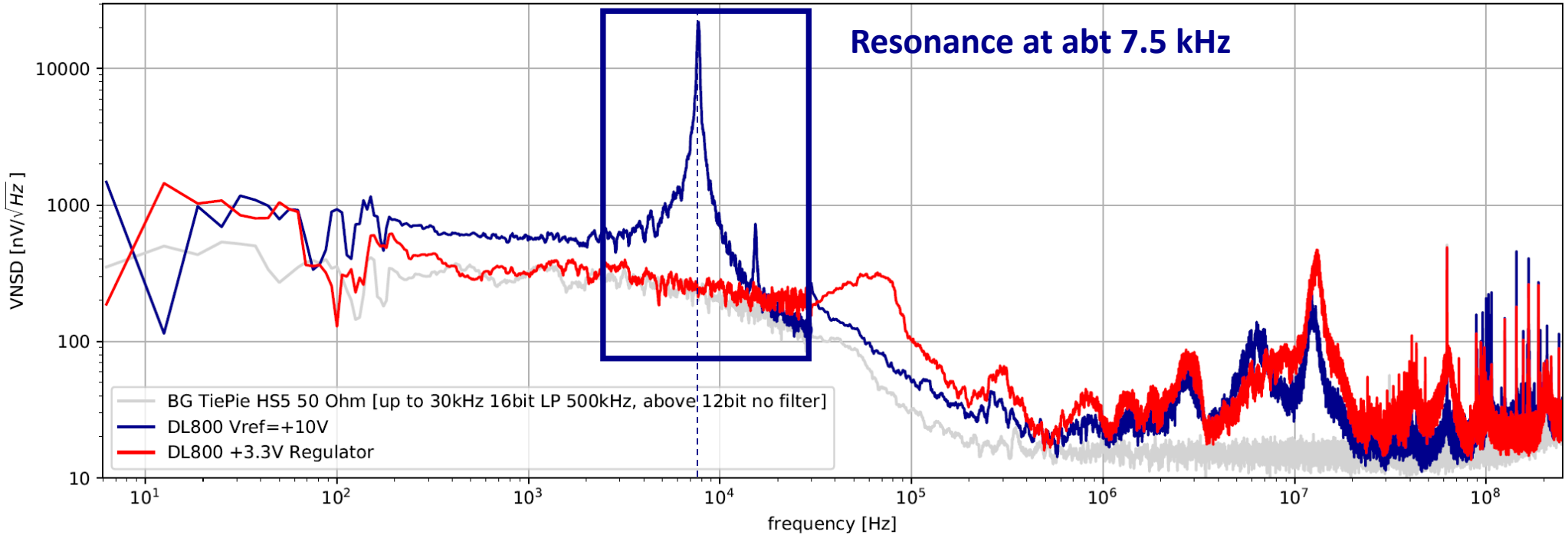

After OP192

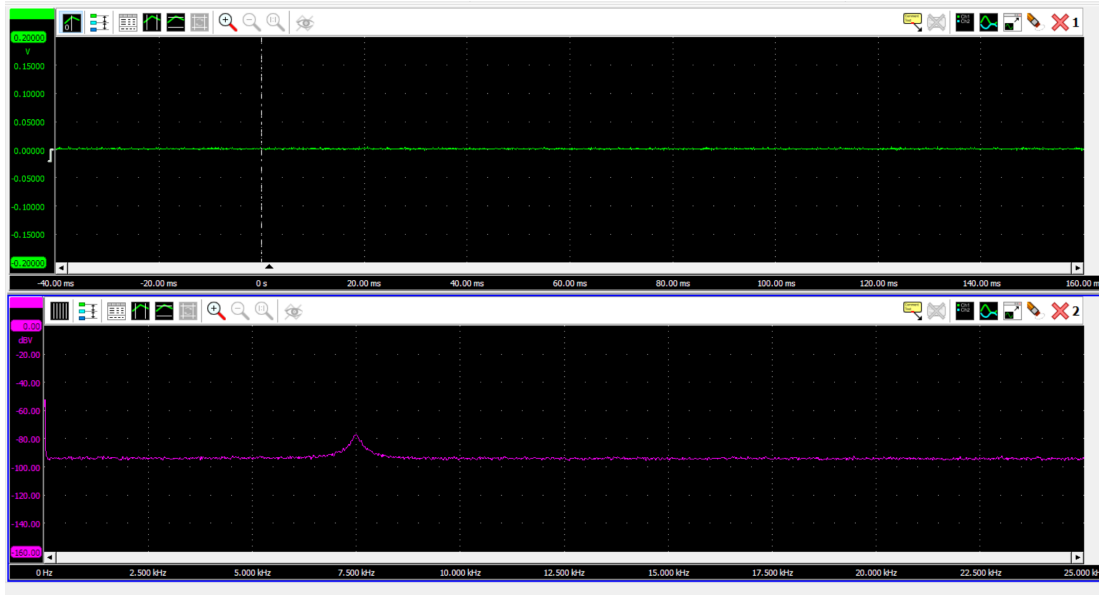

Output ADR01ARZ Ref Chip, Input OP

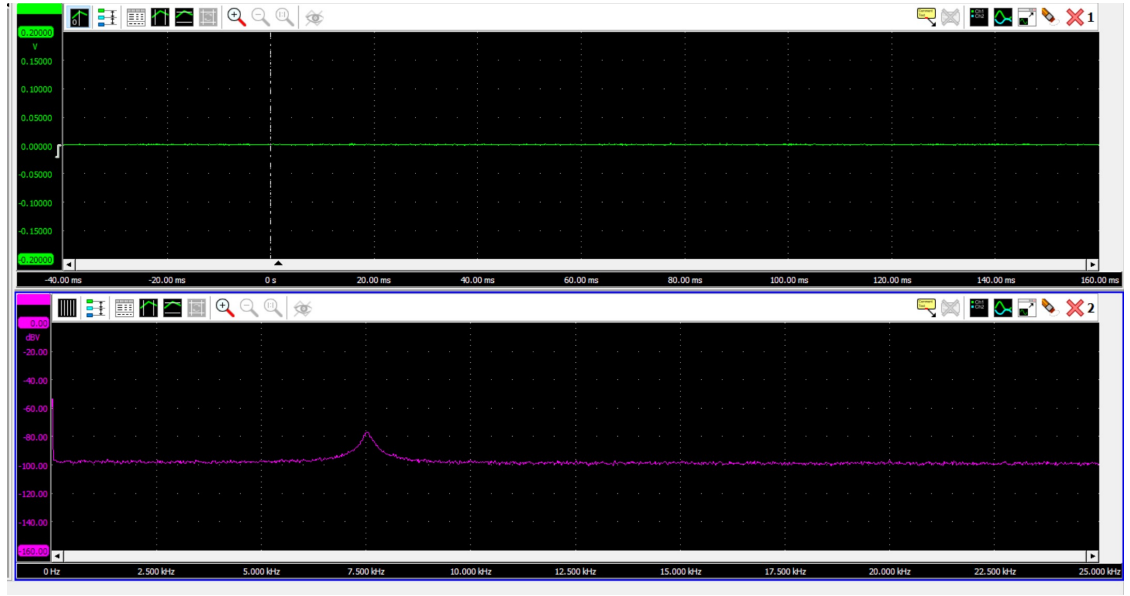

Without C44 (100n)

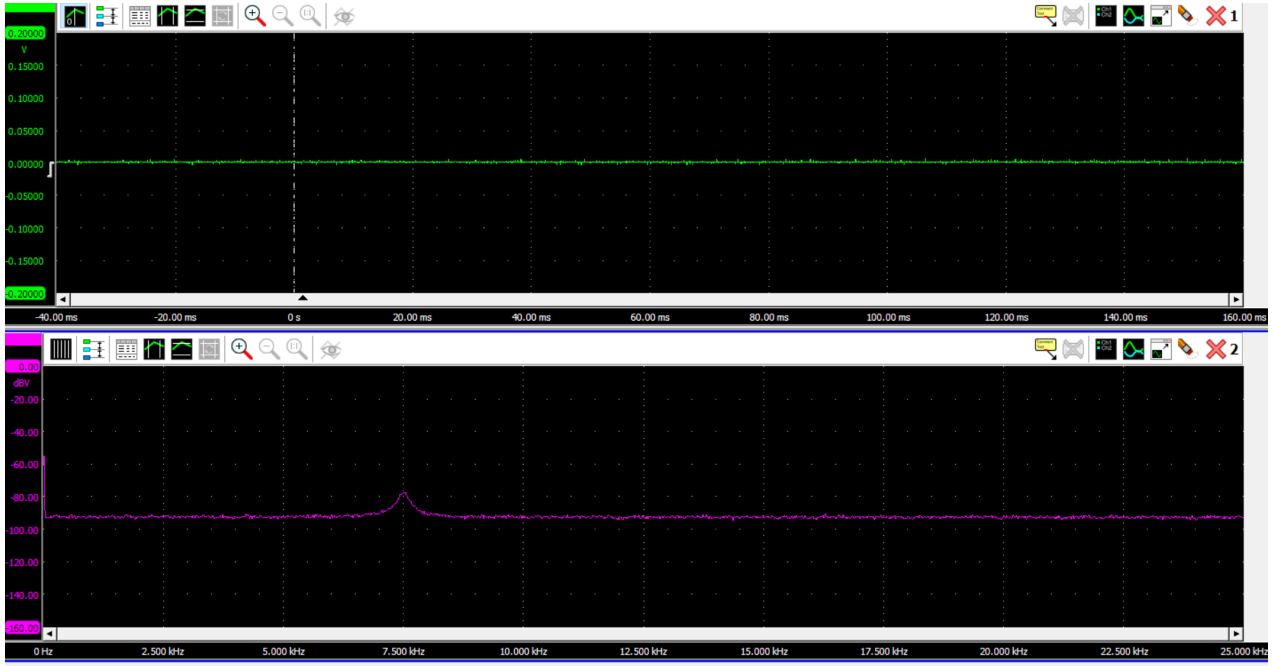

Without C45 (10µ) and without C44 (100n)

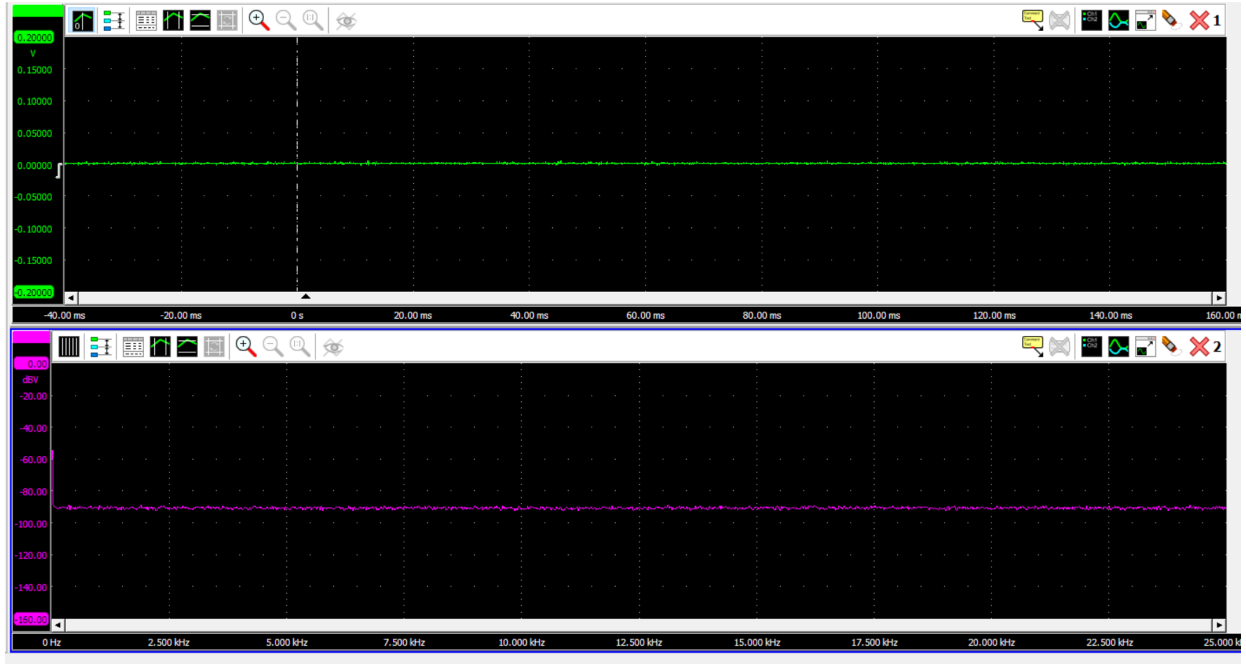

DL800 Reference
ADR01ARZ

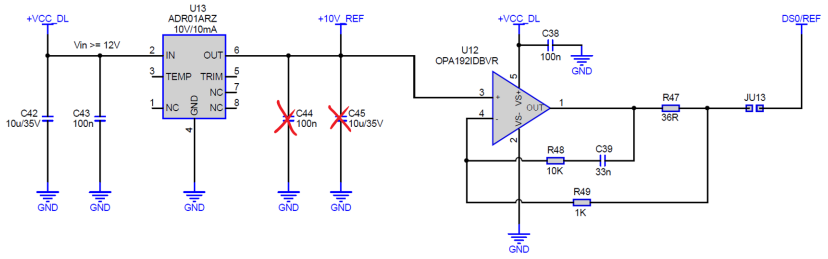

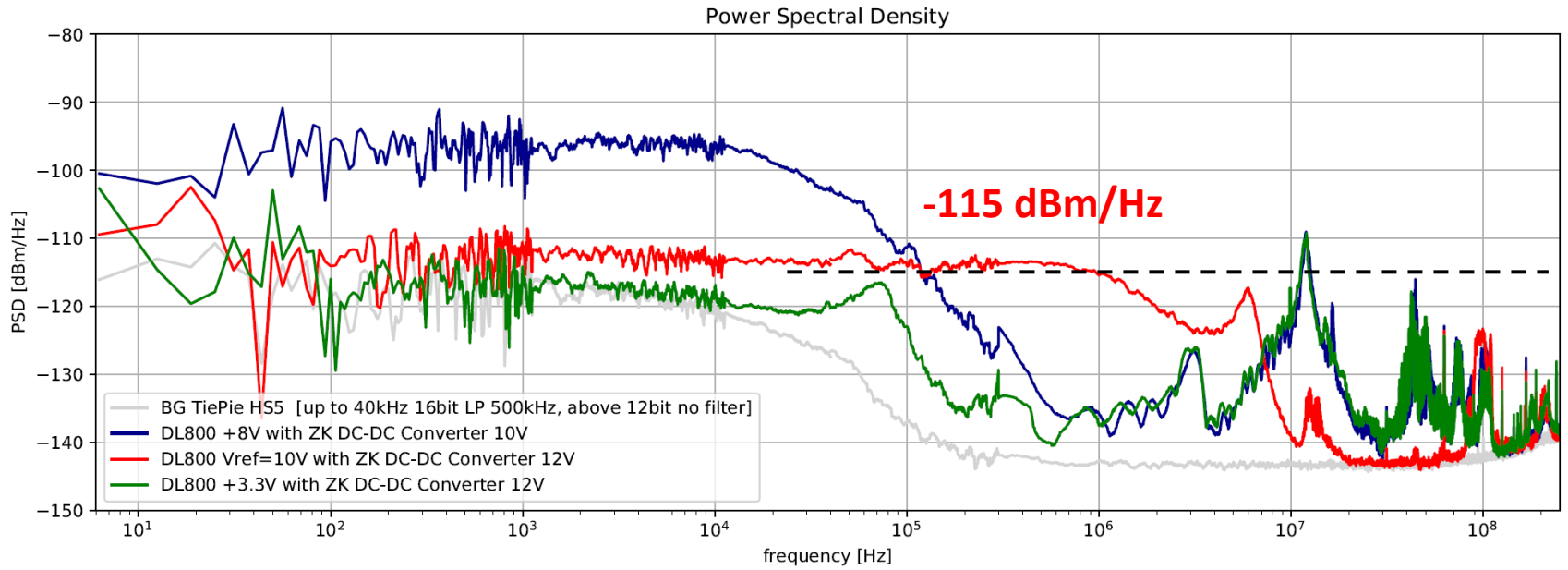

SU804
ADR445B

5V Reference

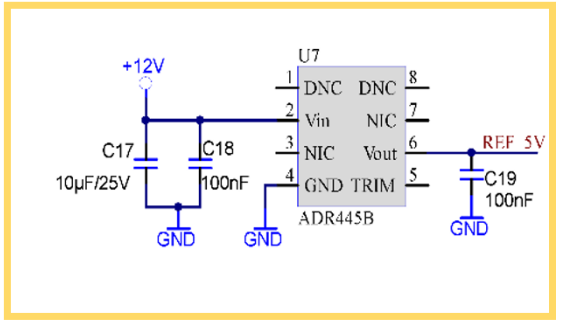

ternal Control voltage

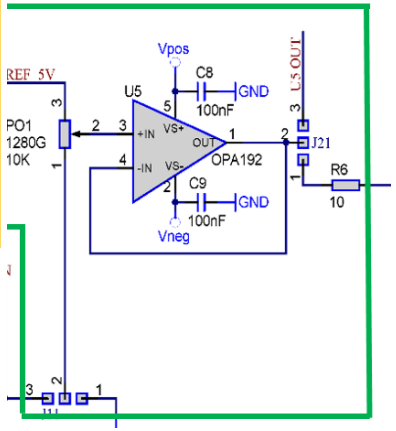

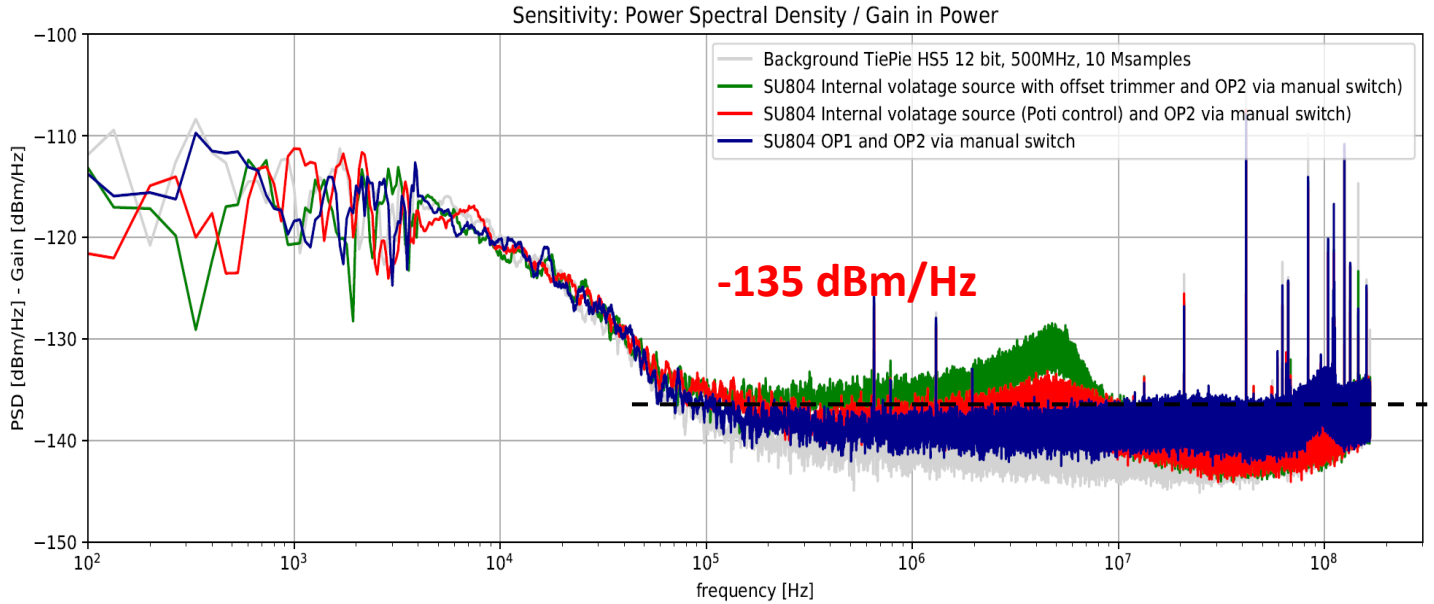

DL 800 / DL 801 heat sinks

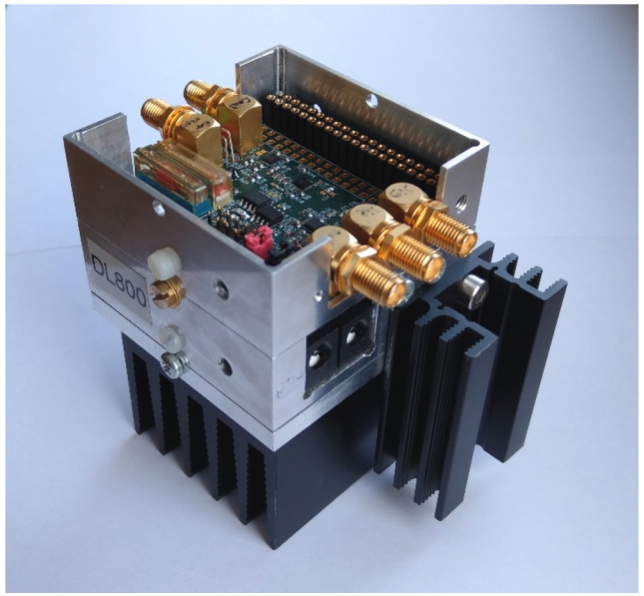

Bottom

Fischer Elektronik SK434/50SA Kühlkörper 3.1K/W, 50mm x 50mm x 40mm
RS Best.-Nr. 255-8523
https://de.rs-online.com/web/p/products/2558523/

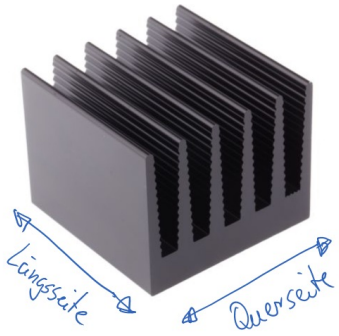

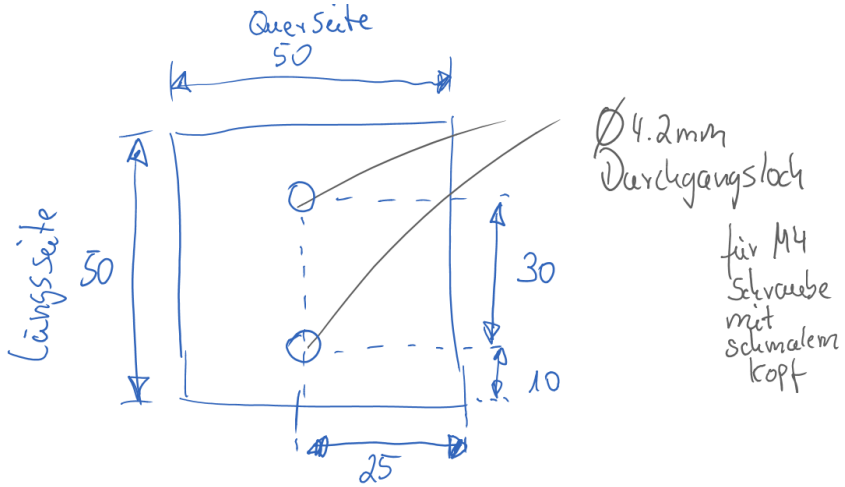

Side

Fischer Elektronik Kühlkörper 6K/W, 32mm x 20mm x 50mm
RS Best.-Nr. 221-2182
Herst. Teile-Nr. SK76-50-TO220

https://de.rs-online.com/web/p/kuhlkorper/2212182/

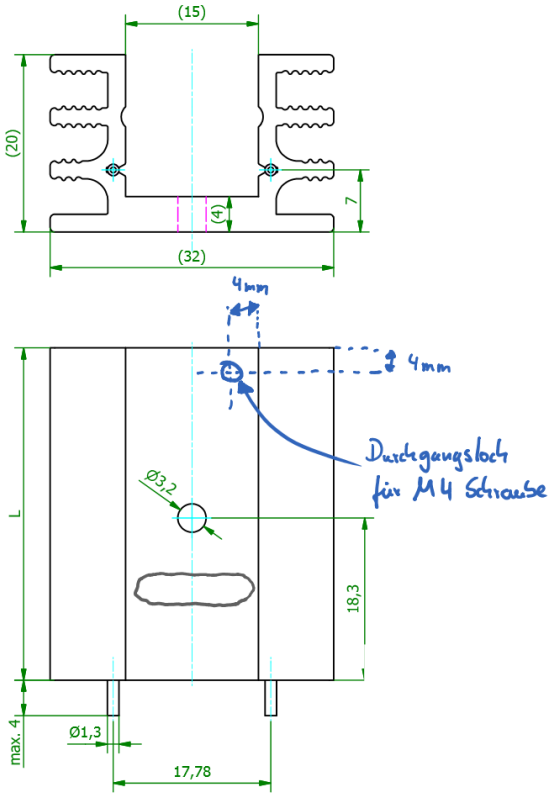

New Production series for DL800:

Set -Vp to -6V:

- - VP: R8= 10KΩ x (-Vp/1.174-1V -1) → http://www.google.com/search?q=10000*(6/1.185-1)**(→ 41.1k)**

Set +Vp to +6V:

- +VP: R41= 10KΩ x (+Vp/1.185V -1) → http://www.google.com/search?q=10000*(6/1.185-1) **(→ 40.6k)**

+8V, +12V, +18V

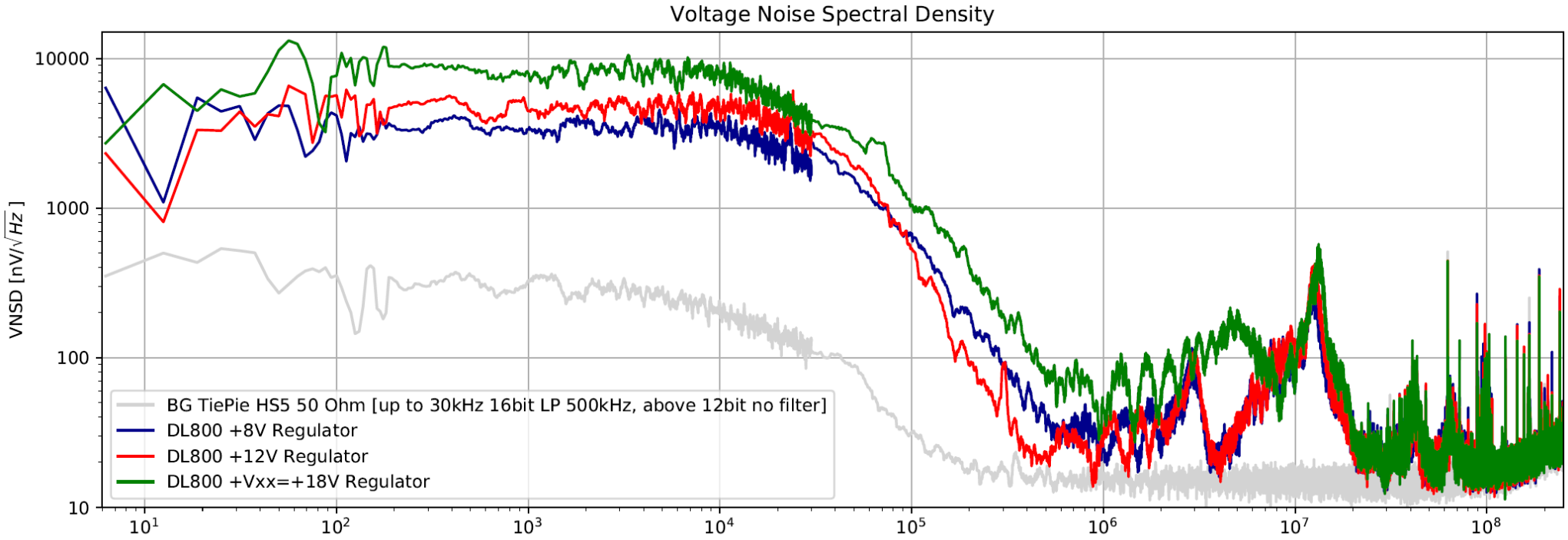

+Vref=10V, 3.3V

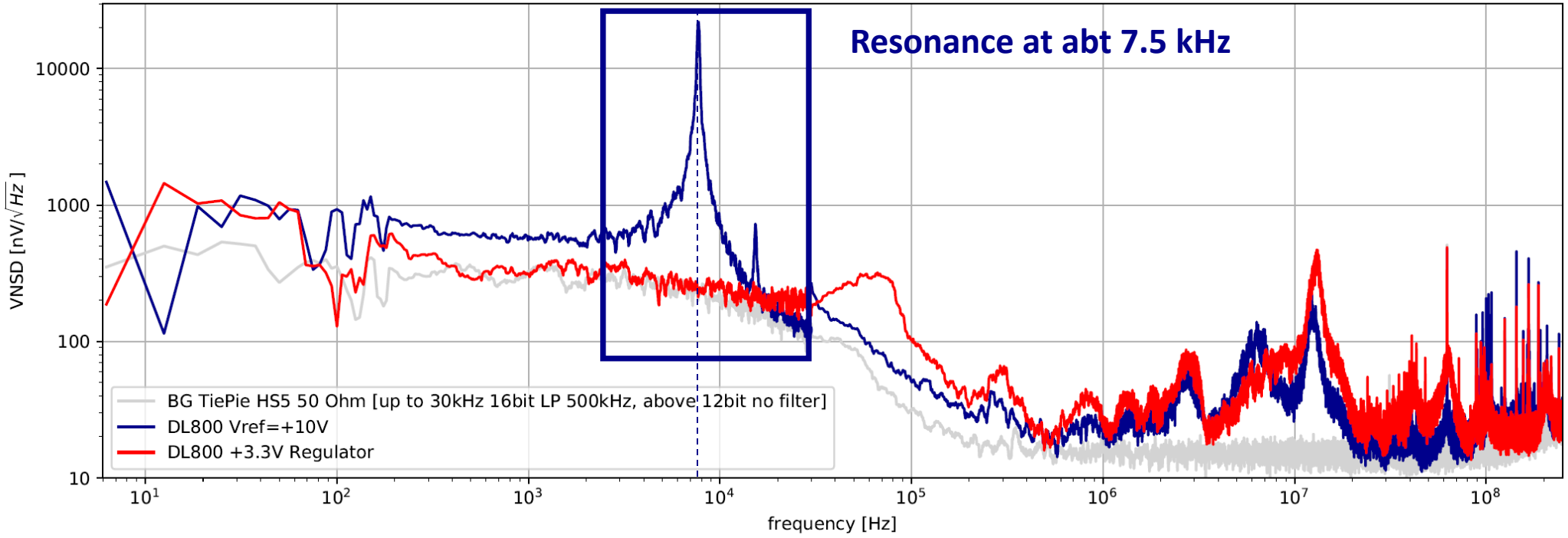

DL800 Debug:

- In case there is noise on Vset (see spectrum)

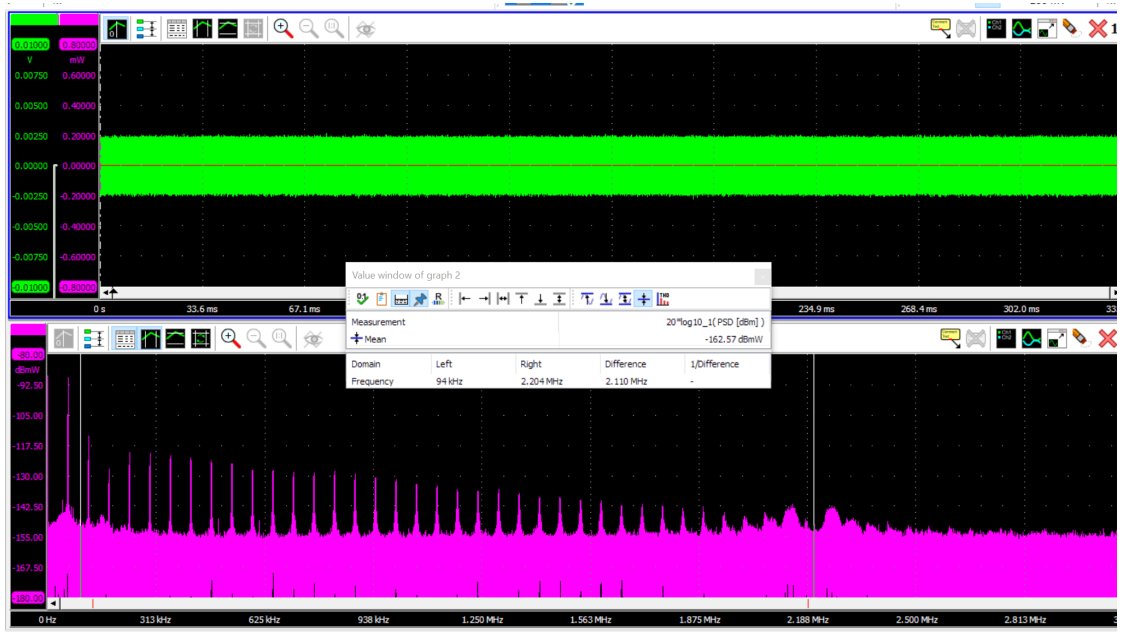

solution: Set values for +VP (+6V) , -Vp (-6V) ,+Vxx (+18V) and –Vxx (-2,7V)

DL800 / DL800 light Notes production

- Check for the latest production version and check for additional notes on the workshop server
- Add Polarity Protection: Pin 39: Top: Block pin with solder. Bottom: Cut pin
- Set factory jumper settings
- Put PCBs into Aluminium case. Drawings of the cases can be found here:
  \\pi2\microcontroller\QD-Ultracold\Q-El - e-lego\Cases and Heatsink Needed: **Case Power DL800, Boden Power DL800**
- Test all available voltages: Pin 1 to 27 (odd numbers)
- Label the finished boxes with the Part-number **DL800 / DL800 light.** Label the positive inputs with **„+Vin“**
- Add some notes to the workshop server if there has been some modifications to the previous production version
- If not available yet, make pictures of the produced component and put them on the workshop server
- If not available yet, leave one module in the e-workshop Muster box and label it with „Muster E-Werkstatt“

e-lego sub-module

DC-DC Converter Q-PS004

Buck Boost Converter with current limit

Input: DC 5,5-30 V
Output: DC 0,5-30 V (Poti controlled)
Step UP Down Voltage Regulator
Max current: 3A
Max Power: 35W
Addition: Load Resistor for setting up current limit (Poti controlled)

Arcelli ZK-SJVA-4X
Dimensions: 66.4 mm x 48.2 mm

https://www.amazon.de/gp/product/B07MY399GQ/ref=ppx_yo_dt_b_search_asin_title?ie=UTF8&psc=1

PS 1 (e.g. possitive supply)

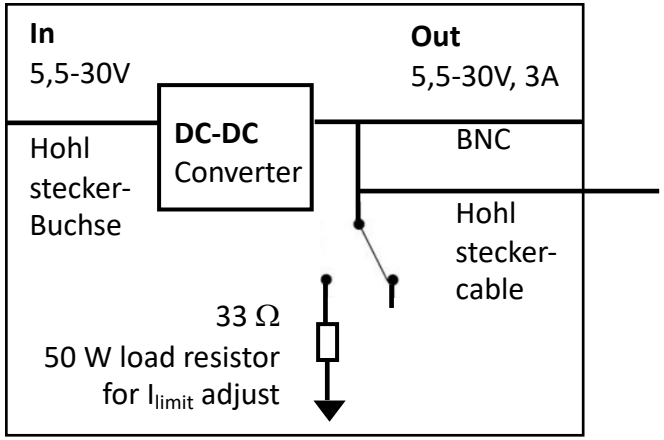

PS 2 (e.g. negative supply)

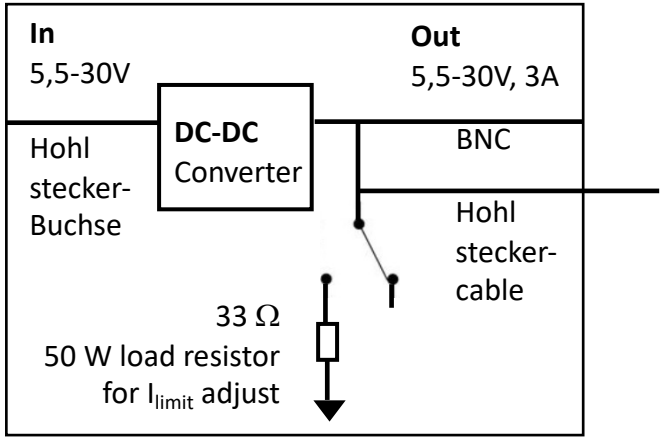

DC-DC Converter Q-PS004

Noise spectral density

Dehner Wallplug Power Supply
+ ARCELI ZK DC-DC Converter

in comparison to
Dehner Wallplug Power Supply only

DL800 Vset=+6V , Vcc

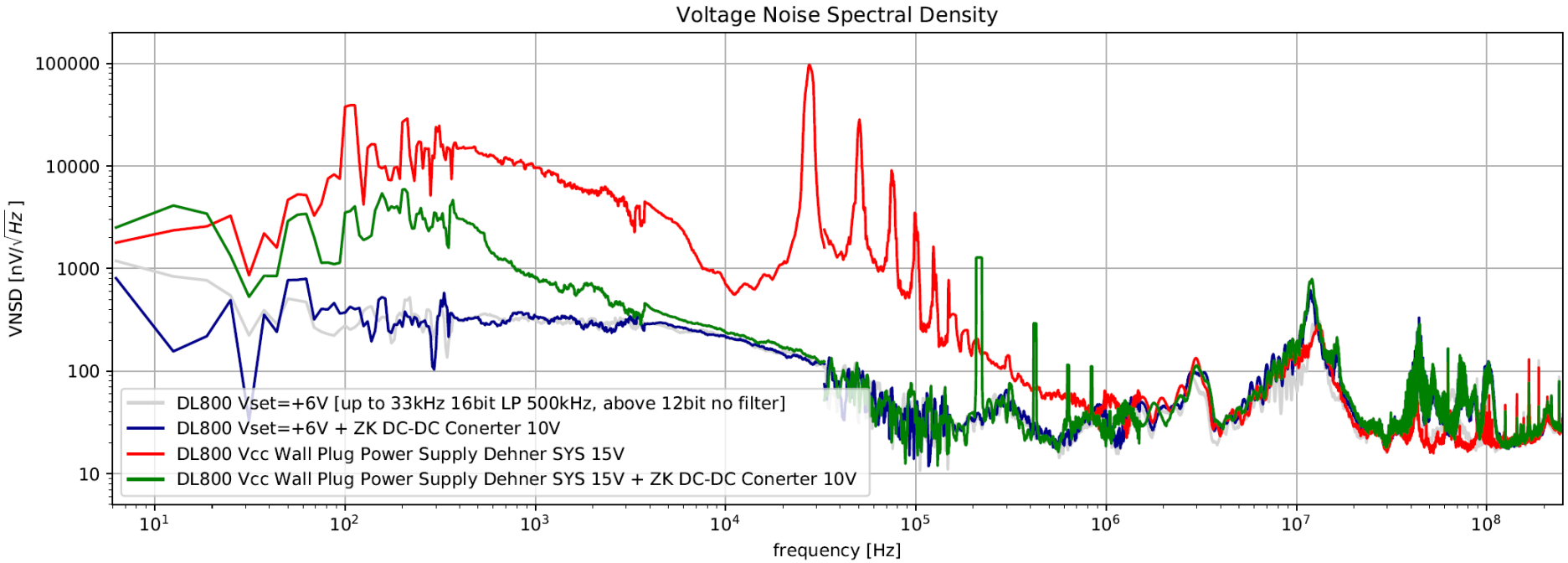

DL800 Vset=+6V

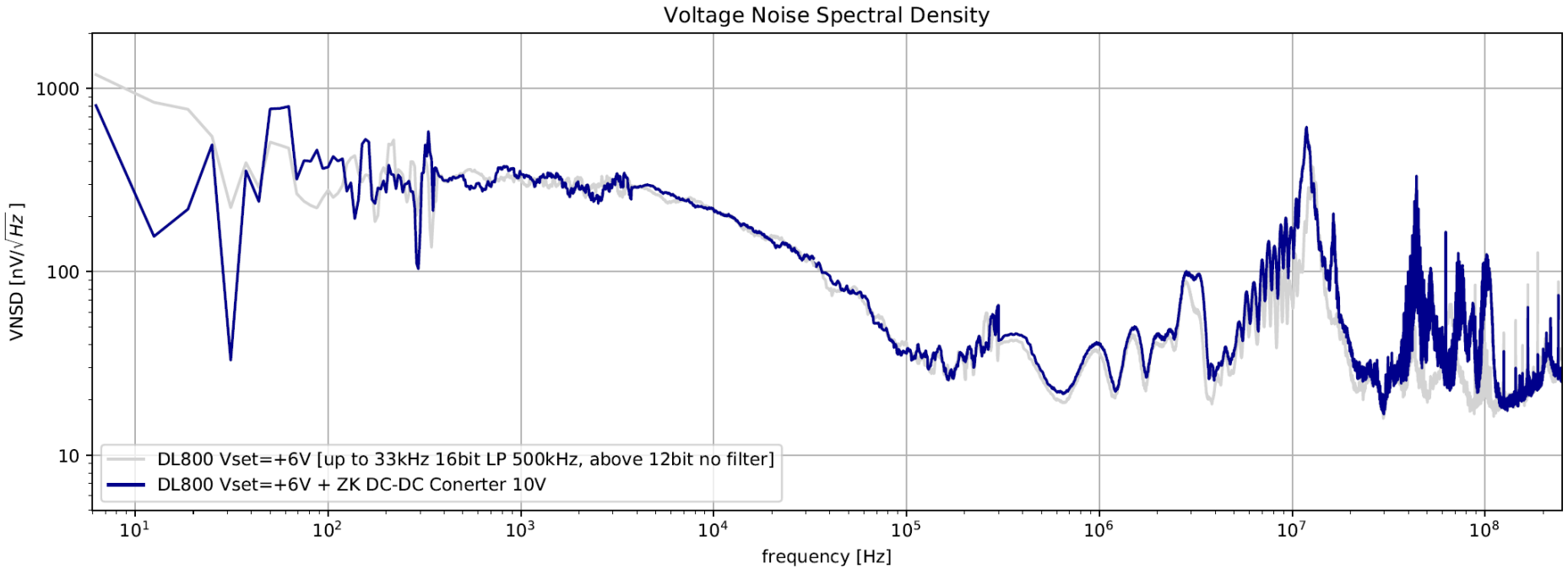

DC-DC Converter Q-PS004, list of components, labels, images

List of components, Voelkner electronics

- BNC Einbaubuchse Telegaertner-J01001A0043 **(V076821)**
- Hammond-Electronics-1591DBK-Euro-Gehaeuse-150-x-80-x-50-ABS-Schwarz **(S57367)**
- Hohlsteckerbuchse BKL-Electronic-072881-Niedervolt-Steckverbinder-Buchse-Einbau-vertikal-5.7mm-2.1mm **(W874671)**
- Hohlsteckerkabel BKL Electronic Niedervolt-Verlängerungskabel Niedervolt-Stecker - Niedervolt-Buchse 5.5mm 2.1mm 2.1mm 3.00m 1St. **(V654561)**
- Kippschalter APEM-5239A-52390003-Kippschalter-250-V-AC-3A-1-x-Ein-Aus-Ein-rastend-0-rastend **(D77940)**
- Power Widerstand - Widap 160082 Draht-Widerstand 22? im Gehäuse 50W 1% **(S539961)**

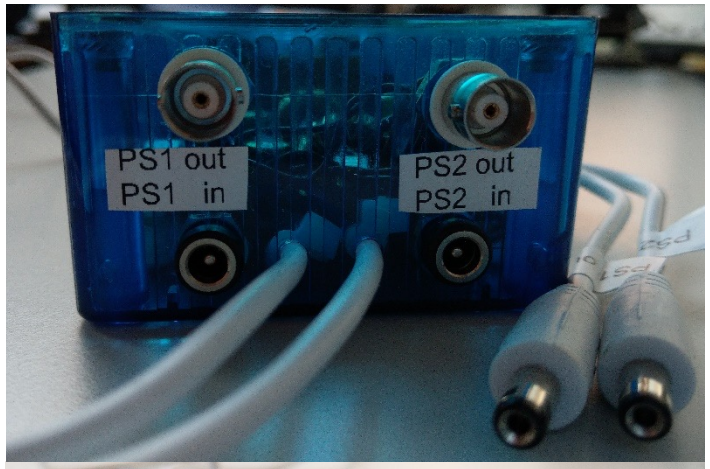

Comparison of different DC-DC converters

- Cosel
- CUI
- Murata

https://heibox.uni-heidelberg.de/f/04995d5a8a694bb783d0/?dl=1

Power Supply Module: DL 801

e-lego module

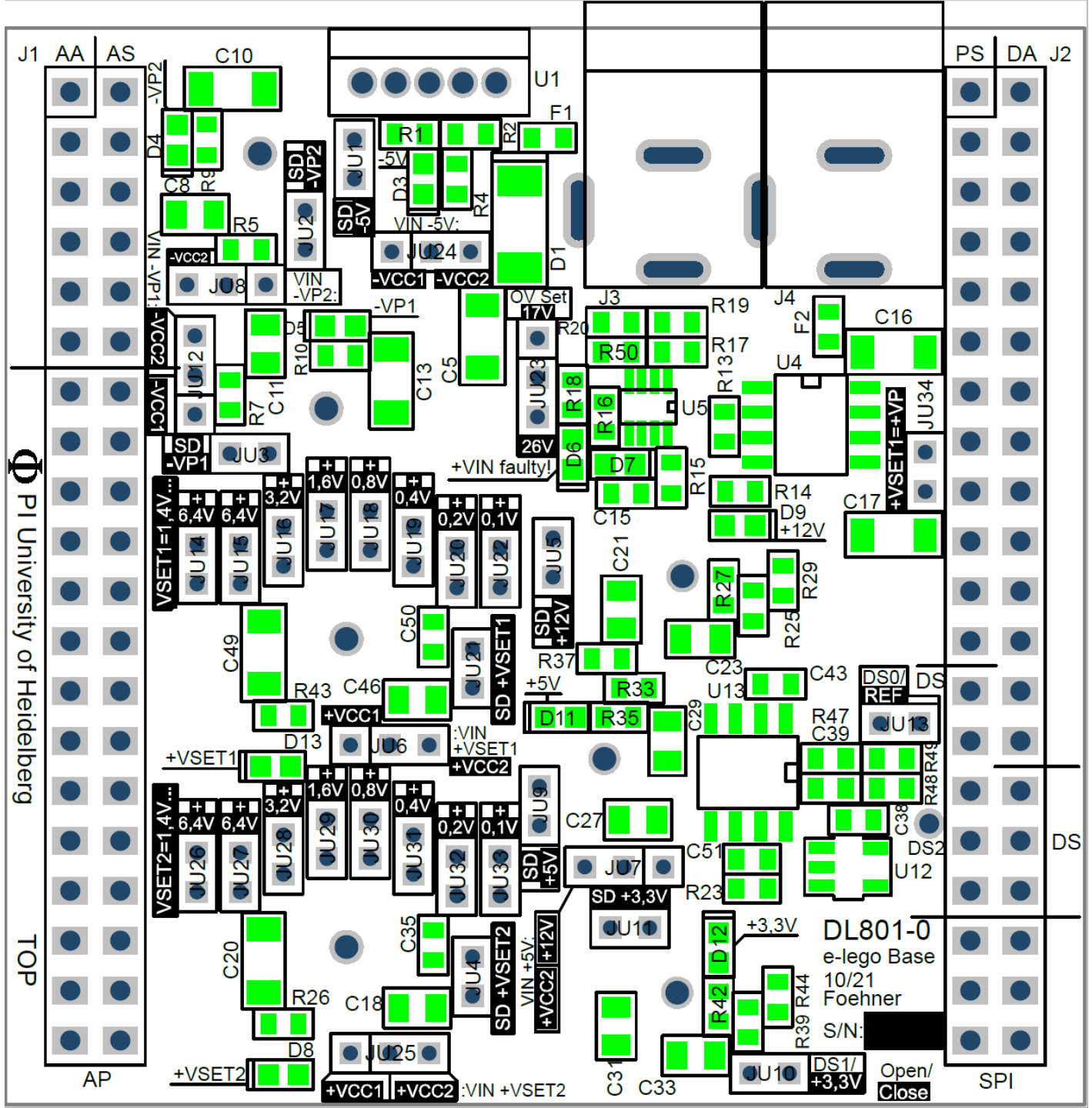

J1
AA
AS
PS
DA
J2
AP
SPI
TOP
PI University of Heidelberg
DL801-0
e-lego Base
10/21
Foehner
S/N:
Open/
Close
DS
DS0/
REF
DS1/
+3,3V
+VIN faulty!
+VSET1=+VP
VSET1=1,4V...
VSET2=1,4V...
SD +VSET1
SD +VSET2
SD +12V
SD +5V
SD +3,3V
VIN -5V:
VIN -VP1:
VIN -VP2:
OV Set
17V
26V
+5V
+3,3V
+12V
+VCC1
+VCC2
:VIN +VSET1
:VIN +VSET2

Bug-Fixes for new production → DL801

- **Problem: Need to plug in positive power supply first**: ok, ich habe ein kleines Problem gefunden (in DL800). Im Datenblatt vom Spannungsregler U9 für +5V ist es streng empfohlen:

  "When used in dual supply systems where the regulator load is returned to a negative supply, the output voltage must be diode clamped to ground."

  Je nachdem welche Spannung zuerst da ist, wenn der +5V Regler negative Spannung an seinem Ausgang sieht, zündet er nicht an und bleibt aus.
  Wir haben eine Shottky-Diode parallel zum Ausgang von +5V Regler gelötet und das Problem ist weg.

- **Set positive shutdown Voltage to +16V (currently ~15.4 V)**

- **Implement negative shutdown option (remove16 V zener diode)**

- **Remove 7.5 kHz resonance on reference Voltage**

- **Replace –Vp chip: Remove –Vp chip and add a new –Vset chip (1A). Connect –Vset chip to old –Vp pin. Relabel old –Vp pin by -Vset. Standard jumper setting: +Vset= -6V and +Vset = +6V.**

- **Remove +Vp chip and connect the +Vp via a jumper to the +Vset oin.**

- **Remove +8V regulator and DS6 pin. Replace their pins on e-lego connector with new standard pins +Vcc2 and –Vcc2 (see notes)**

- **Make Vcc for regulators selectable by jumpers (see notes)**

New pin asignment

Donnerstag, 18. März 2021 09:06

Number in brackets: default values.

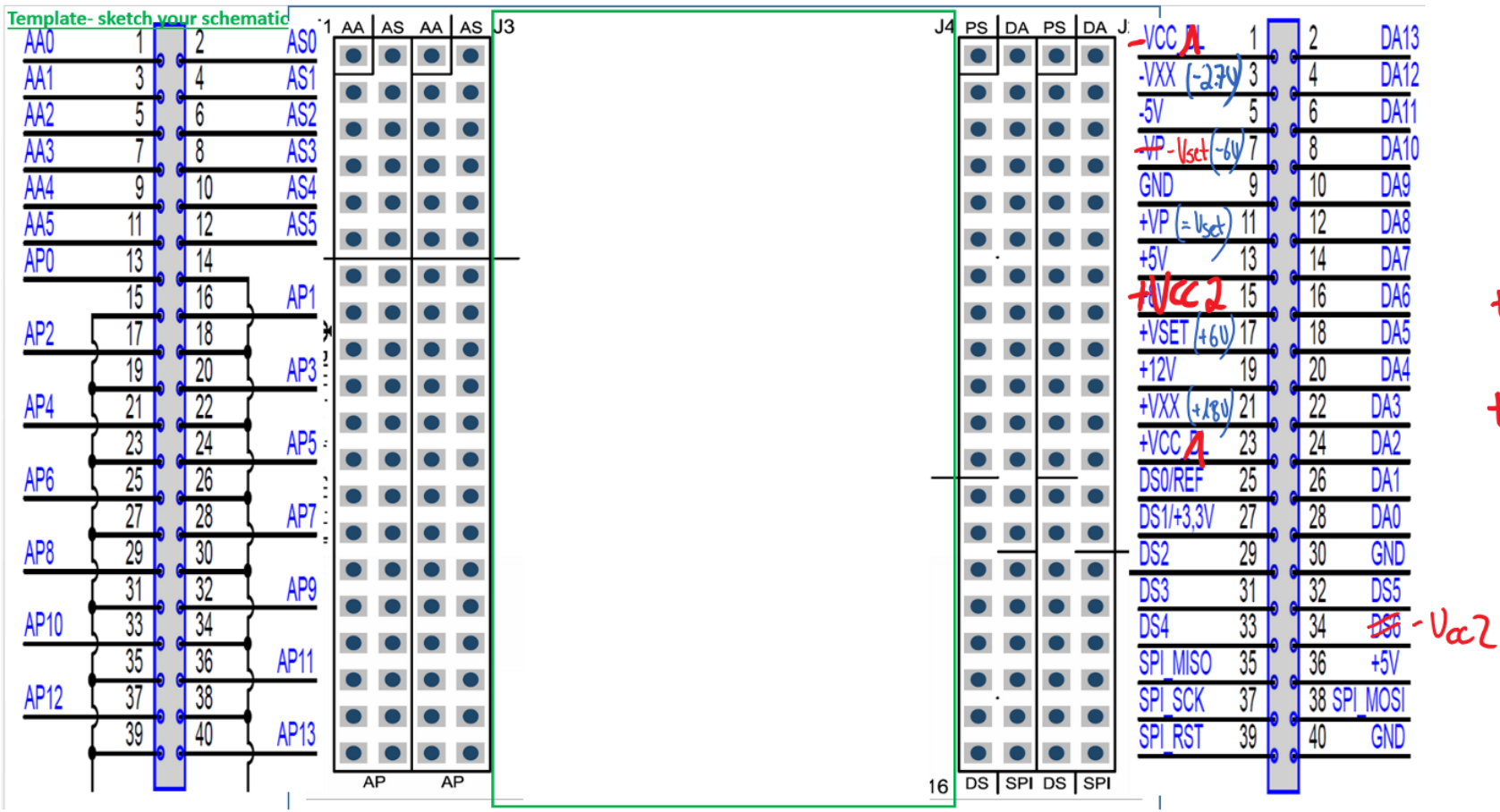

$-V_{cc}1$: $-7V$ $(-13V/-24V)$

$+V_{ccc}2$: $+7V$

$+V_{cc}1$: $+13V$ $(+24V)$

$-V_{cc}2$: $-13V$ $(-24V)$

Positive

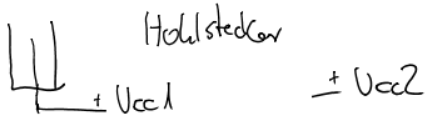

Wenn möglich überall jumper bei den Reglern.

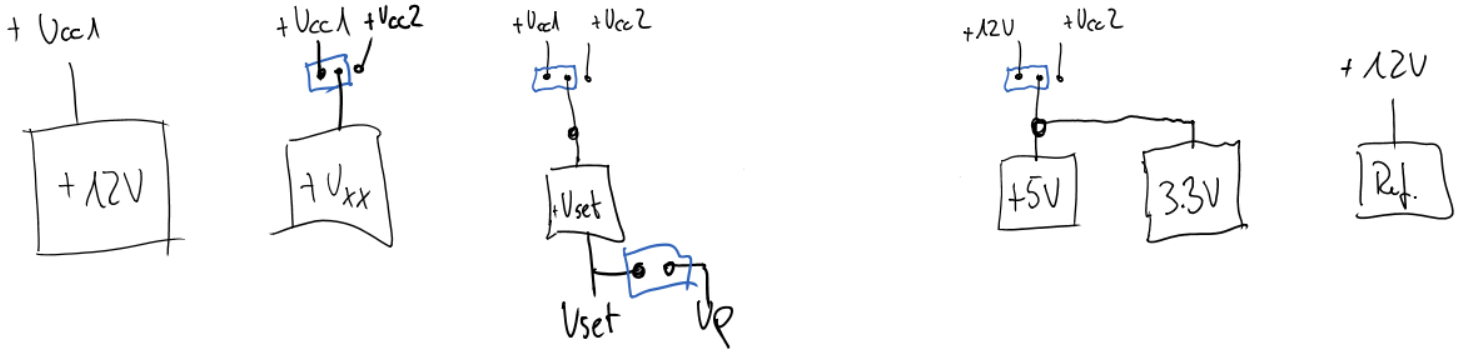

Negative

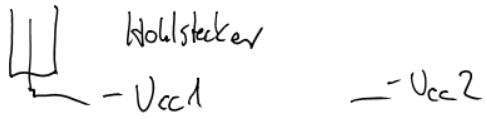

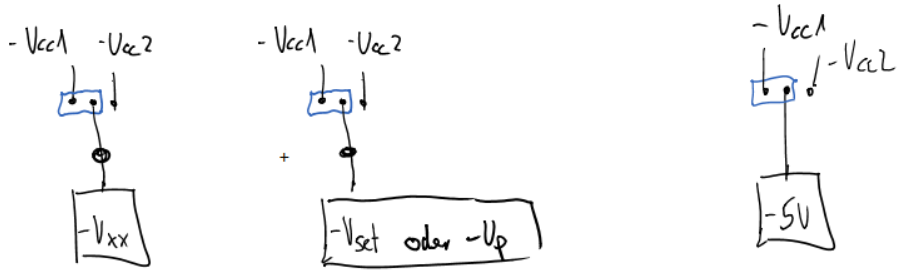

DL801 Notes production

- Check for the latest production version and check for additional notes on the workshop server
- Add Polarity Protection: Pin 39: Top: Block pin with solder. Bottom: Cut pin
- Set factory jumper settings
- Put PCBs into Aluminium case. Drawings of the cases can be found here:
  \\pi2\microcontroller\QD-Ultracold\Q-El - e-lego\Cases and Heatsink Needed: **Case DL801,**
  Boden DL801
- Test all available voltages: Pin 1 to 27 (odd numbers)
- Label the finished boxes with the Part-number **DL801**. Label the positive input with **„+Vin“**
- Add some notes to the workshop server if there has been some modifications to the previous production version
- If not available yet, make pictures of the produced component and put them on the workshop server
- If not available yet, leave one module in the e-workshop Muster box and label it with „Muster E-Werkstatt“

BNC Connector Board

SU 802 – DL801 Break out board Part 1

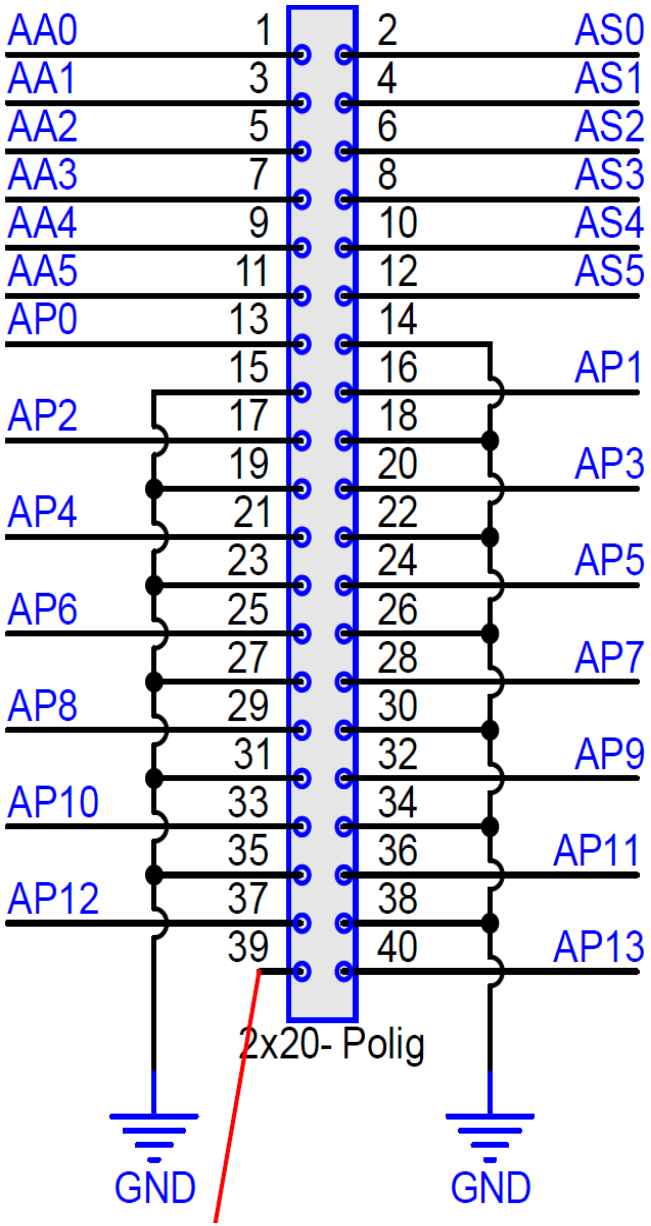

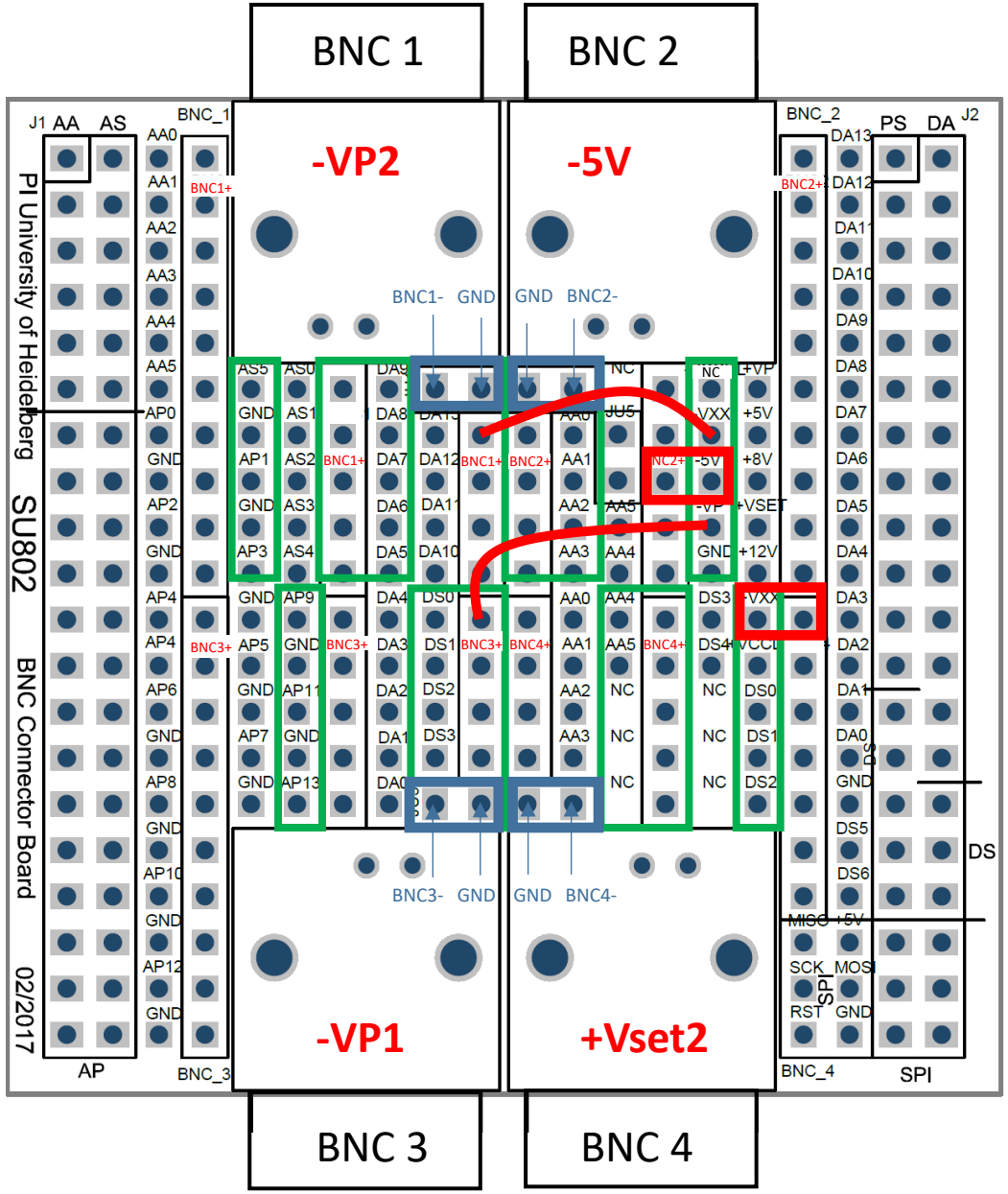

DL801 (DL800)

-VCC1 (-VCC_DL)	1	2	DA13	
-VP2 (-VXX)	3	4	DA12	
-5V	5	6	DA11	
-VP1 (-Vp)	7	8	DA10	
GND	9	10	DA9	
+VP	11	12	DA8	
+5V	13	14	DA7	
+VCC2 (+8V)	15	16	DA6	
+VSET1 (Vset)	17	18	DA5	
+12V	19	20	DA4	
+VSET2 (+VXX)	21	22	DA3	
+VCC1	23	24	DA2	
DS0/REF	25	26	DA1	
DS1/+3,3V	27	28	DA0	
DS2	29	30	GND	
DS3	31	32	DS5	
DS4	33	34 (DS6)	-VCC2	
SPI_MISO	35	36	+5V	
SPI_SCK	37	38	SPI_MOSI	
SPI_RST	39	40	GND	

Default Values:

-VCC1:	-7V (-13V/-24V)
-VP2:	-2,7V
-VP1:	-6V
-VCC2:	-13V (-24V)
+VP: =	+VSET1
+VCC2:	+7V
+VSET1:	+6V
+VSET2:	+18V
+VCC1:	+13V (+24V)

BNC Connector Board

SU 802 – DL801 Break out board Part 2

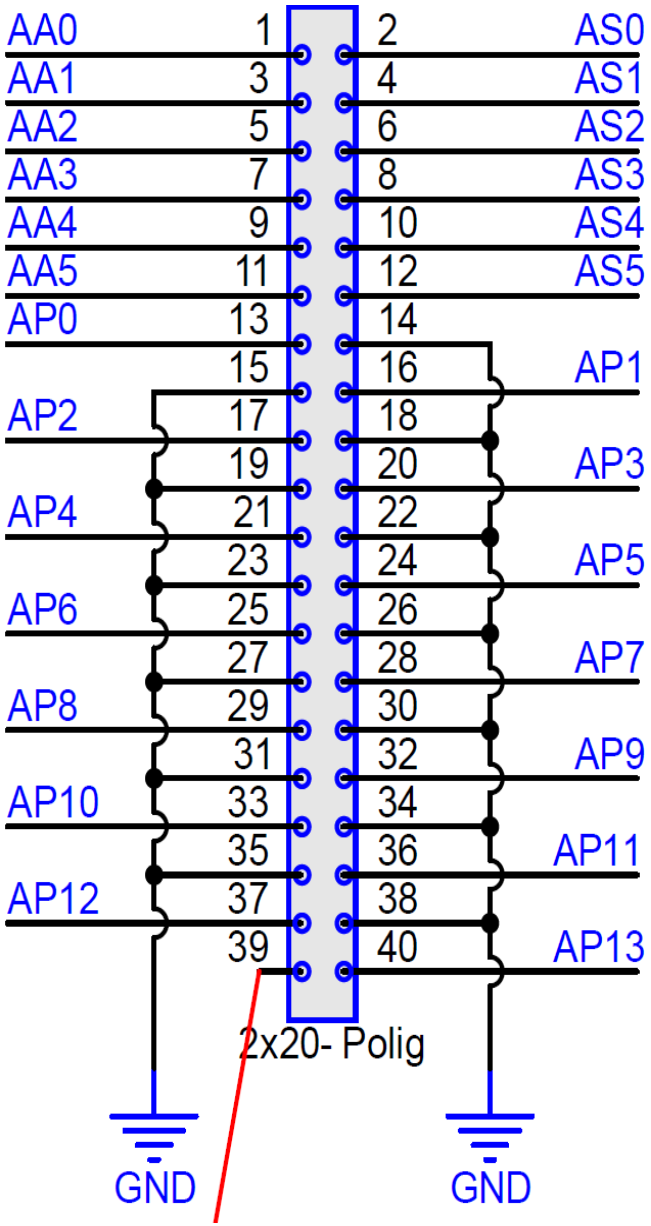

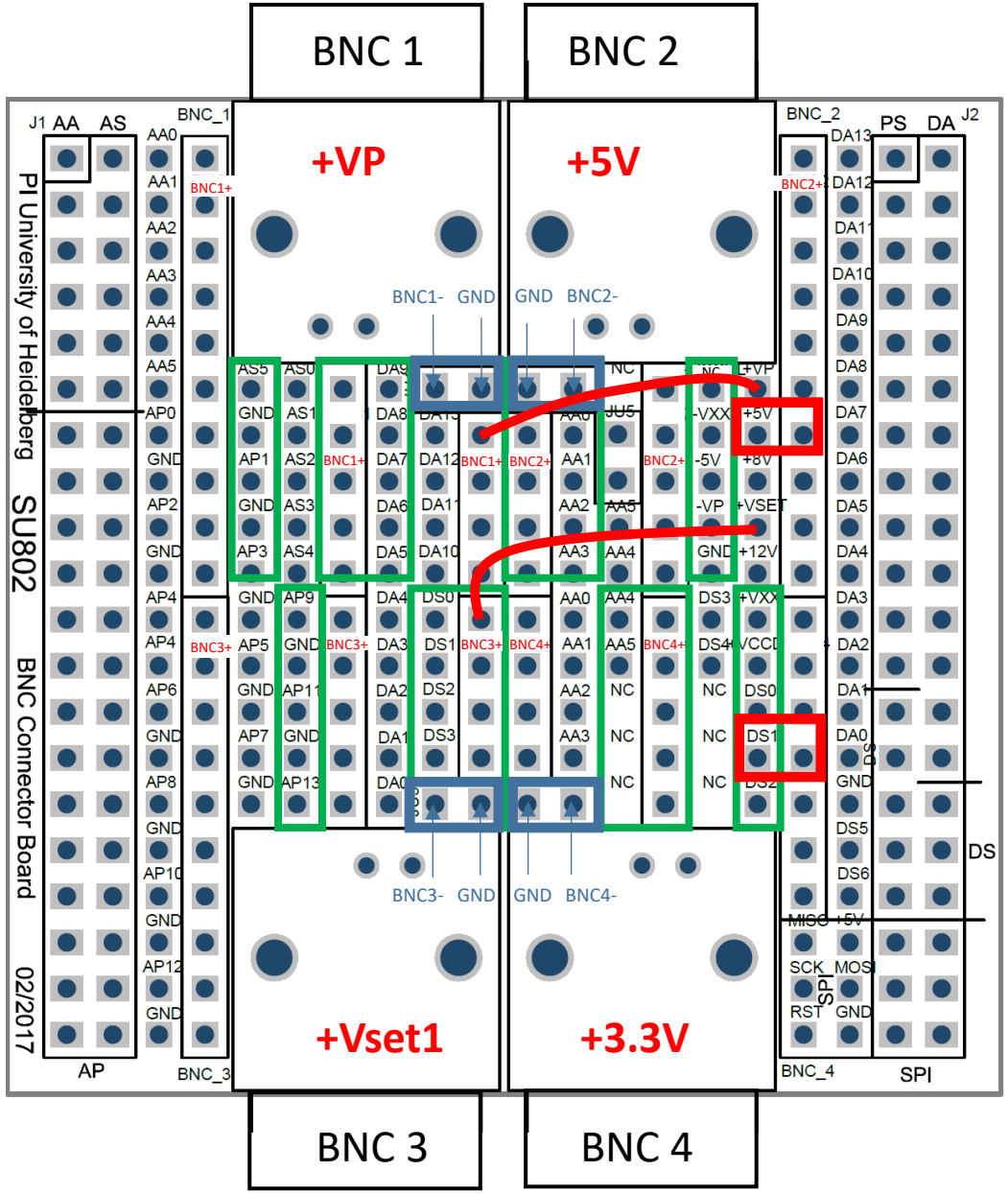

DL801 (DL800)

-VCC1 (-VCC_DL)	1	2	DA13	
-VP2 (-VXX)	3	4	DA12	
-5V	5	6	DA11	
-VP1 (-Vp)	7	8	DA10	
GND	9	10	DA9	
+VP	11	12	DA8	
+5V	13	14	DA7	
+VCC2 (+8V)	15	16	DA6	
+VSET1 (Vset)	17	18	DA5	
+12V	19	20	DA4	
+VSET2 (+VXX)	21	22	DA3	
+VCC1	23	24	DA2	
DS0/REF	25	26	DA1	
DS1/+3,3V	27	28	DA0	
DS2	29	30	GND	
DS3	31	32	DS5	
DS4	33	34 (DS6)	-VCC2	
SPI_MISO	35	36	+5V	
SPI_SCK	37	38	SPI_MOSI	
SPI_RST	39	40	GND	

Default Values:

-VCC1:	-7V (-13V/-24V)
-VP2:	-2,7V
-VP1:	-6V
-VCC2:	-13V (-24V)
+VP: =	+VSET1
+VCC2:	+7V
+VSET1:	+6V
+VSET2:	+18V
+VCC1:	+13V (+24V)

BNC Connector Board

SU 802 – DL801 Break out board Part 3

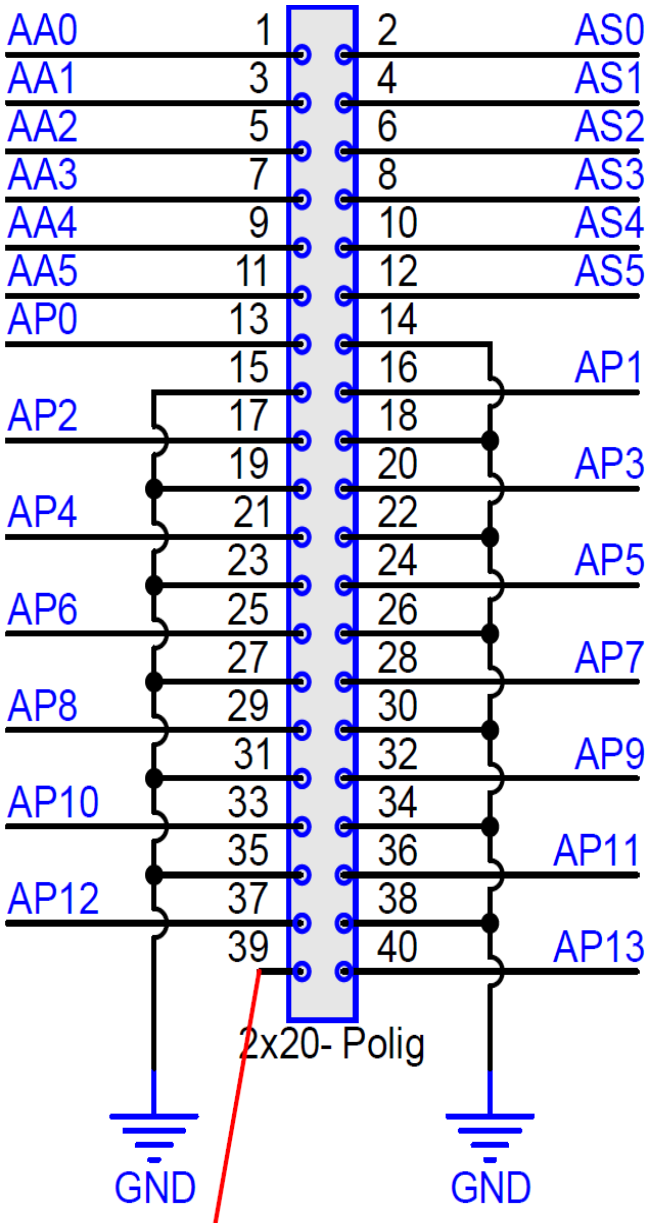

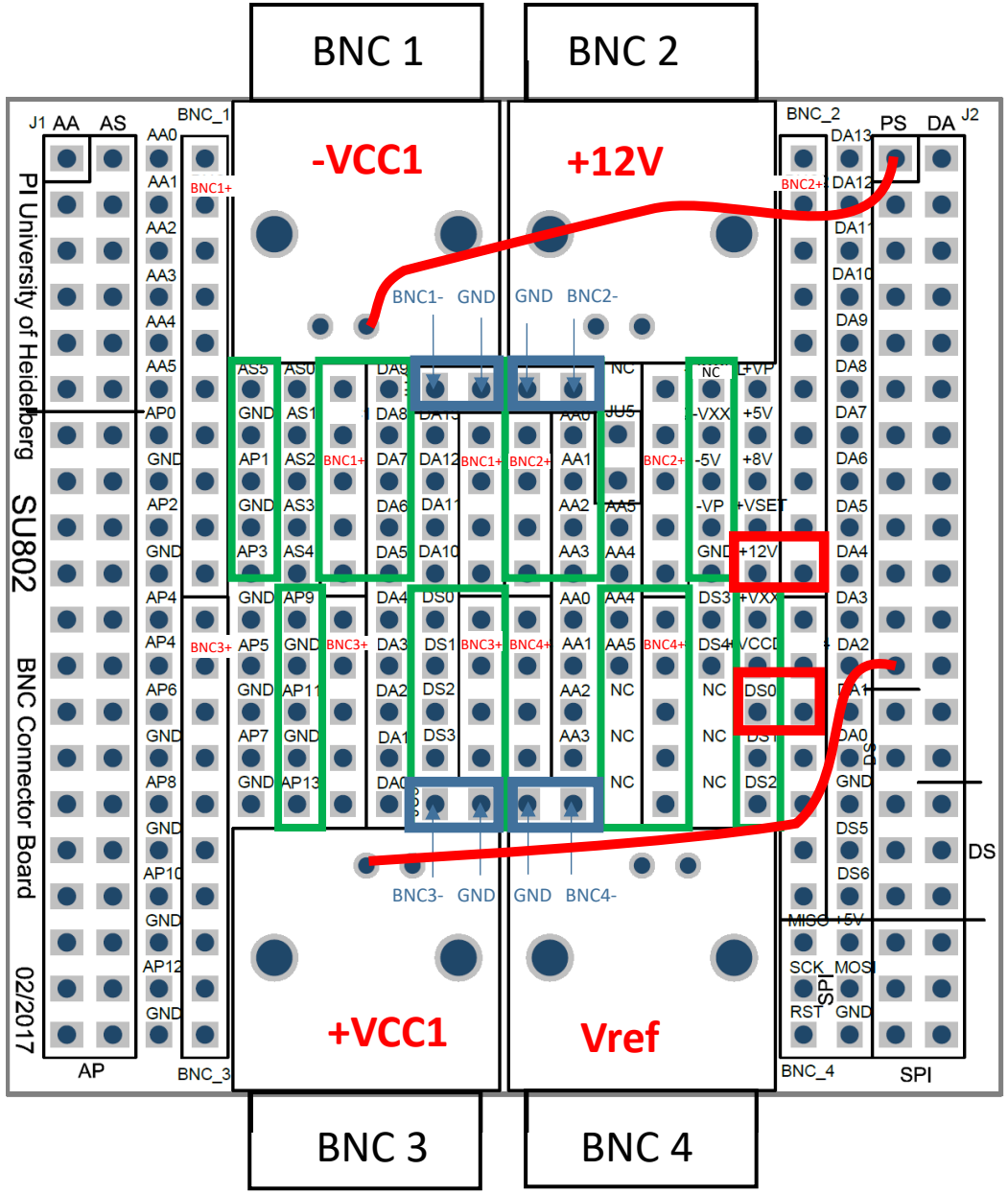

DL801 (DL800)

-VCC1	(-VCC_DL)	1	2	DA13
-VP2	(-VXX)	3	4	DA12
-5V		5	6	DA11
-VP1	(-Vp)	7	8	DA10
GND		9	10	DA9
+VP		11	12	DA8
+5V		13	14	DA7
+VCC2	(+8V)	15	16	DA6
+VSET1	(Vset)	17	18	DA5
+12V		19	20	DA4
+VSET2	(+VXX)	21	22	DA3
+VCC1		23	24	DA2
DS0/REF		25	26	DA1
DS1/+3,3V		27	28	DA0
DS2		29	30	GND
DS3		31	32	DS5
DS4		33	34	(DS6) -VCC2
SPI_MISO		35	36	+5V
SPI_SCK		37	38	SPI_MOSI
SPI_RST		39	40	GND

Default Values:

-VCC1:	-7V (-13V/-24V)
-VP2:	-2,7V
-VP1:	-6V
-VCC2:	-13V (-24V)
+VP: =	+VSET1
+VCC2:	+7V
+VSET1:	+6V
+VSET2:	+18V
+VCC1:	+13V (+24V)

e-lego module

BNC Connector board SU 802

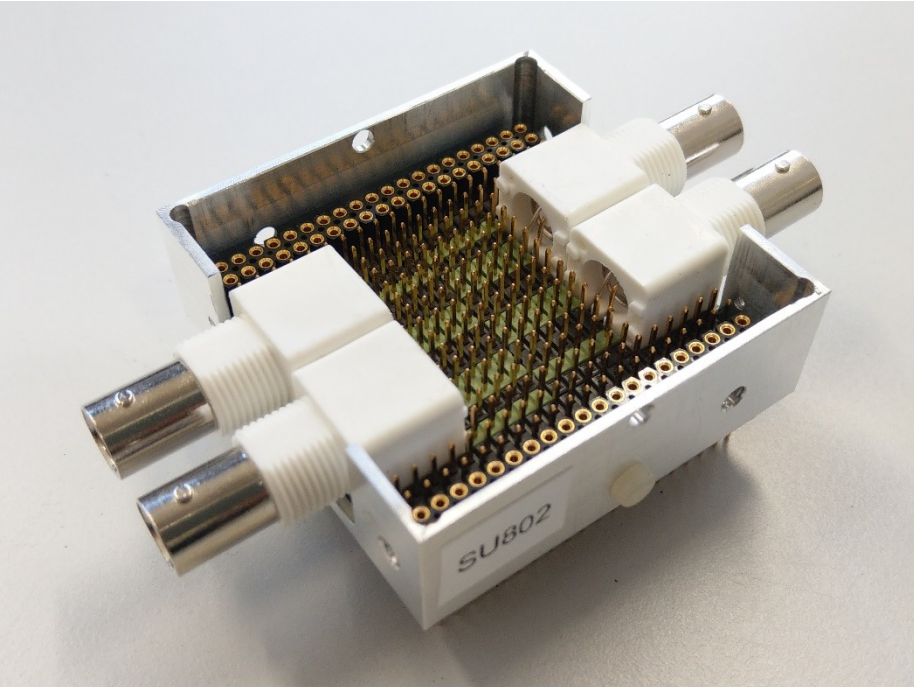

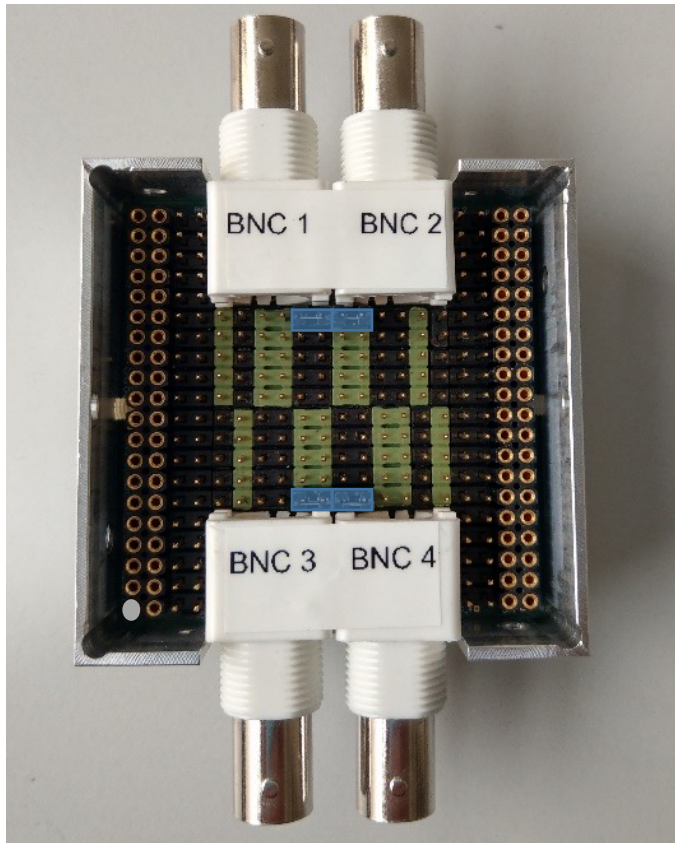

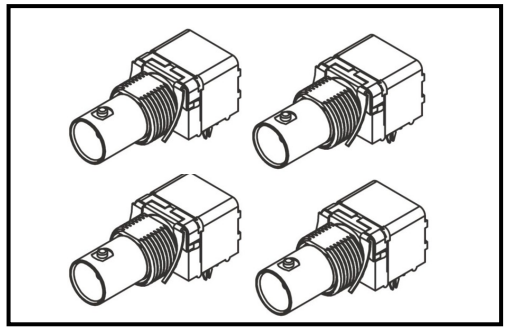

- **4 BNC** connectors
- **Pin rows** to connect different signals to the BNCs via **Jumper or Jumper cable**

\\147.142.16.140\geraete\Geraete\SU\SU802_BNC_Connector_Board

BNC Connector Board
SU 802

Blue: Standard jumper settings

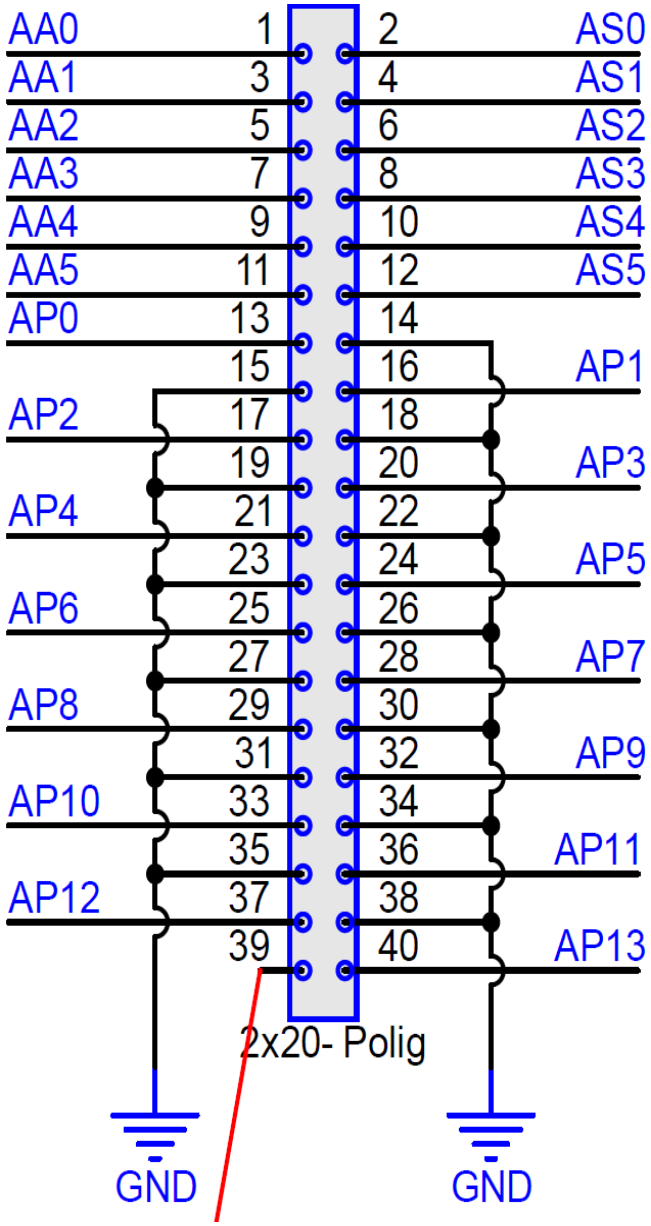

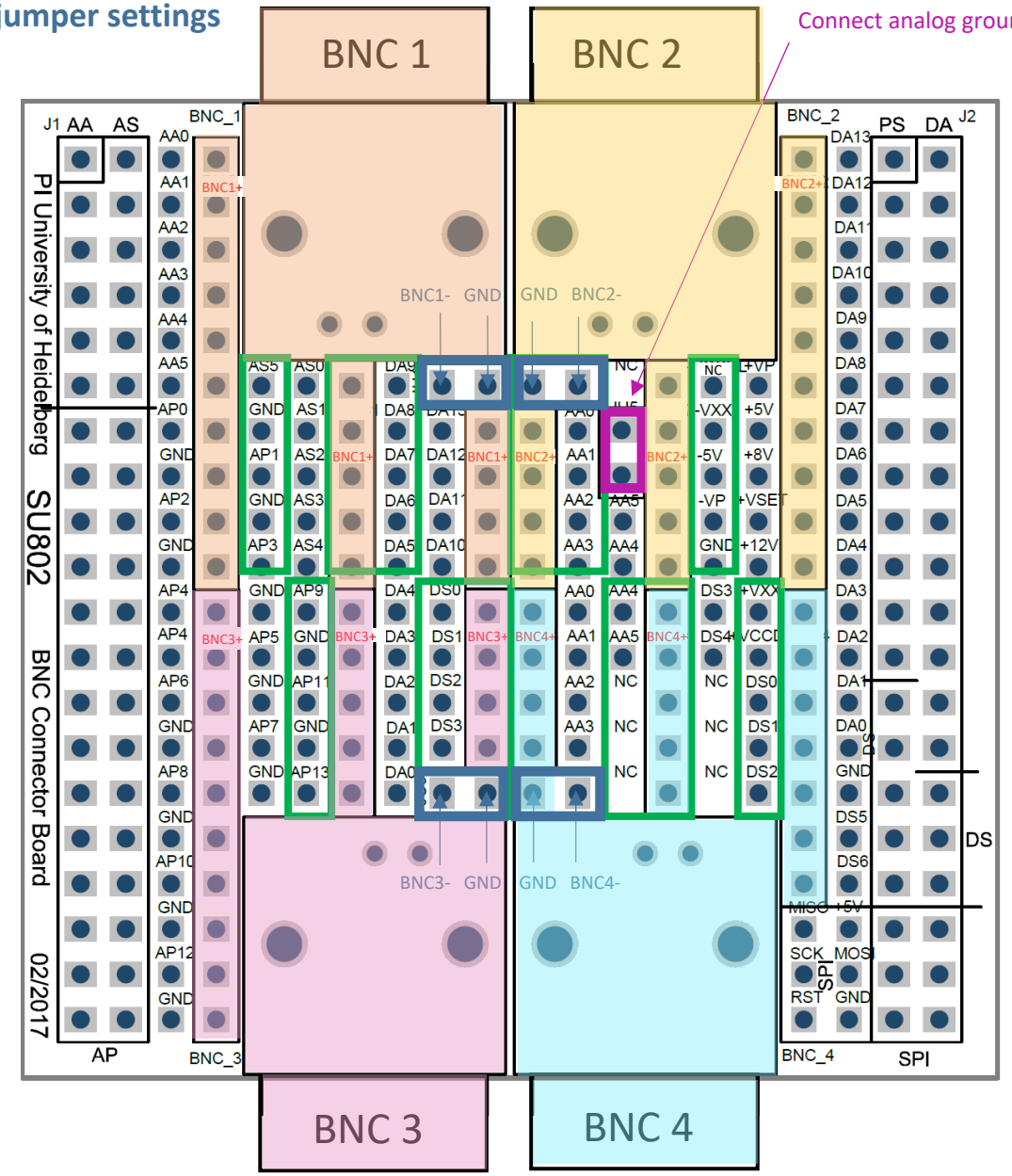

DL801 (DL800)

-VCC1 (-VCC_DL)	1	2		DA13
-VP2 (-VXX)	3	4		DA12
-5V	5	6		DA11
-VP1 (-Vp)	7	8		DA10
GND	9	10		DA9
+VP	11	12		DA8
+5V	13	14		DA7
+VCC2 (+8V)	15	16		DA6
+VSET1 (Vset)	17	18		DA5
+12V	19	20		DA4
+VSET2 (+VXX)	21	22		DA3
+VCC1	23	24		DA2
DS0/REF	25	26		DA1
DS1/+3,3V	27	28		DA0
DS2	29	30		GND
DS3	31	32		DS5
DS4	33	34	(DS6)	-VCC2
SPI_MISO	35	36		+5V
SPI_SCK	37	38		SPI_MOSI
SPI_RST	39	40		GND

Default Values:

-VCC1:	-7V (-13V/-24V)
-VP2:	-2,7V
-VP1:	-6V
-VCC2:	-13V (-24V)
+VP: =	+VSET1
+VCC2:	+7V
+VSET1:	+6V
+VSET2:	+18V
+VCC1:	+13V (+24V)

BNC Connector Board
SU 802

Blue: Standard jumper settings

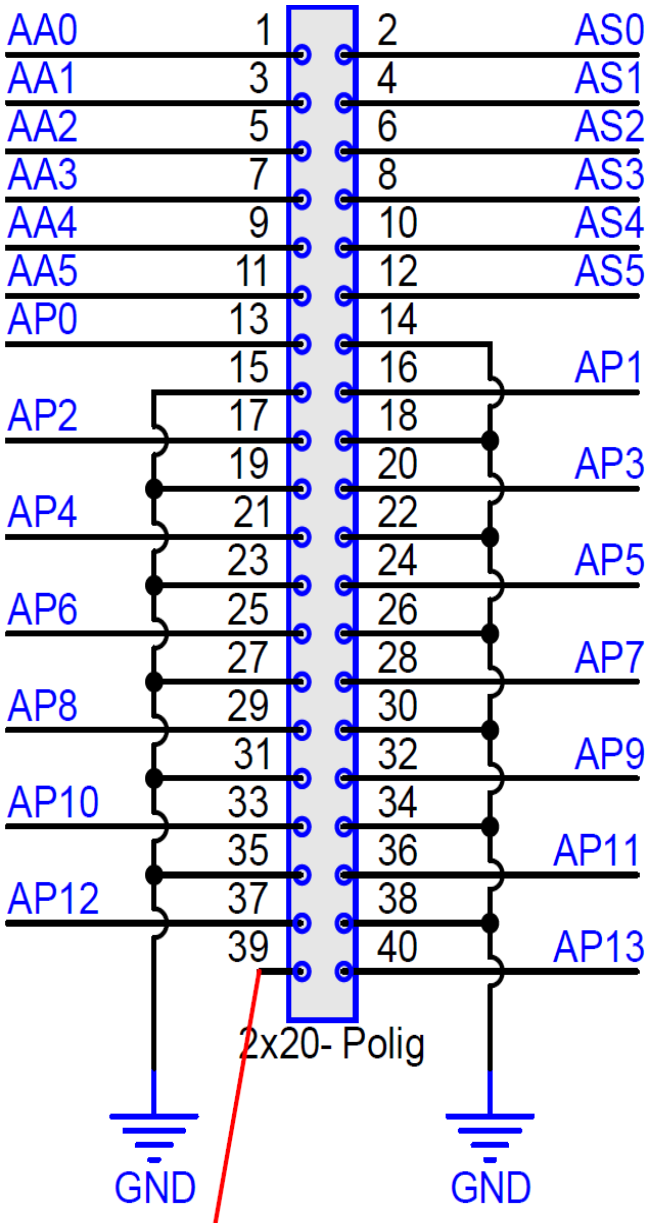

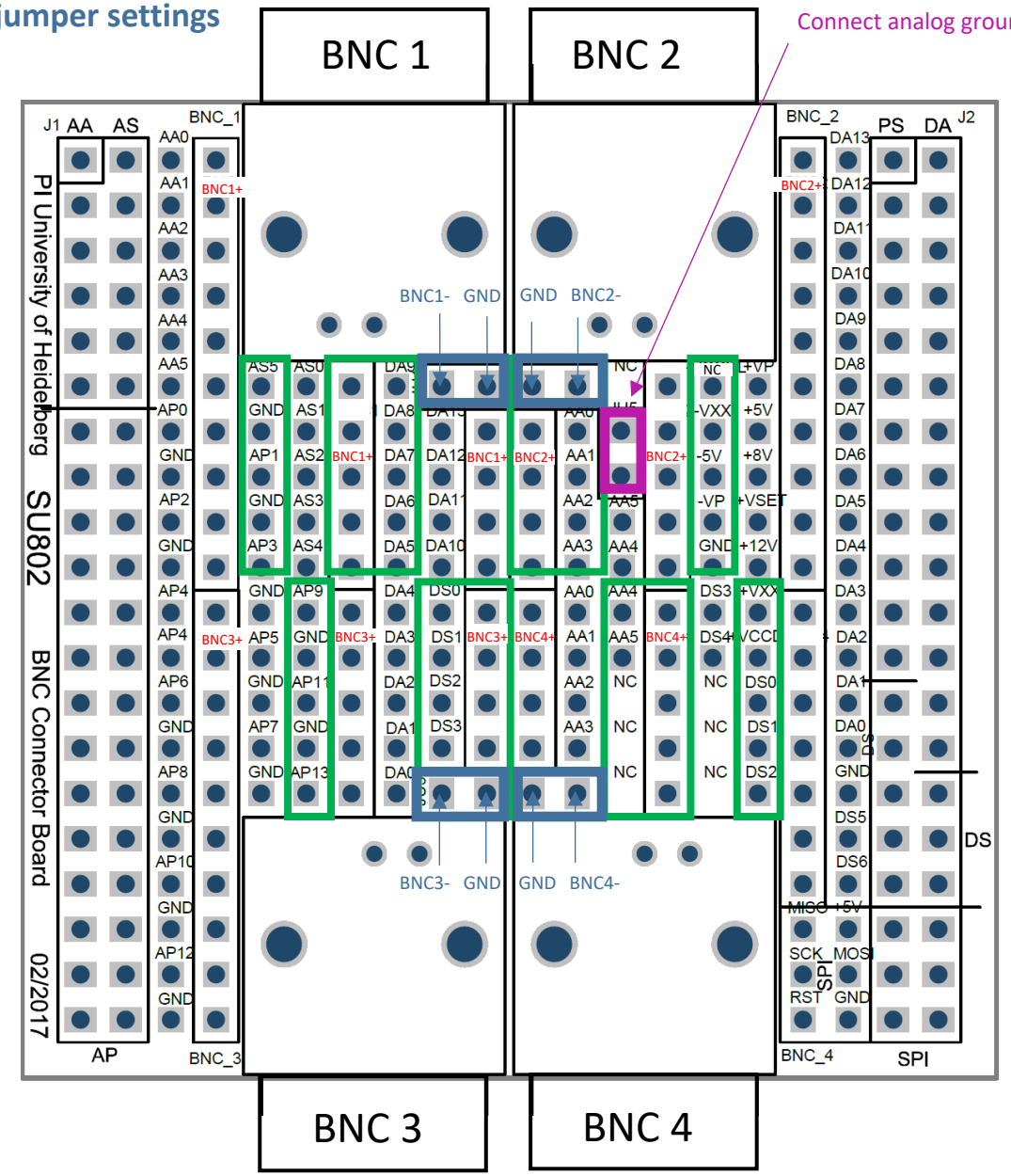

DL801 (DL800)

-VCC1 (-VCC_DL)	1	2	DA13
-VP2 (-VXX)	3	4	DA12
-5V	5	6	DA11
-VP1 (-Vp)	7	8	DA10
GND	9	10	DA9
+VP	11	12	DA8
+5V	13	14	DA7
+VCC2 (+8V)	15	16	DA6
+VSET1 (Vset)	17	18	DA5
+12V	19	20	DA4
+VSET2 (+VXX)	21	22	DA3
+VCC1	23	24	DA2
DS0/REF	25	26	DA1
DS1/+3,3V	27	28	DA0
DS2	29	30	GND
DS3	31	32	DS5
DS4	33	34 (DS6)	-VCC2
SPI_MISO	35	36	+5V
SPI_SCK	37	38	SPI_MOSI
SPI_RST	39	40	GND

Default Values:

-VCC1:	-7V (-13V/-24V)
-VP2:	-2,7V
-VP1:	-6V
-VCC2:	-13V (-24V)
+VP: =	+VSET1
+VCC2:	+7V
+VSET1:	+6V
+VSET2:	+18V
+VCC1:	+13V (+24V)

SU802 Notes production

- **Make sure all pins in the center have the same size.** This is important that the jumpers and especially the jumper wires fit well and can be reused and don't fall off.

- Check for the latest production version and check for additional notes on the workshop server

- **Add Polarity Protection**: Pin 39: Top: Block pin with solder. Bottom: Cut pin

- Set factory jumper settings **(4 Jumpers).** See picture

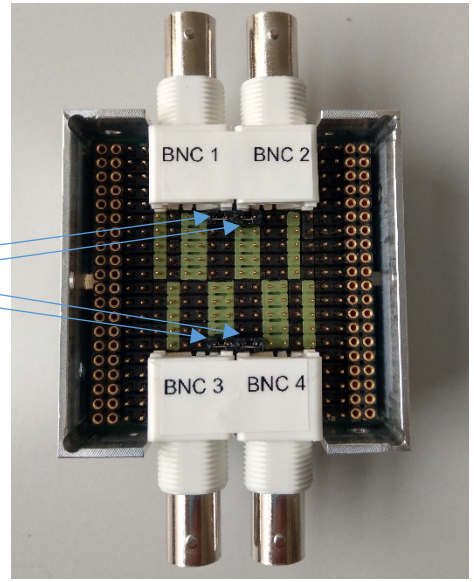

- Label BNC 1 to BNC 4

- Put PCBs into Aluminium case. Drawings of the cases can be found here:
  \\pi2\microcontroller\QD-Ultracold\Q-El - e-lego\Cases and Heatsink Needed: **Case BNC**

- Label the finished boxes with the Part-number **SU802**
- **Label the BNC connectors** (ontop of the BNC connectors - see picture): **BNC 1, BNC 2, BNC 3, BNC 4**
- **Label the BNC connectors** (on the case at the side of the connectors): **1, 2, 3, 4**

- Add some notes to the workshop server if there has been some modifications to the previous production version

- If not available yet, make pictures of the produced component an put them on the workshop server

- If not available yet, leave one module in the e-workshop Muster box and label it with „Muster E-Werkstatt“

e-lego module

BNC Patch board SU815

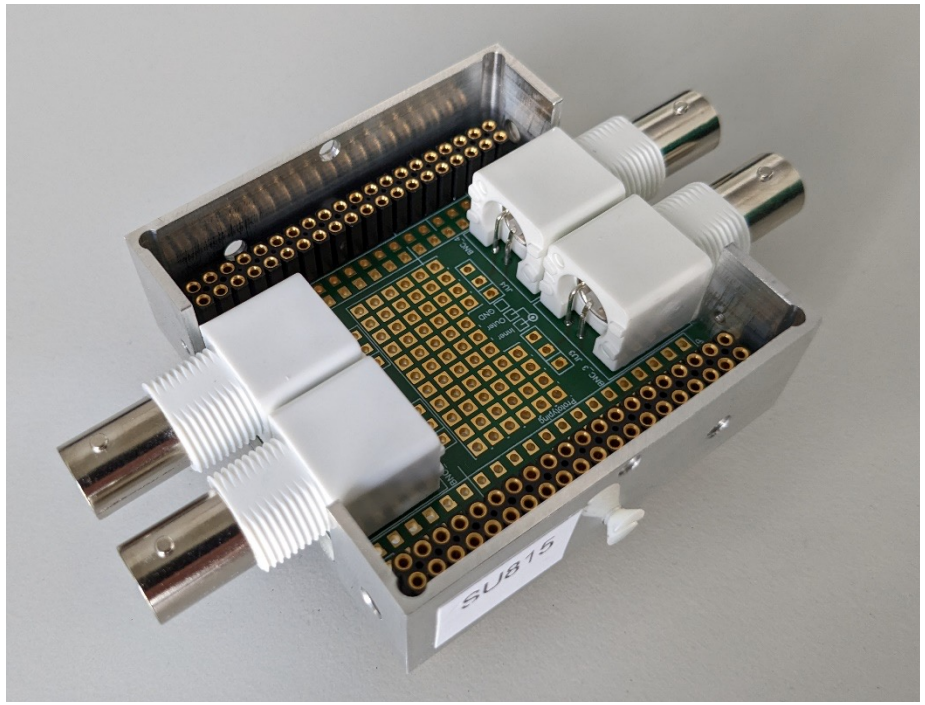

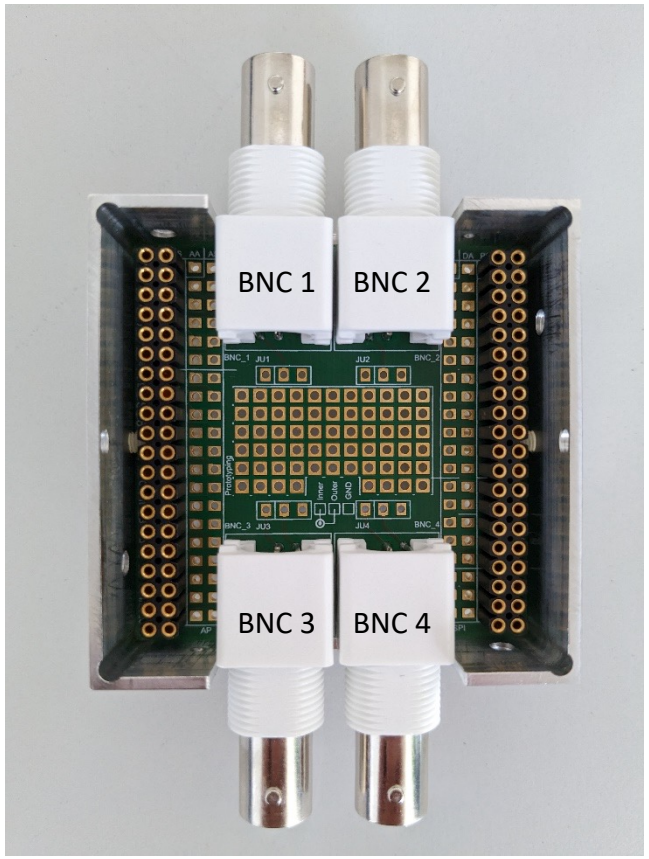

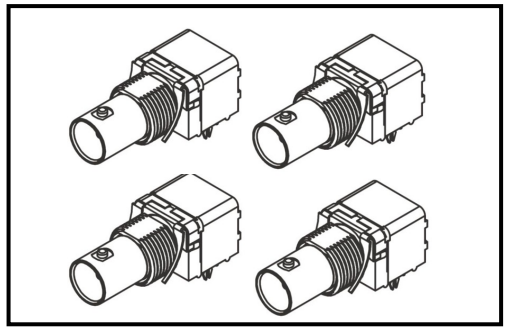

- **4 BNC** connectors
- **Pads** for inner an outer pin of the BNC conncter for connecting to the e-lego I/Os
- **Evaluation area** in the center for putting additional components

\\147.142.16.140\geraete\Geraete\SU\SU815_BNC_Patch_Board

SU815 Notes production

- Check for the latest production version and check for additional notes on the workshop server

- **Add Polarity Protection**: Pin 39: Top: Block pin with solder. Bottom: Cut pin

- Put PCBs into Aluminium case. Drawings of the cases can be found here:
  \\pi2\microcontroller\QD-Ultracold\Q-El - e-lego\Cases and Heatsink Needed: **Case BNC**

- Label the finished boxes with the Part-number **SU815**
- **Label the BNC connectors** (ontop of the BNC connectors - see picture): **BNC 1, BNC 2, BNC 3, BNC 4**
- **Label the BNC connectors** (on the case at the side of the connectors): **1, 2, 3, 4**

- Add some notes to the workshop server if there has been some modifications to the previous production version

- If not available yet, make pictures of the produced component an put them on the workshop server

- If not available yet, leave one module in the e-workshop Muster box and label it with „Muster E-Werkstatt“

Q-Ar008 Delta Power Supply - Control, Monitor and Shutdown

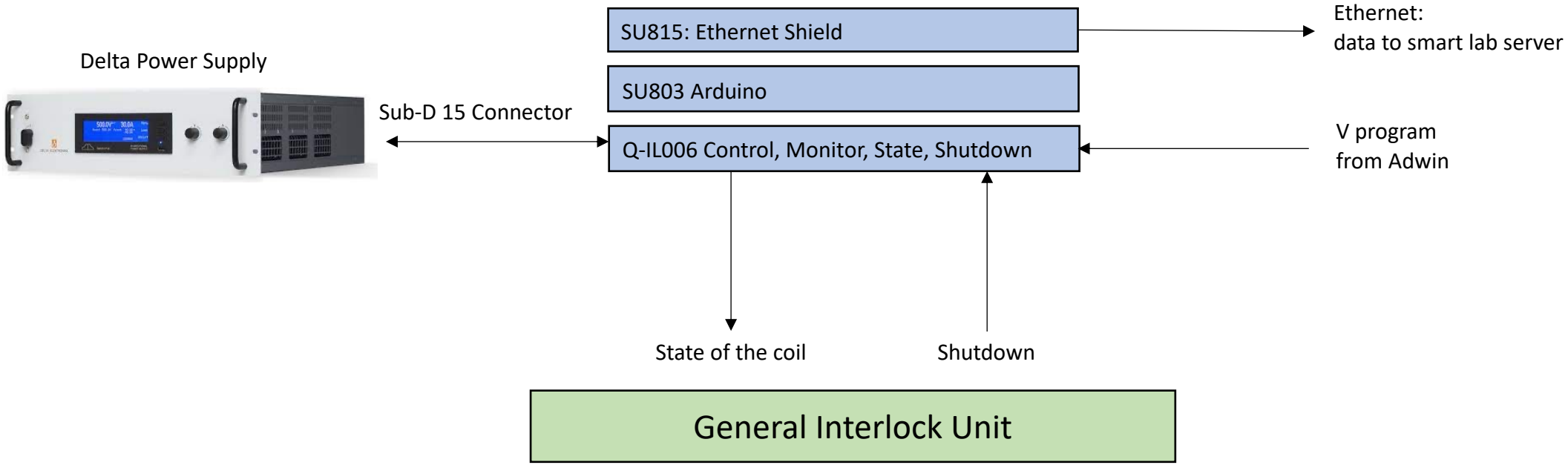

e-lego unit

Q-IL006 Remote Shutdown, Monitor and Control of Delta PS for e-lego Arduino

e-lego unit

Use blank BNC Patch board SU815 + 3 BNC connectors + elego Case PD Ampl. SU800

schematic

DA9/BNC 1

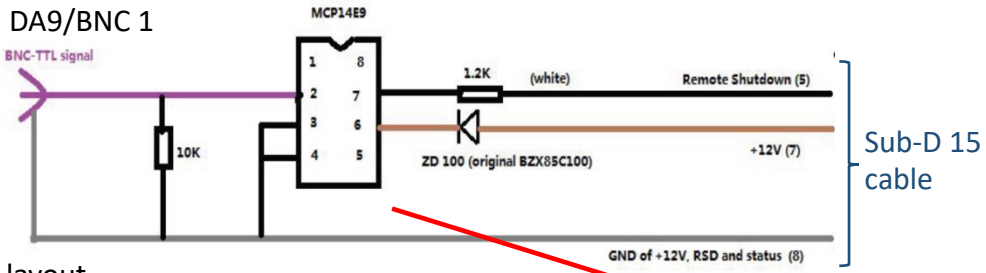

layout

DA9 / BNC1

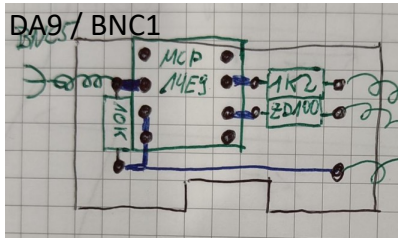

Circuit around MCP14E9

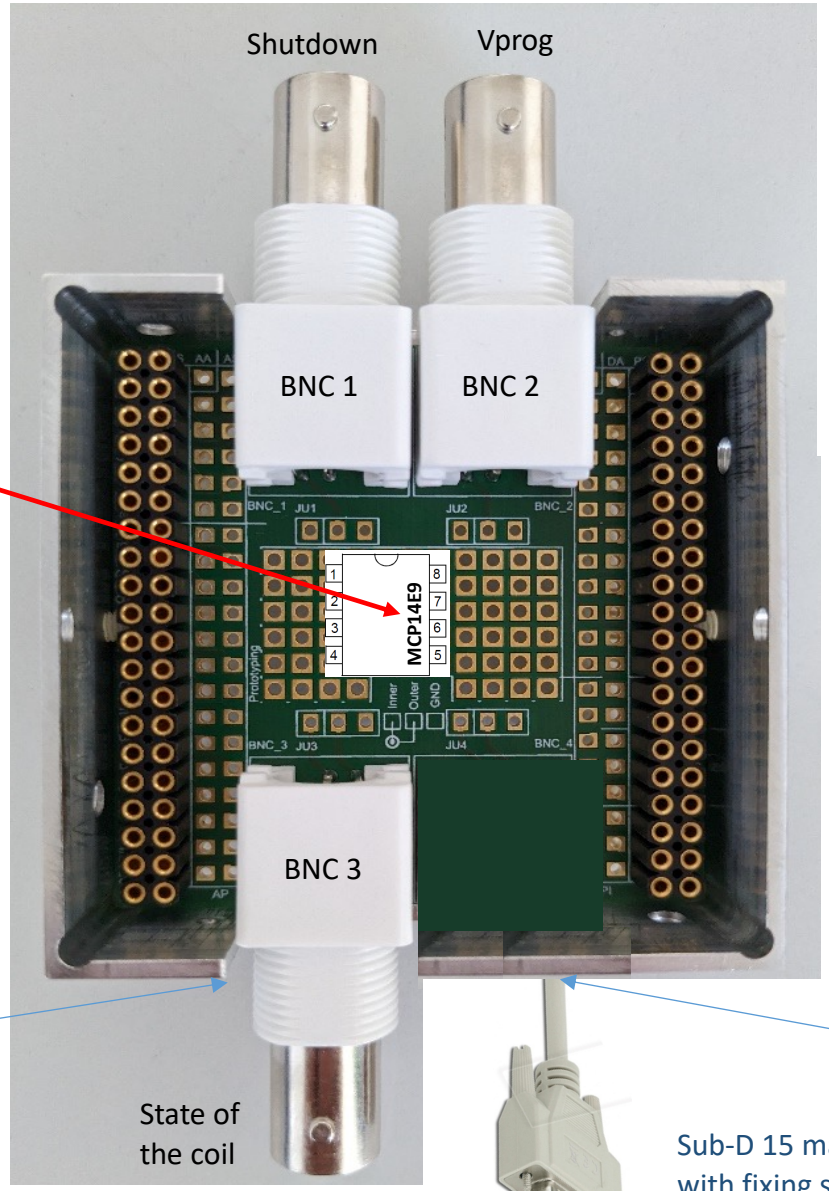

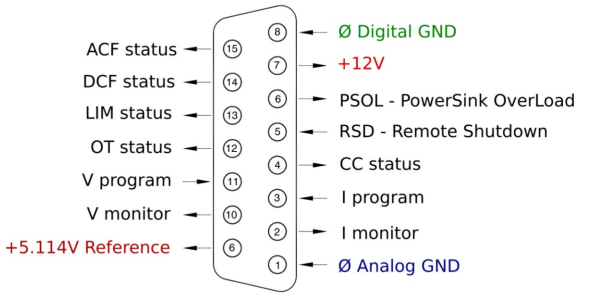

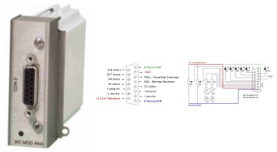

Machine slot for BNC 3

Drill hole for Sub-D 15 cable

Sub-D 15 male connector with fixing screws and 1m cable

BNC to Sub-D / MCP14E9 connections

BNC 1+	TTL to MCP14E9
BNC 1-	Digital GND
BNC 2+	Vprog
BNC 2-	Analog GND
BNC 3+	DA10 (State of the coil, Digital out)
BNC 3-	Digital GND
AA0	I monitor
AA1	V monitor
GND e-lego	Analog GND
DA9	TTL to MCP14E9 (Digital in)
GND e-lego	Digital GND

https://www.elso.sk/en/rozsirenia-pre-zdroje-delta-elektronika/delta-elektronika-int-mod-ana-3003.html
https://www.mouser.de/ProductDetail/Microchip-Technology/MCP14E9-E-P?qs=MXv2%2Fr3mQXJibl7rJkL3fw%3D%3D&mgh=1&vip=1&gclid=EAIaIQobChMIseLHtpjb_gIVvAUGAB1BjQ5uEAQYASABEgLtRPD_BwE
https://www.reichelt.de/d-sub-kabel-15-pinstecker-stecker-beige-grau-1-0-m-delock-85975-p285727.html?PROVID=2788&gclid=EAIaIQobChMI4s6m-5jb_gIVPoCDBx3FEQHnEAQYAiABEgIcKfD_BwE

Q-IL005 Remote Shutdown, Monitor and Control of Delta PS

Use blank BNC Patch board SU815 + 4 BNC connectors + elego Case BNC

e-lego unit

schematic

BNC 5

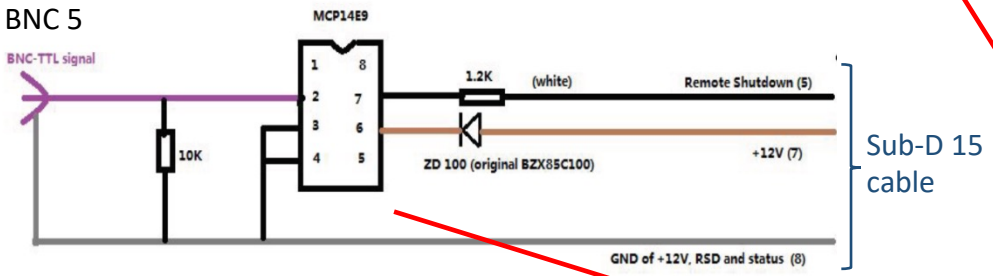

layout

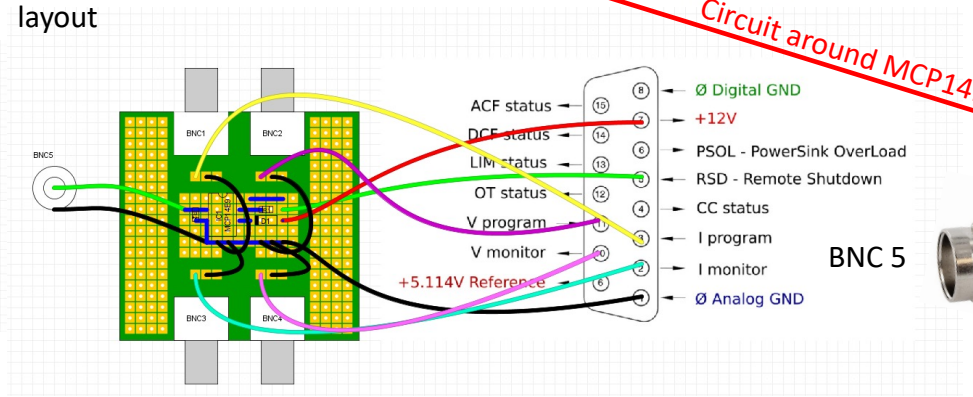

no pin strip

Circuit around MCP14E9

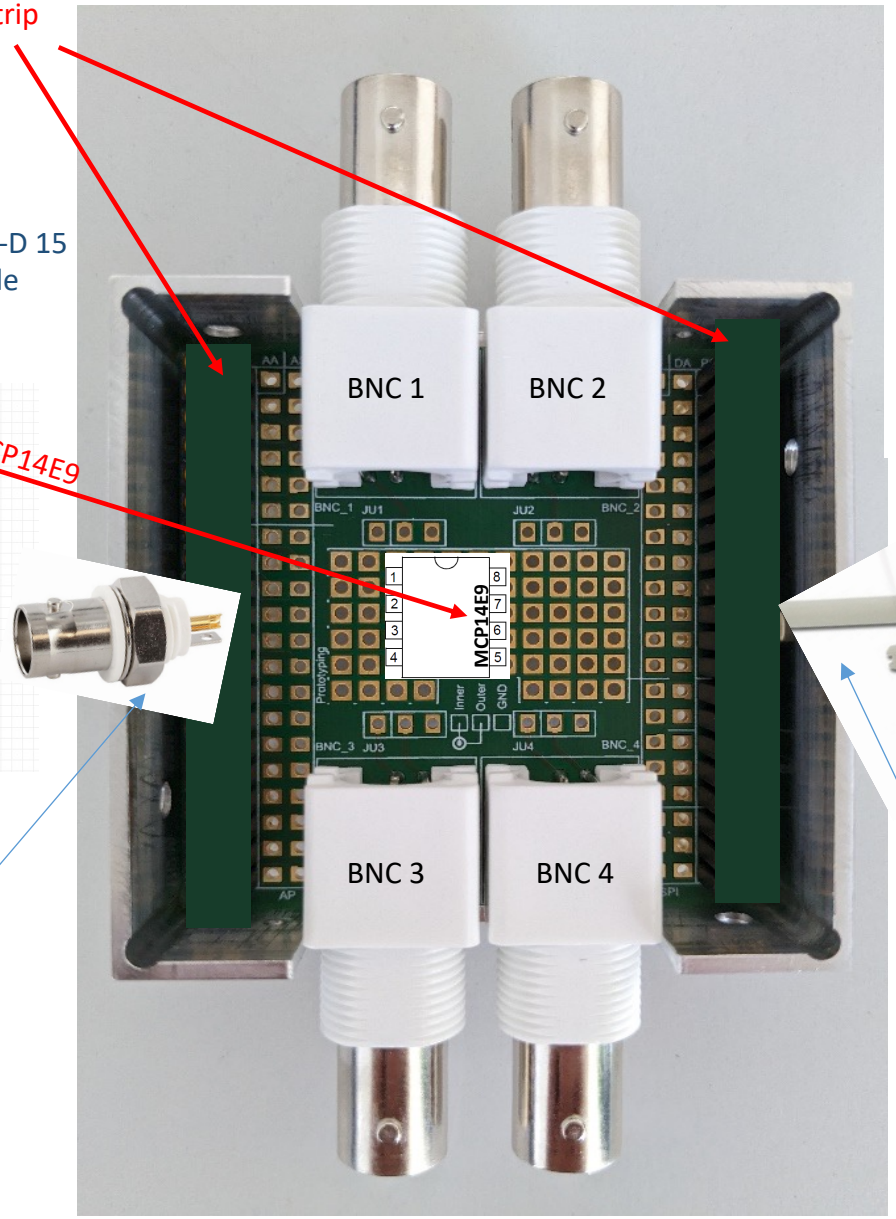

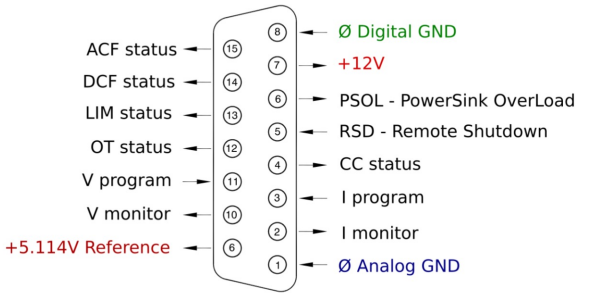

BNC 5

Sub-D 15 male connector with fixing screws and 1m cable

Drill hole for BNC connector

Drill hole for Sub-D 15 cable

BNC to Sub-D / MCP14E9 connections

BNC 1+	Iprog
BNC 1-	Analog GND
BNC 2+	Vprog
BNC 2-	Analog GND
BNC 3+	Imon
BNC 3-	Analog GND
BNC 4+	Vmon
BNC 4-	Analog GND
BNC 5+	TTL to MCP14E9
BNC 5-	Digital GND

https://www.elso.sk/en/rozsirenia-pre-zdroje-delta-elektronika/delta-elektronika-int-mod-ana-3003.html
https://www.mouser.de/ProductDetail/Microchip-Technology/MCP14E9-E-P?qs=MXv2%2Fr3mQXJibl7rJkL3fw%3D%3D&mgh=1&vip=1&gclid=EAIaIQobChMIseLHtpjb_gIVvAUGAB1BjQ5uEAQYASABEgLtRPD_BwE
https://www.reichelt.de/d-sub-kabel-15-pinstecker-stecker-beige-grau-1-0-m-delock-85975-p285727.html?PROVID=2788&gclid=EAIaIQobChMI4s6m-5jb_gIVPoCDBx3FEQHnEAQYAiABEgIcKfD_BwE

9) AN A LOG PRO GRAMMING

The out put voltage and cur rent can be programmed by an ex ternal an alog voltage. This pro gramming is very ac curate and lin ear. The lev els are all standardized on 5 V.

Standard the SM300-20 and SM600-10 are equipped with the ISO-AMP, see next paragraph.

For the other units, the in puts have a protection circuit formed by a series re sis tor and a par al lel zener (see fig. 3 - 4). The ca pacitor limits the speed to a safe value. Note that the an alog in puts (and outputs) are not floating, but the common is connected to the negative output terminal. Wrong con nec tion of Ø can cause earth loops which can trip the fuse. After re moving the fault, the fuse will re set (PTC-fuse). For iso lated pro - gramming see next para graph.

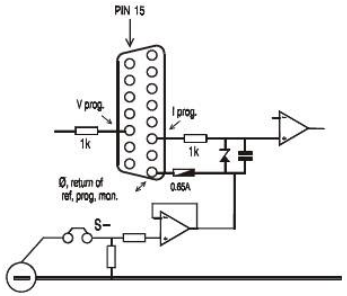

fig. 3 - 4

Pro gram ming in puts (in ter nal cir cuit)

10) ISO LATED AN A LOG PRO GRAMMING

To pre vent earth loops which can cause pro gramming er rors, use an iso - lated pro gramming source. If this is not pos sible, use the op tional ISO AMP CARD (ô-prod uct) which can be built in side the unit.
With the ISO AMP CARD earth loops be tween the unit and the pro gram- ming source are prevented.

11) ETH / IEEE488 / RS232 / CAN / PROFI PRO GRAM MING

The Delta Elektronika PSC-ETH, PSC-488, PSC-232, PSC CAN and PSC PROFI con trollers can be factory in stalled in side the unit.

Voltage and cur rent can easily be pro grammed and read back. Also all the status outputs can be read by the computer.

12) MON I TORING OUT PUTS

The mon itor outputs give a voltage 0 - 5 V pro portional to the out put cur - rent or voltage. The output cur rent can easily be mea sured us ing the I-mon i tor (see fig. 3 - 6). The mon itor outputs are buffered with op-amp's and pro tected with se ries re sistors and parallel zeners (see fig. 3 - 7). The table in fig. 3 - 5 shows the impedance lev els of the mon itoring out puts.

For us ing Imon on a pul sating load, see paragraph 20) of this chap ter.

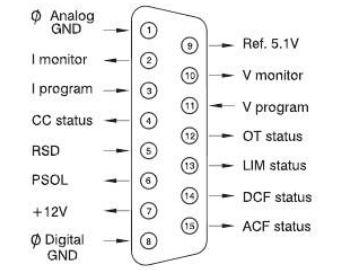

pin De scrip tion, see par 12) 17) for details	
1	Ø, re turn of ref erence, prog. in puts and monitor outputs (Ro = 1.2 Ohm).
2	current mon itor output 0 - 5 V (Ro = 1.2 Ohm, Io max = 4 mA)
3	current pro gramming in put (0 - 5 V), Ri = 8 MOhm
4	CC sta tus output, logic 1 = CC mode (5 V / 500 Ohm)
5	Re mote ShutDown (4 - 12 V), Ri = 5 kOhm
6	PSOL sta tus output, logic 1 = PSOL (5 V / 500 Ohm)
7	+12 V output (Ro = 3 Ohm, Io max = 0.2 A)
8	Ø, re turn of sta tus outputs, +12 V and Remote ShutDown
9	ref er ence volt age 5.1 V (Ro = 1.2 Ohm, Io max = 4 mA)
10	voltage mon itor output 0 - 5 V Ro = 1.2 Ohm, Io max = 4 mA)
11	voltage pro gramming in put (0 - 5 V) Ri = 8 MOhm
12	OT - sta tus output, logic 1 = OT (5 V / 500 Ohm)
13	LIM - status output, logic 1 = LIM (5 V / 500 Ohm)
14	DCF - sta tus output, logic 1 = DCF (5 V / 500 Ohm)
15	ACF - status output, logic 1 = ACF (5 V / 500 Ohm)

13) +12 V ON PRO GRAMMING CON NECTOR

The +12 V on the pro gramming con nector can be used to sup ply ex ternal circuits. The out put is current limited, but should not be overloaded. The fuse F27_3 on P598 could blow. The fuse F27_3 also protects the in ternal circuit, in case an ex ternal high volt age is ap plied by ac cident. Note: this fuse is a special 600 V type, al ways re place with the same type.

14) STATUS OUT PUTS

All the status outputs are logic out puts. Logic "0" means the out put is 0 V, logic "1" means the out put is 5 V (Ro = 500 Ohm). This makes it pos sible to drive directly: an opto-coupler, a TTL gate or a CMOS gate.

The Limit Sta tus or LIM-status is "1" in case the out put voltage or cur rent reaches the limit setting. Which limit cir cuit is ac tive can be seen on the front panel LED's.

The Over Tem per a ture Sta tus or OT sta tus is "1" in case of an over tem- per a ture, the OT LED will be on and the output shuts down. As a pre-warning the OT LED starts to blink when the unit runs hot but the situ- ation of over tem perature is not reached yet. The status will still be low when the LED is blink ing.

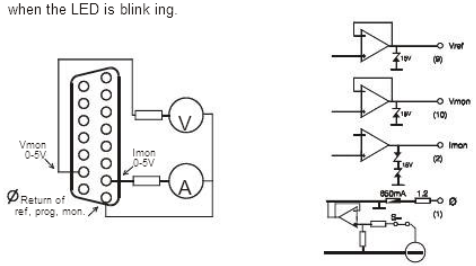

fig. 3 - 6

fig. 3 - 7

https://www.manualslib.com/manual/1258213/Delta-Elektronika-Sm-15-400.html?page=6#manual

e-lego module

Blank Eval board SU 801

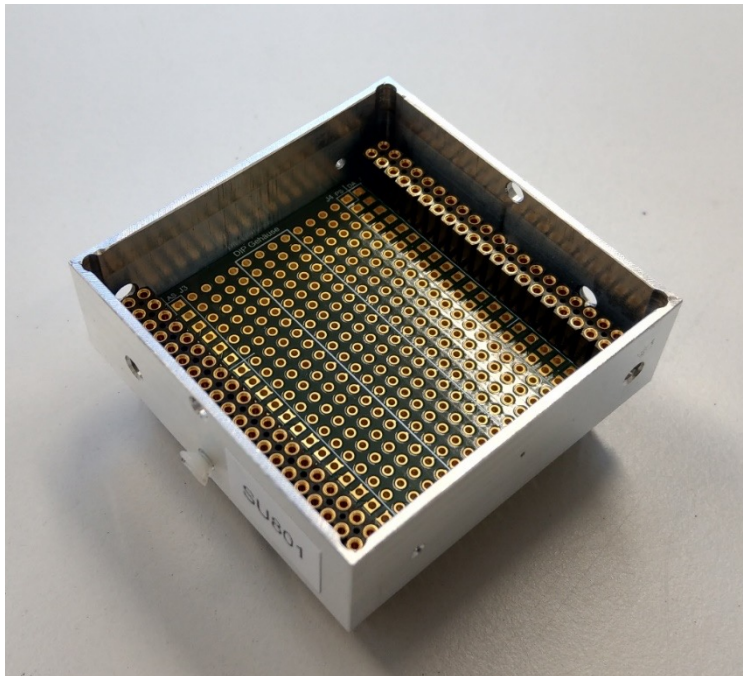

example

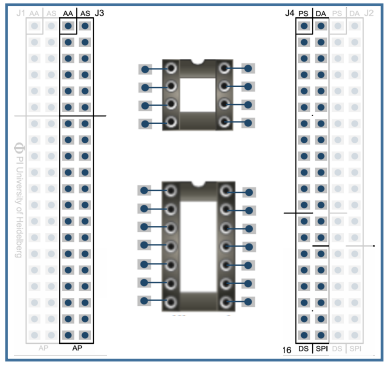

empty evaluation board with a grid of pads including pads for DIP socket

application: built your own circuit

From: electronicdesign.com

Blank Eval board:
SU 801

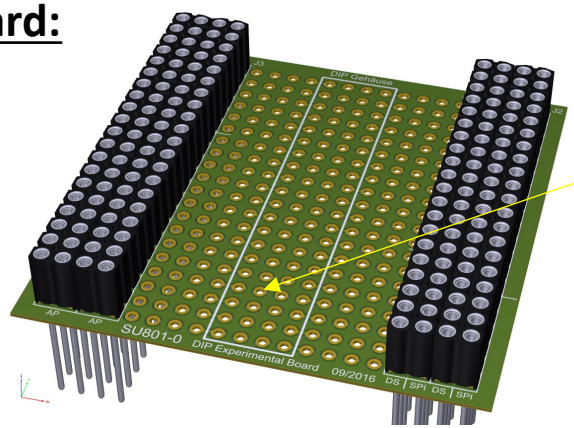

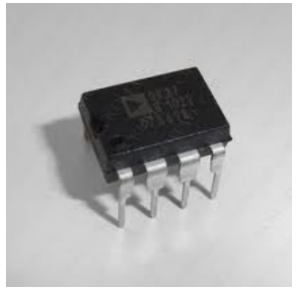

Pad for DIP Socket. Each pin is connected to the neighbouring one as indicated by the yello lines

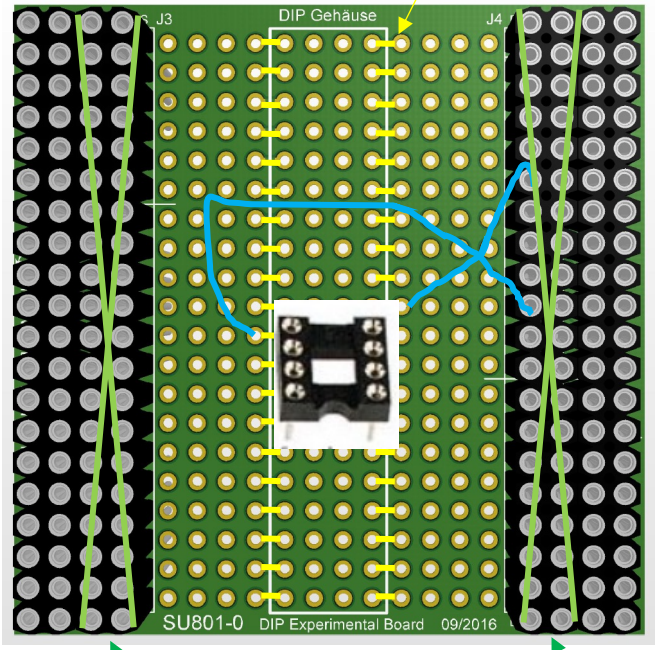

- **DIP Socket PAD** (for easy connection to bus)

Here you can solder your own module !

For production: Do not place the inner Pin rows on the PCB

\\147.142.16.140\geraete\Geraete\SU\SU801_DIP_Experimental_Board

SU802 Notes production

- Check for the latest production version and check for additional notes on the workshop server
- Add Polarity Protection: Pin 39: Top: Block pin with solder. Bottom: Cut pin
- Put PCBs into Aluminium case. Drawings of the cases can be found here:
  \\pi2\microcontroller\QD-Ultracold\Q-El - e-lego\Cases and Heatsink Needed: **Basis Case**
- Label the finished boxes with the Part-number **SU801**
- Add some notes to the workshop server if there has been some modifications to the previous production version
- If not available yet, make pictures of the produced component an put them on the workshop server
- If not available yet, leave one module in the e-workshop Muster box and label it with „Muster E-Werkstatt“

e-lego module

Microcontroller – Arduino Micro Module SU 803

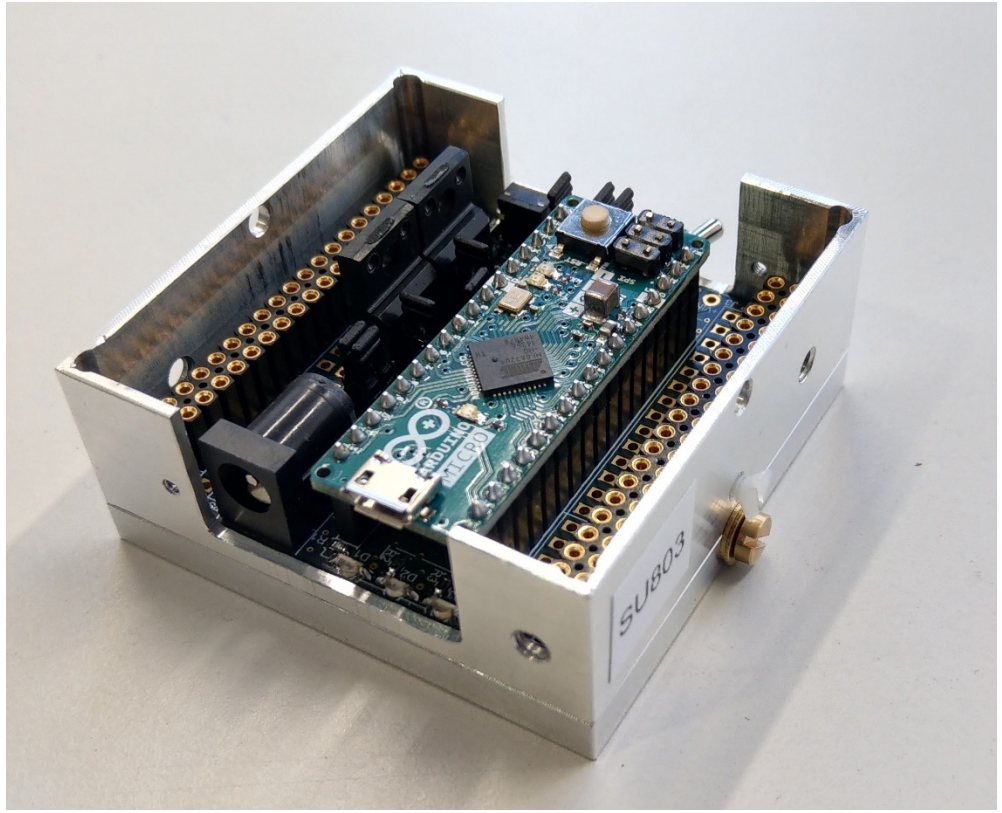

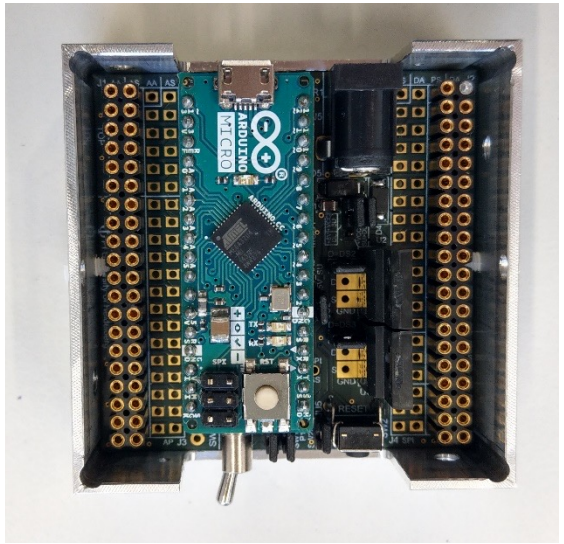

Power Supply: 7.5V
Arduino Micro
Programming via Micro-USB cable
2 Power Mosfets (IRLIZ44)
Status LEDs

Microcontroller – Arduino Micro Module SU 803

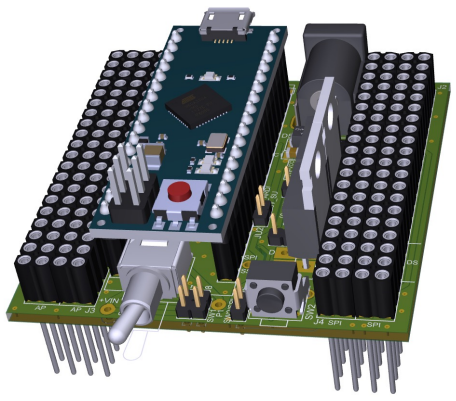

- 1 **Power LED**
- 2 **Status LEDs** (connected to IO pins)
- 1 **Switch** (connected to VS in factory setting)
- 1 **Button** (conenected to reset in factory setting)
- 2 **logic level FETs** (IRLIZ44N) up to 30 A (not via BUS)

Arduiuno Micro

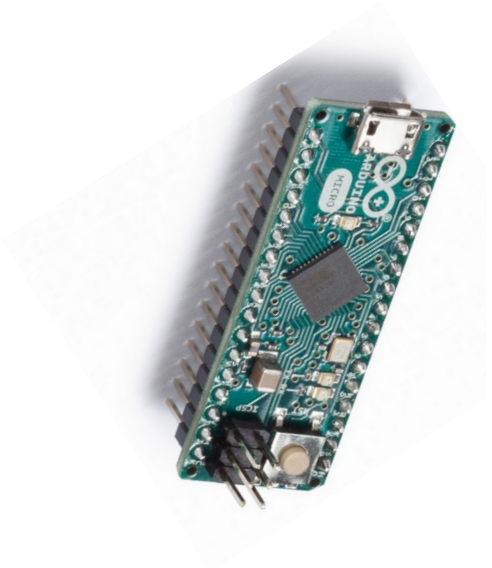

OVERVIEW | TECH SPECS | DOCUMENTATION

Microcontroller	ATmega32U4
Operating Voltage	5V
Input Voltage (recommended)	7-12V
Input Voltage (limit)	6-20V
Digital I/O Pins	20
PWM Channels	7
Analog Input Channels	12
DC Current per I/O Pin	20 mA
DC Current for 3.3V Pin	50 mA
Flash Memory	32 KB (ATmega32U4) of which 4 KB used by bootloader
SRAM	2.5 KB (ATmega32U4)
EEPROM	1 KB (ATmega32U4)
Clock Speed	16 MHz
LED_BUILTIN	13
Length	48 mm
Width	18 mm
Weight	13 g

https://store.arduino.cc/arduino-micro

Arduino Micro Pinout (2013)

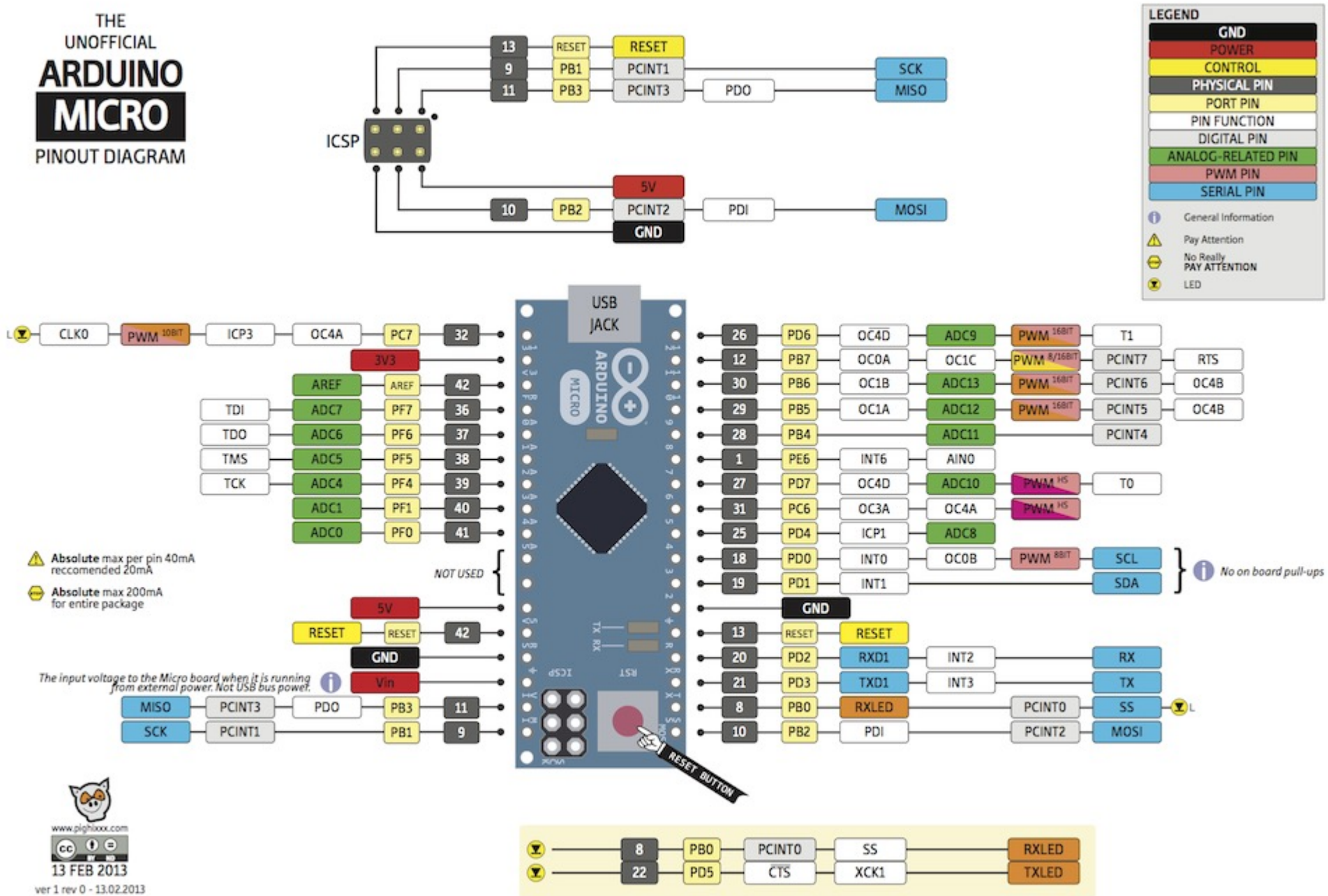

Arduino Micro Pinout (2020)

MAXIMUM current per I/O pin is 40mA

MAXIMUM current per +3.3V pin is 50mA

VIN 6-9 V input to the board.

NOTE: CIPO/COPI have previously been referred to as MISO/MOSI

ARDUINO.CC
Last update: 10/11/2020
CC BY SA

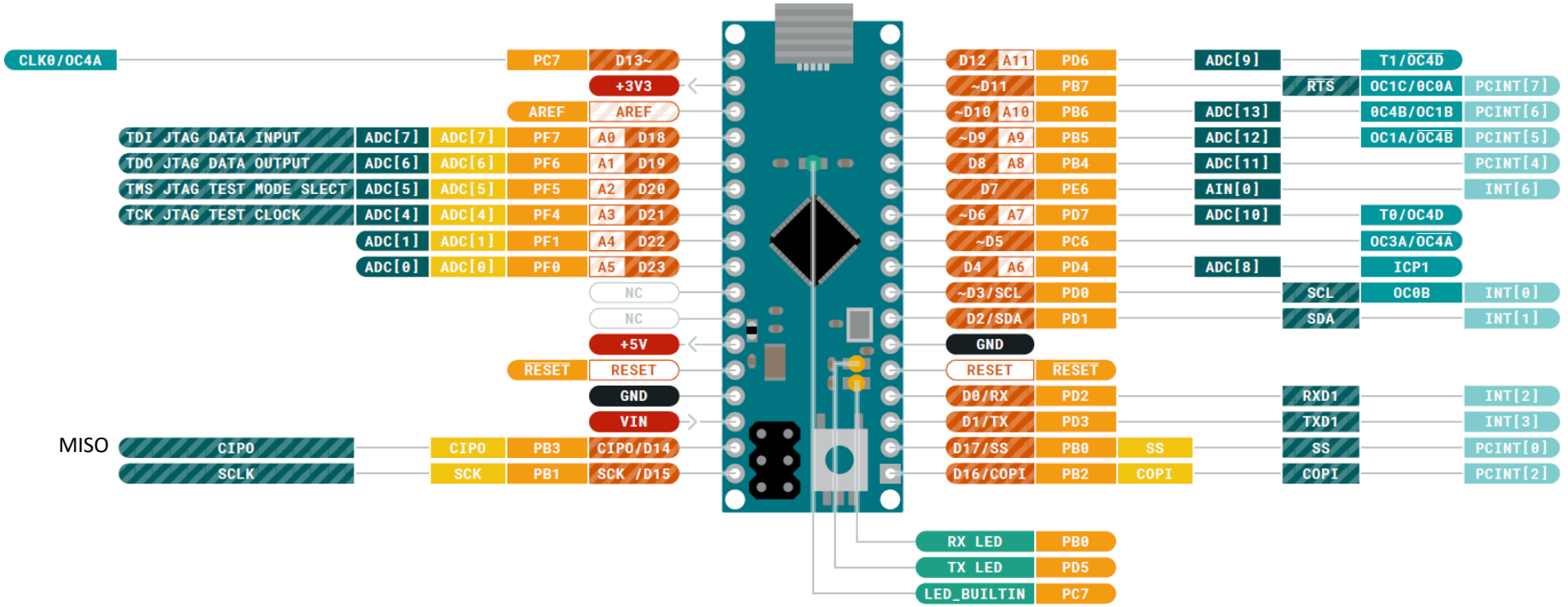

Ground	Digital Pin	Analog
Power	Analog Pin	Communication
LED	Other Pin	Timer
Internal Pin	Microcontroller's Port	Interrupt
SWD Pin	Default	Sercom

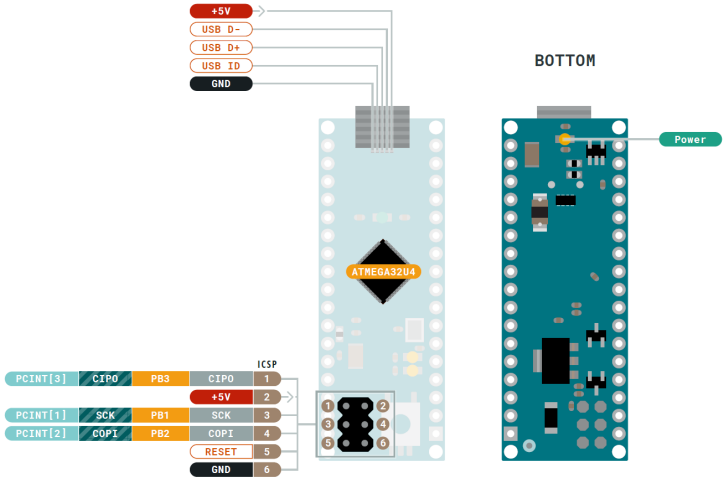

Standard Jumper Settings SU-803

Donnerstag, 18. Mai 2017 19:08

Blue: factory jumper settings.

JU1: chooses the Power Supply source: 2-3: Power Supply input (standard) 2-1: 8V Supply from additional D2-800 elego board

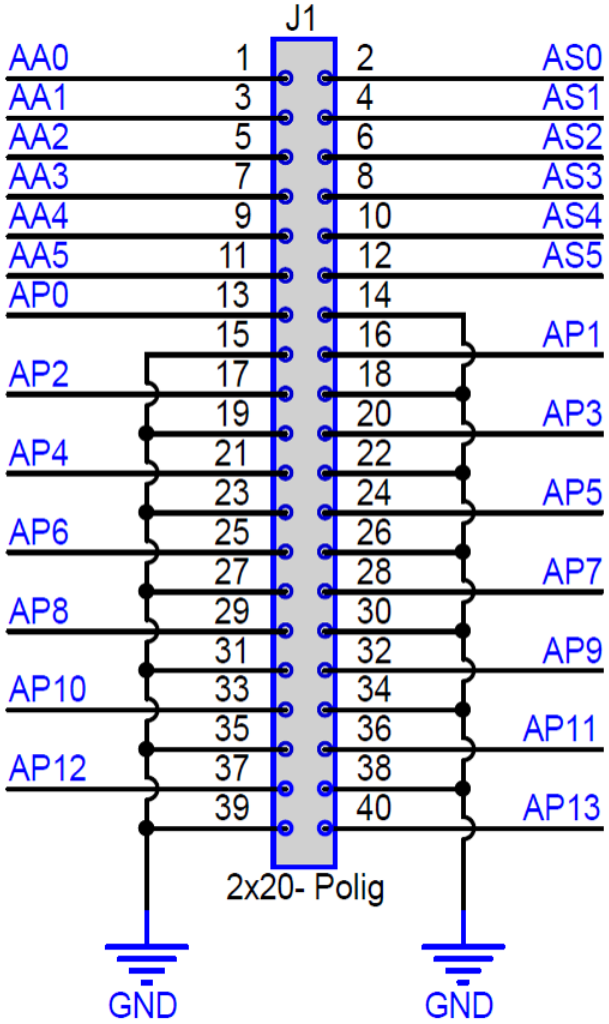

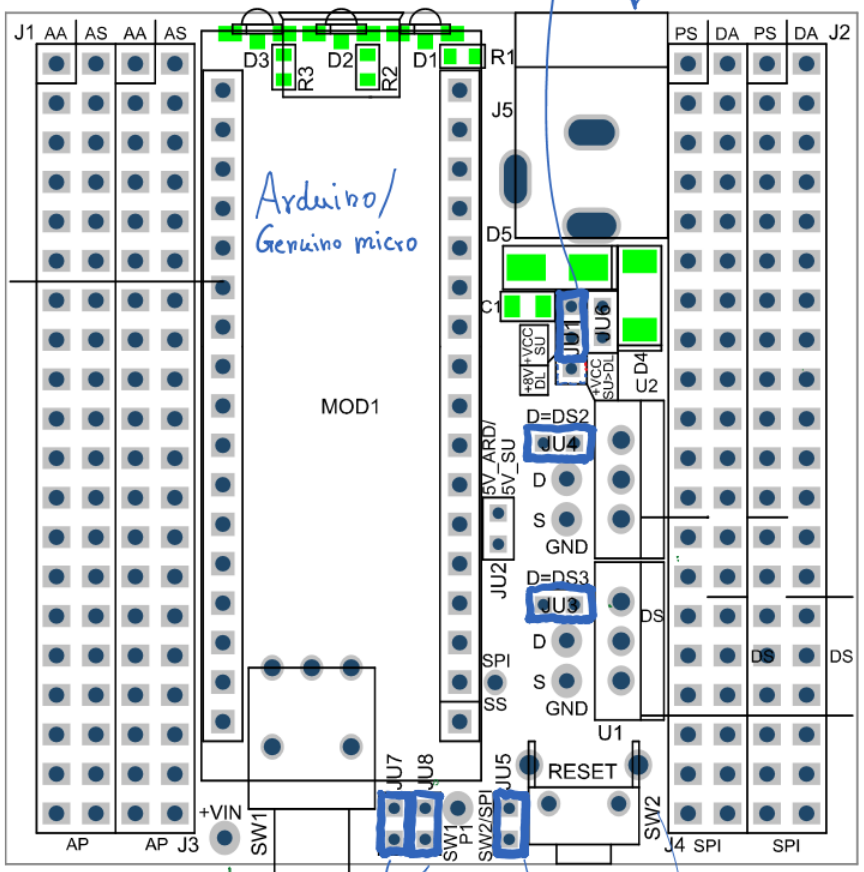

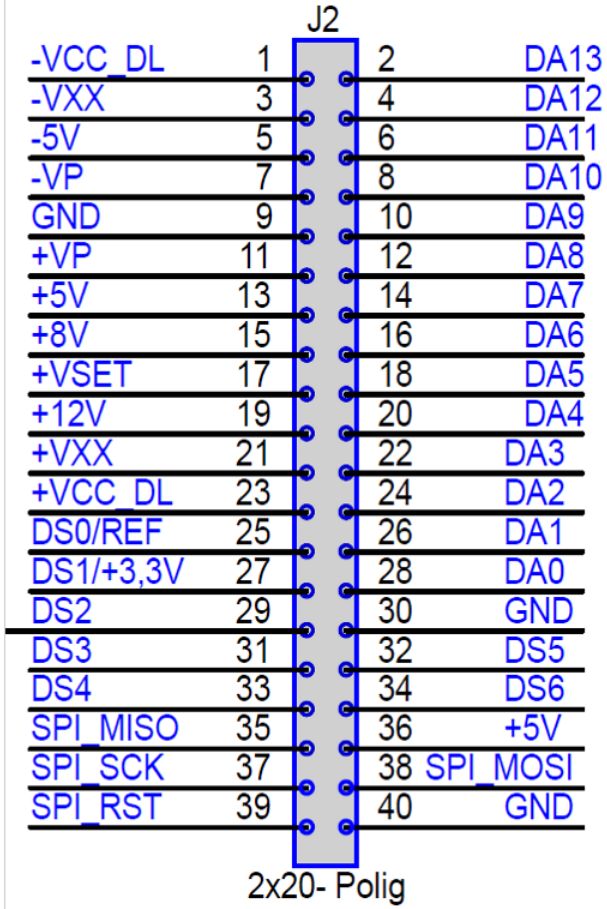

Jumper Settings SU-803

Donnerstag, 18. Mai 2017 19:08

Blue: factory jumper settings.

red: optional settings.

JU1: chooses the Power Supply source: 2-3: Power Supply input (standard) 2-1: 8V Supply from additional DL-800 elego board

JU6: connects Power Supply input to Vcc_DL to be used on further elego boards

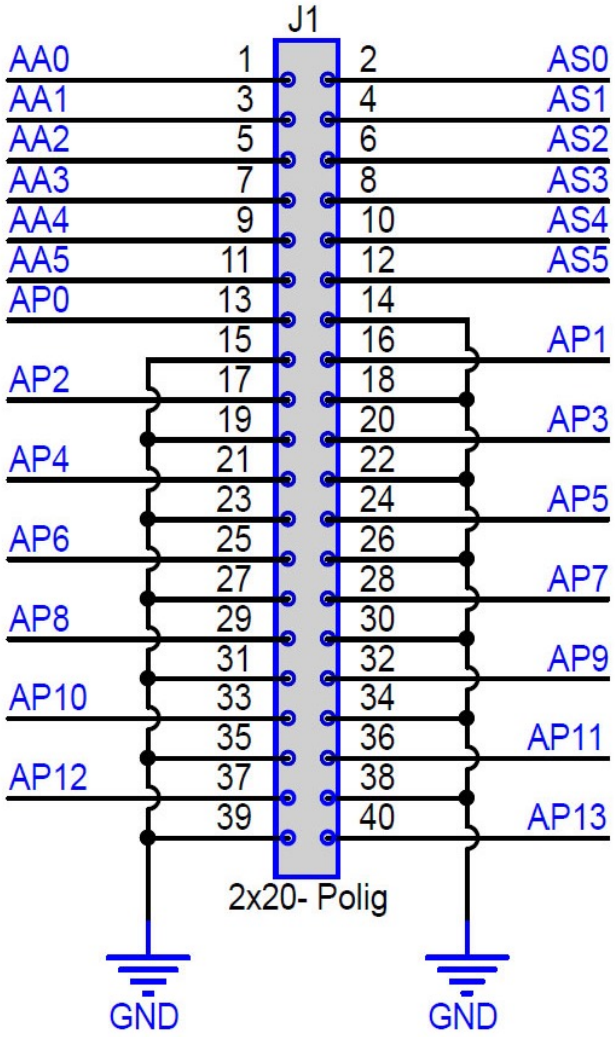

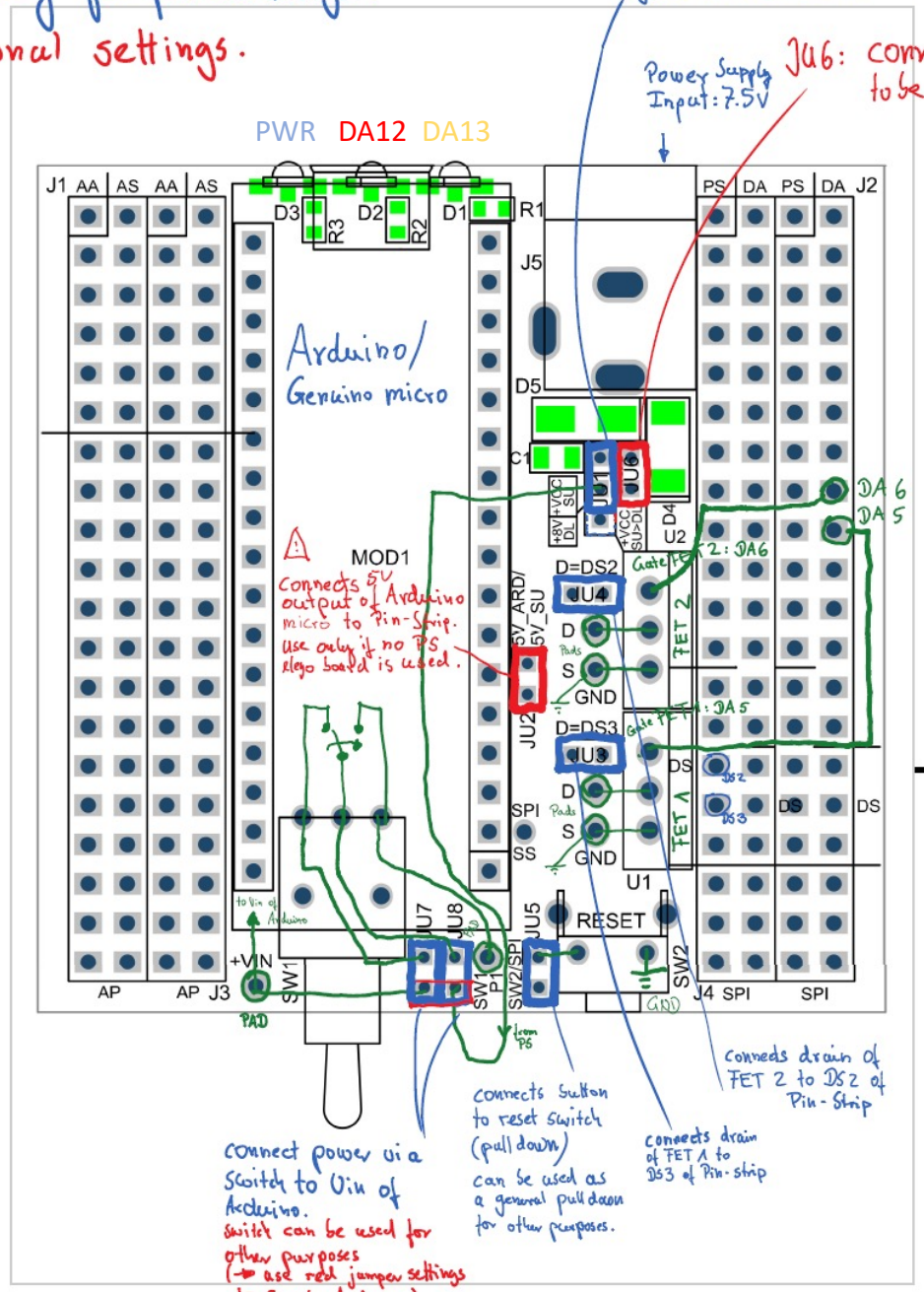

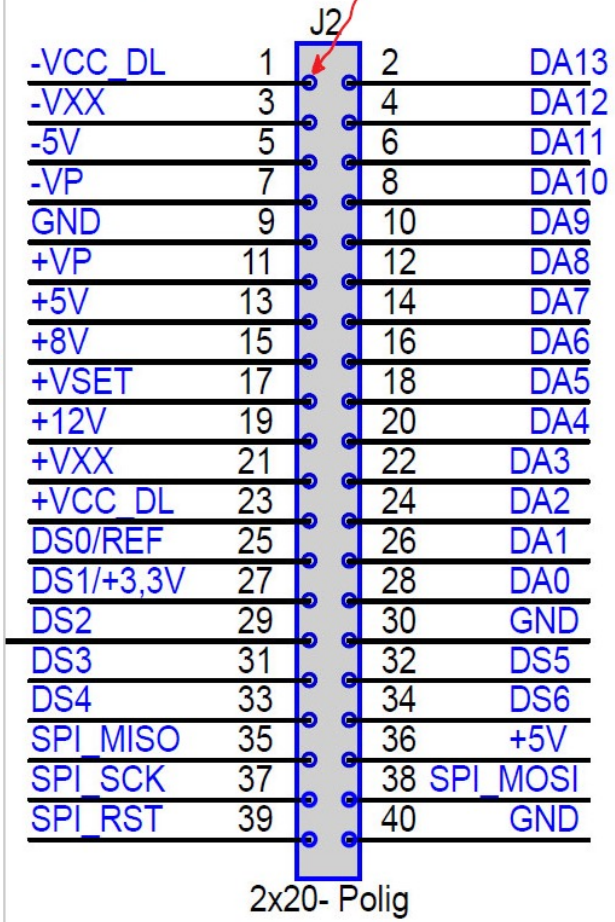

- green: routes on the PCB for information. (Can be ignored)

SU803 Notes production

- Check for the latest production version and check for additional notes on the workshop server
- Add Polarity Protection: Pin 39: Top: Block pin with solder. Bottom: Cut pin
- Set standard jumper settings (blue)
- **For 1/3 of the boards, cut all bottom Pins and add a Boden-case (for the other 2/3, leave the bottom pins uncut)**
- **Before placing the Mosfets U1 and U2 onto the board, please maschine them off at the top and cover them with glue for insulation.** Otherwise they would be too long for placing another e-lego board ontop.
- Put PCBs into Aluminium case. Drawings of the cases can be found here:
  \\pi2\microcontroller\QD-Ultracold\Q-El - e-lego\Cases and Heatsink Needed: **Case LED + Boden**
- Label the finished boxes with the Part-number **SU803**
- Add some notes to the workshop server if there has been some modifications to the previous production version
- If not available yet, make pictures of the produced component an put them on the workshop server
- If not available yet, leave one module in the e-workshop Muster box and label it with „Muster E-Werkstatt“

e-lego module

Ethernet Modul for e-lego – SU 816

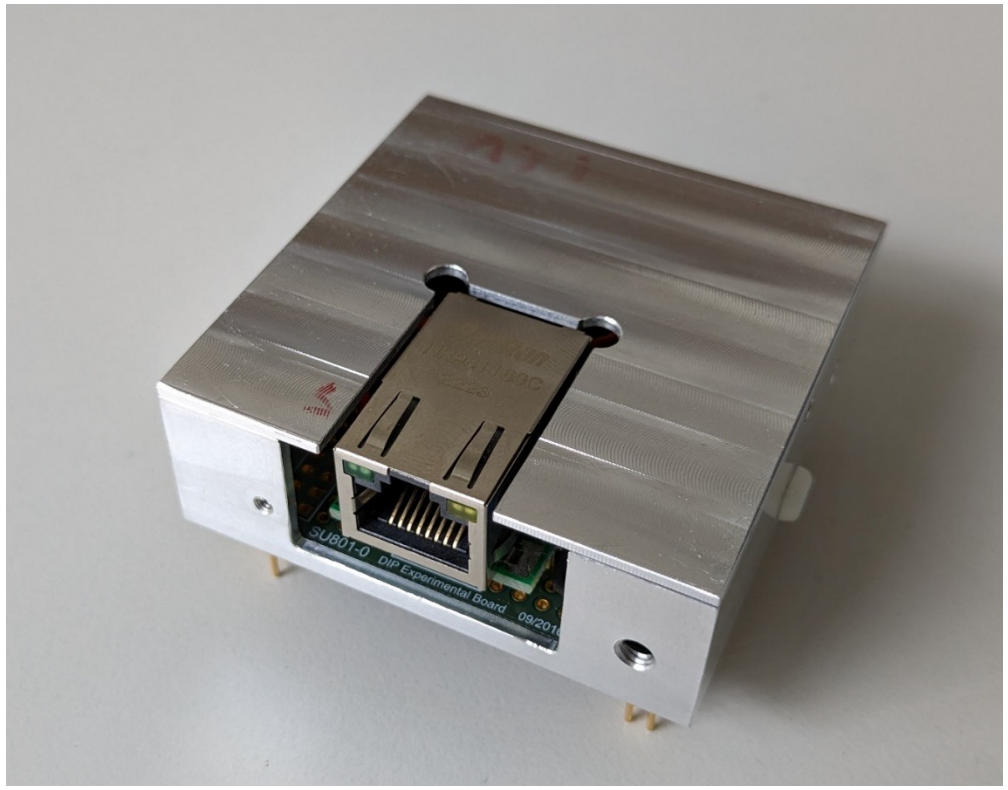

SU816 Jumper Settings

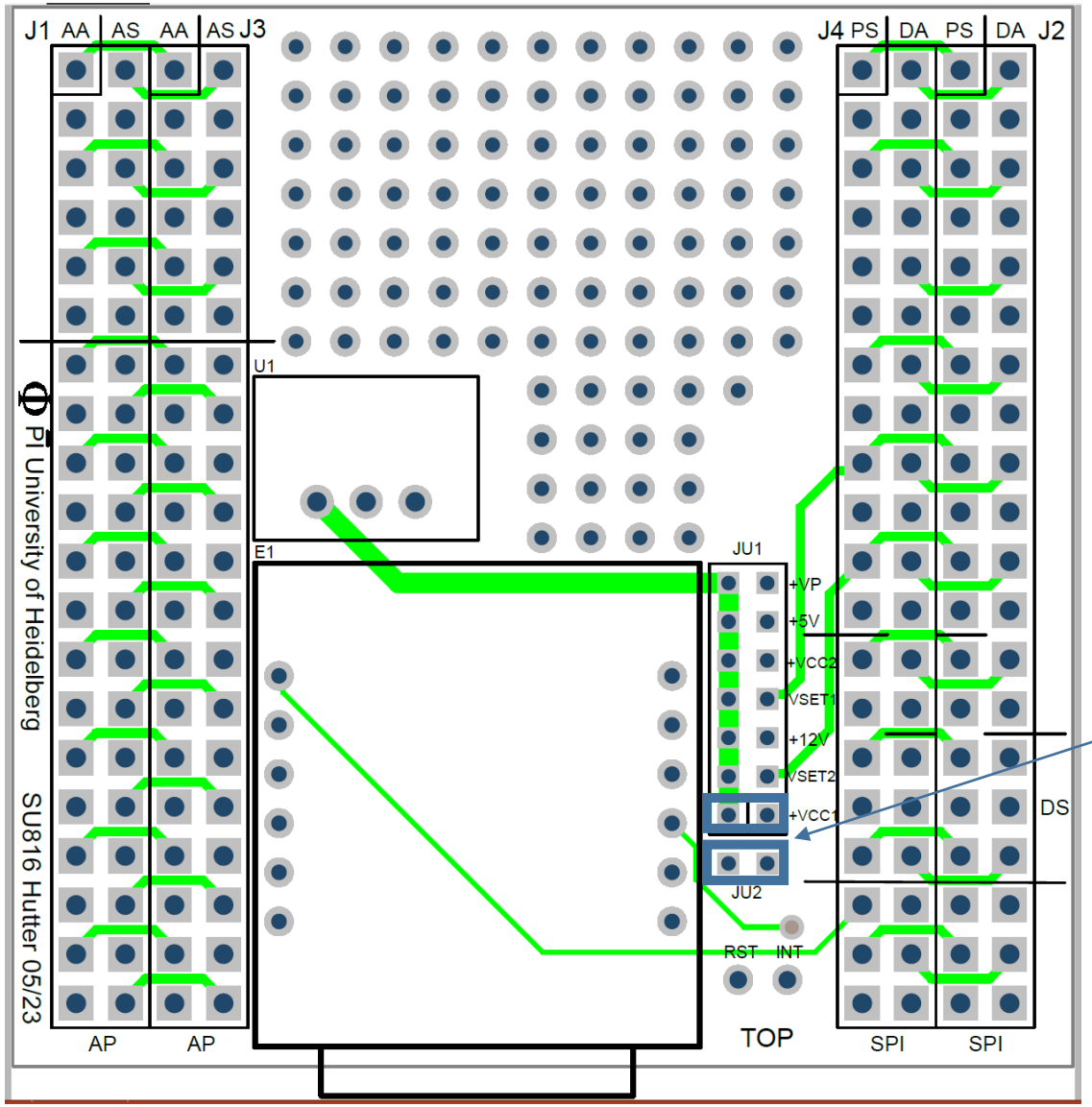

JU1: Connect supply voltage to DC/DC converter

Wurth Elektronik 173950336
Non-Isolated DC/DC Converters FDSM THT 3.3V
0.5A 4.75-36V Input

JU2: Connect DA10 to CS pin of Ethernet Modul

Standard Jumper settings

SU803 Jumper Settings to connect Vin to +VCC1

Standard Jumper Settings SU-803

Donnerstag, 18. Mai 2017 19:08

Blue: factory jumper settings.

JU1: chooses the Power Supply source: 2-3: Power Supply input (standard) 2-1: 8V Supply from additional DZ-800 elego board

Connect + Vin PAD to PIN of JU6

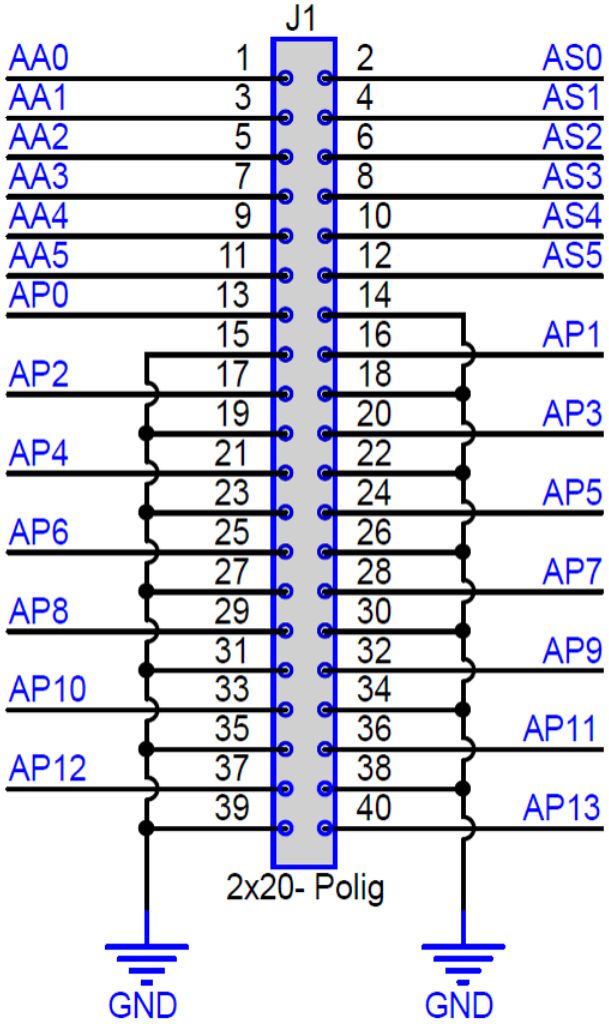

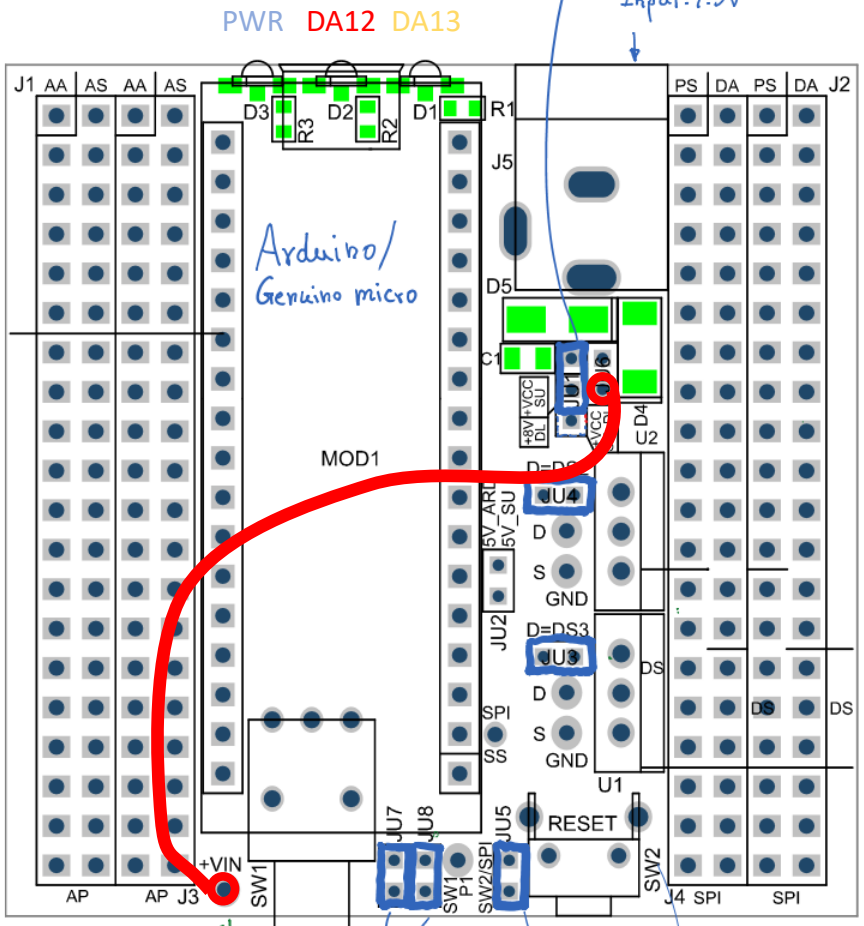

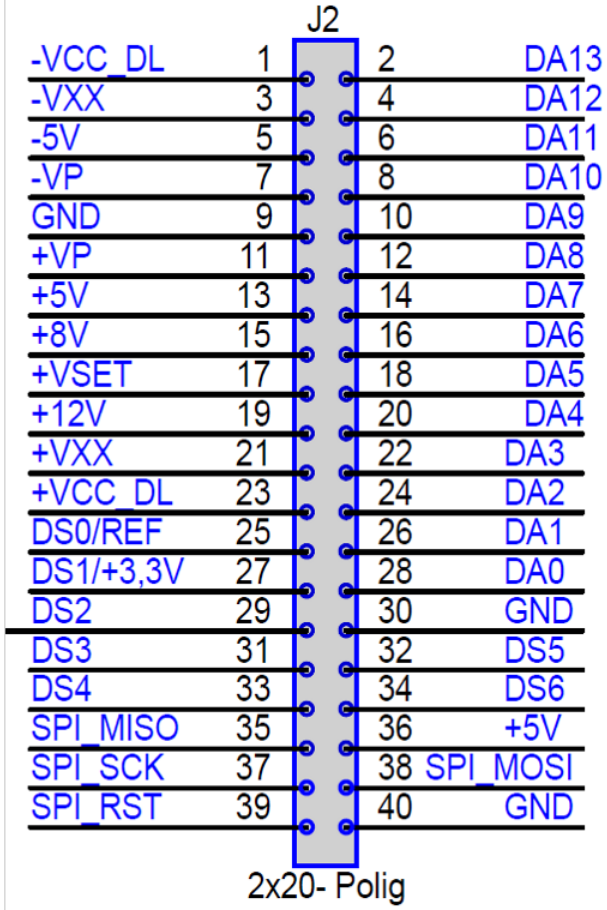

- green: routes on the PCB for information. (Can be ignored)

Ethernet Modul for e-lego – SU 816

Experiment	Module	Hostname	MAC	IP
Rydberg	Q-Ar006 Record Analog Values of MOT Photodiodes	zuern-am1	00:aa:bb:cc:dd:01	10.11.1.152
Rydberg	Q-IL007 Interlock / Data logging Mot-coil temperature	elego-micro-2	00:aa:bb:cc:dd:02	10.11.1.153
~~---~~	~~---~~	~~elego-micro-3~~	~~00:aa:bb:cc:dd:03~~	~~10.11.1.156~~ IP seems to be not registered
Rydberg	Q-Ar009 SmartLab Arduino Prototype Gerhard	elego-micro-4	00:aa:bb:cc:dd:04	10.11.1.157
	to be set	elego-micro-5	00:aa:bb:cc:dd:05	10.11.1.158
	to be set	elego-micro-6	00:aa:bb:cc:dd:06	10.11.1.159

SU816 Notes production

- Check for the latest production version and check for additional notes on the workshop server

- Add Polarity Protection: Pin 39: Top: Block pin with solder. Bottom: Cut pin

- **Set standard jumper settings**

- Put PCBs into Aluminium case. Drawings of the cases can be found here:
  \\pi2\microcontroller\QD-Ultracold\Q-EI - e-lego\Cases and Heatsink Needed: **To be determined**
  „Case PD Ampl. SU800" could be used
- **Add a to lid:**
  \\pi2\microcontroller\QD-Ultracold\Q-EI - e-lego\Cases and Heatsink Needed: **„Deckel" → Cutout to be determined**

- Label the finished boxes with the Part-number SU816

- Add some notes to the workshop server if there has been some modifications to the previous production version

- If not available yet, make pictures of the produced component an put them on the workshop server

Q-Ar006 SmartLab: Record Analog Values of MOT Photodiodes

e-lego unit

SU815: Ethernet Shield → Ethernet: data to smart lab server

SU803 Arduino

4 Photodiodes from MOT Setup → SU802 BNC Connectors - Photodiodes

Trigger from experimental control → SU802 BNC Connectors - Trigger

Set reference voltage of Arduino to 2.5V:
https://arduinogetstarted.com/de/reference/analogreference

Please safe Arduino Code here:

\\147.142.16.140\microcontroller\QD-Ultracold\Q-Ar - Arduino circuits\Q-Ar006 SmartLab-Read Analog Values of MOT Photodiodes

SU816: Ethernet Modul W5500 lite Joy-it for connecting SU803 Microcontroller Arduino Micro (Prototype on SU801 Eval baord)

Note for setting up e-lego Arduino Module SU803: connect +Vin PAD to PIN on JU6 on SU803 to connect Power Supply of SU803 (via switch) with +VCC1

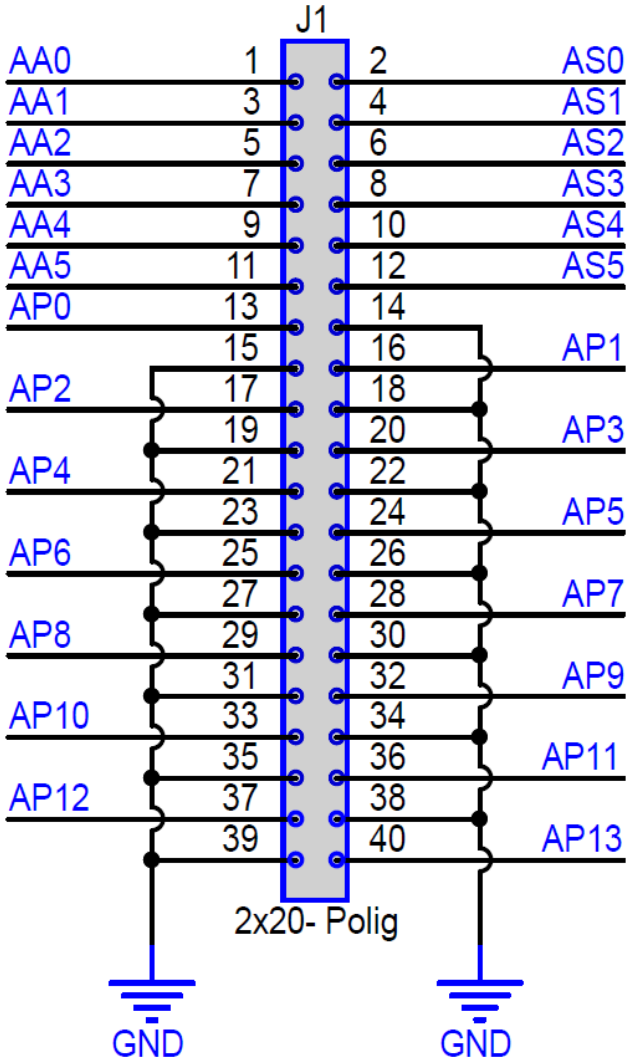

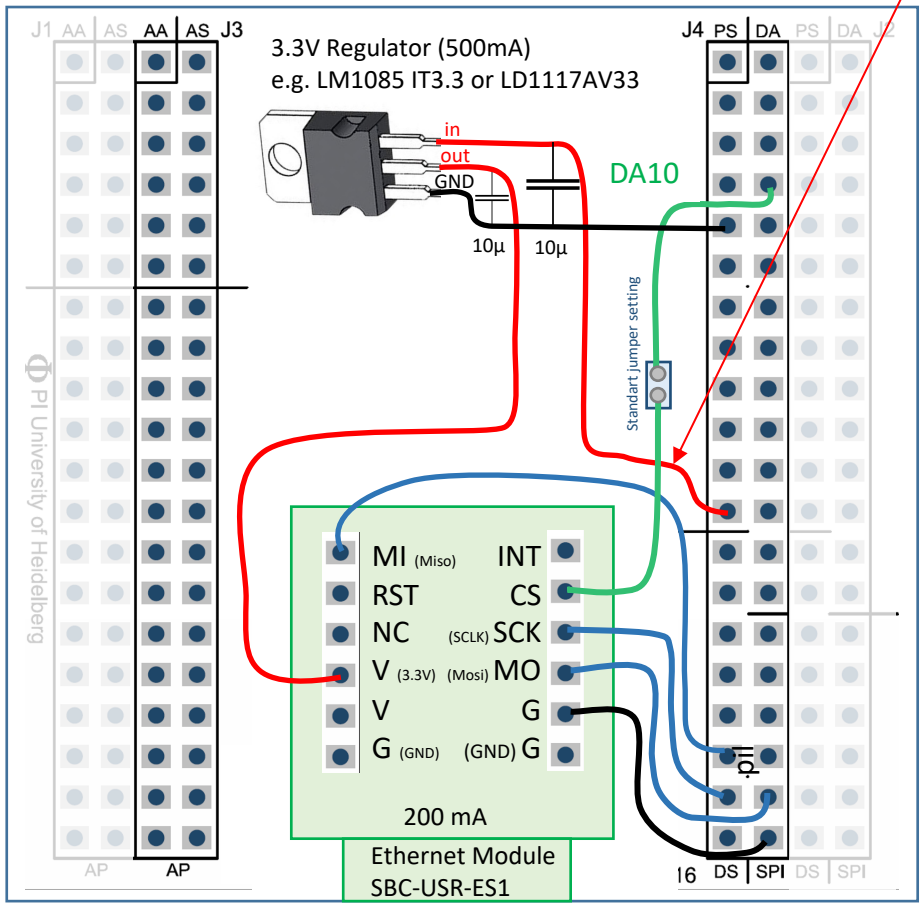

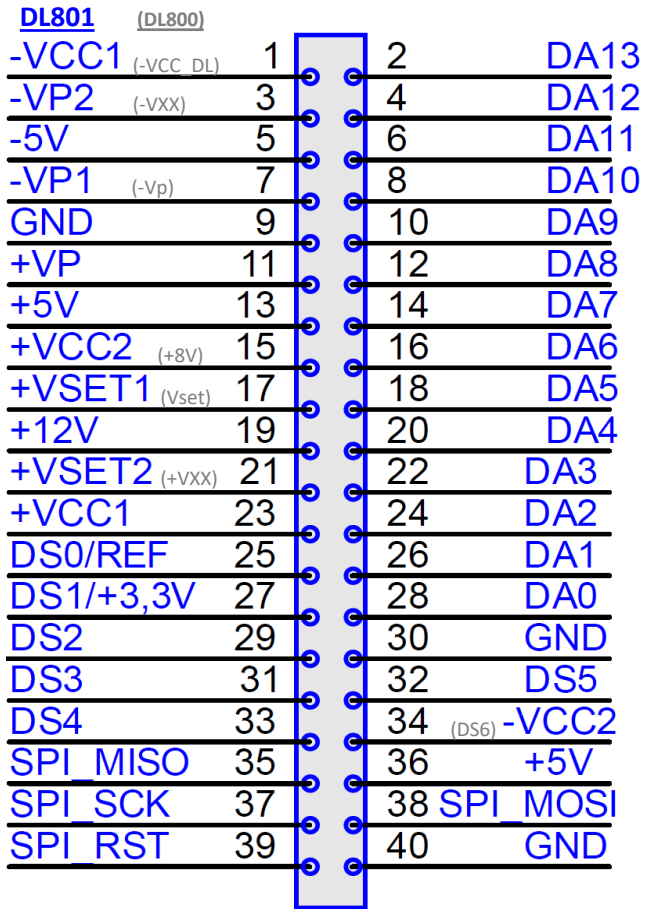

Default Values:

-VCC1:	-7V (-13V/-24V)
-VP2:	-2,7V
-VP1:	-6V
-VCC2:	-13V (-24V)
+VP: =	+VSET1
+VCC2:	+7V
+VSET1:	+6V
+VSET2:	+18V
+VCC1:	+13V (+24V)

https://www.joy-it.net/de/products/SBC-USR-ES1
https://www.ti.com/product/LM1085/part-details/LM1085IT-3.3/NOPB?

SU803 Jumper Settings to connect Vin to +VCC1

Standard Jumper Settings SU-803

Donnerstag, 18. Mai 2017 19:08

Blue: factory jumper settings.

JU1: chooses the Power Supply source: 2-3: Power Supply input (standard) 2-1: 8V Supply from additional DZ-800 elego board

Connect + Vin PAD to PIN of JU6

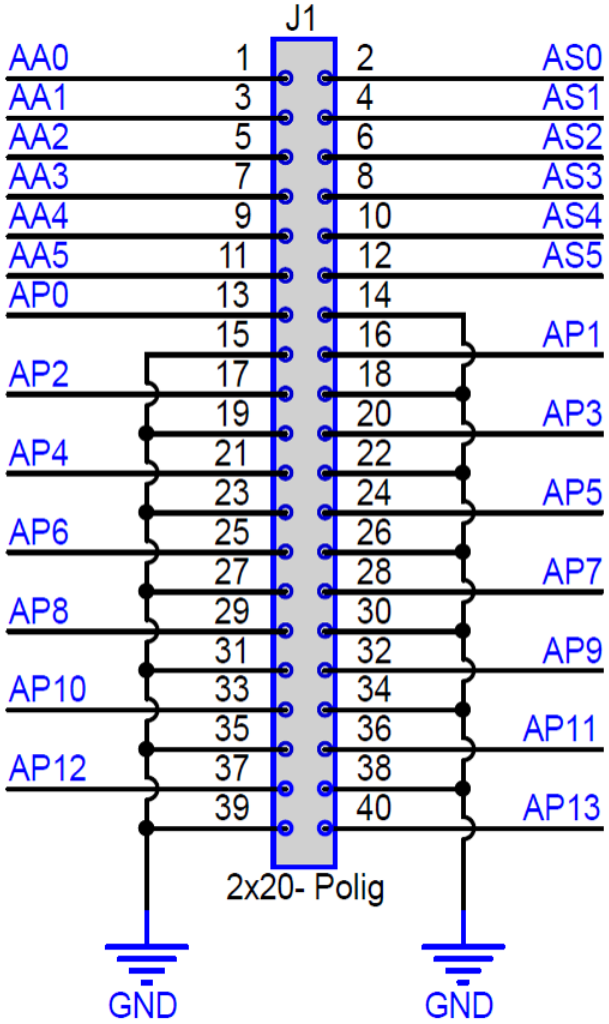

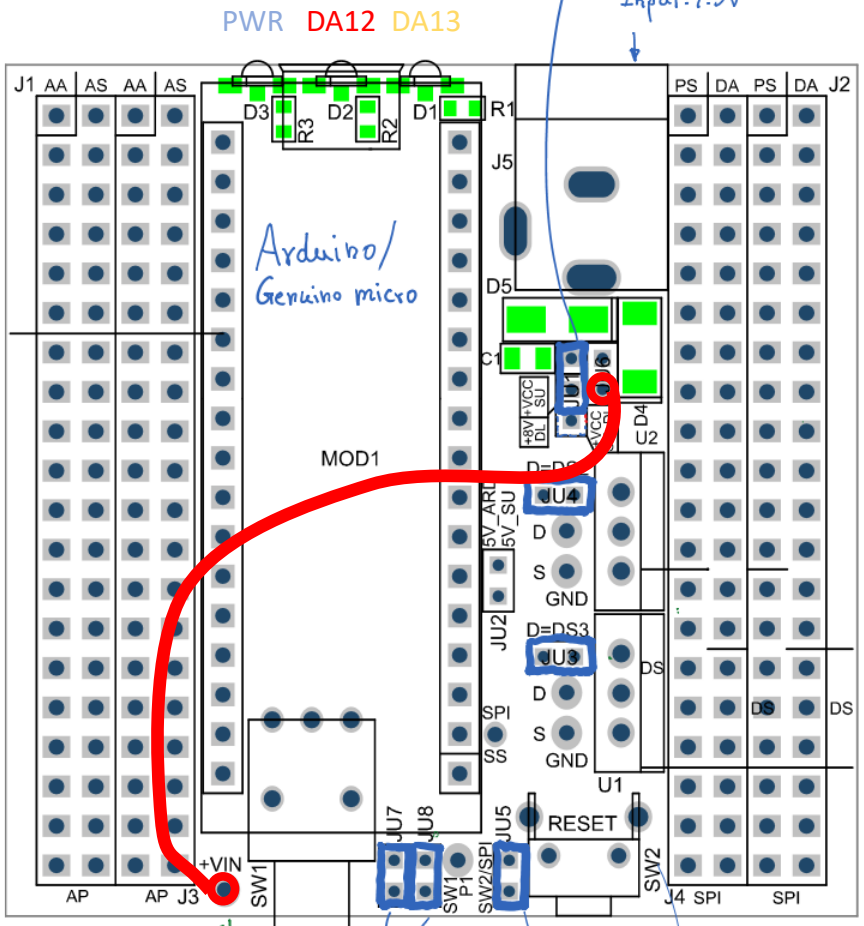

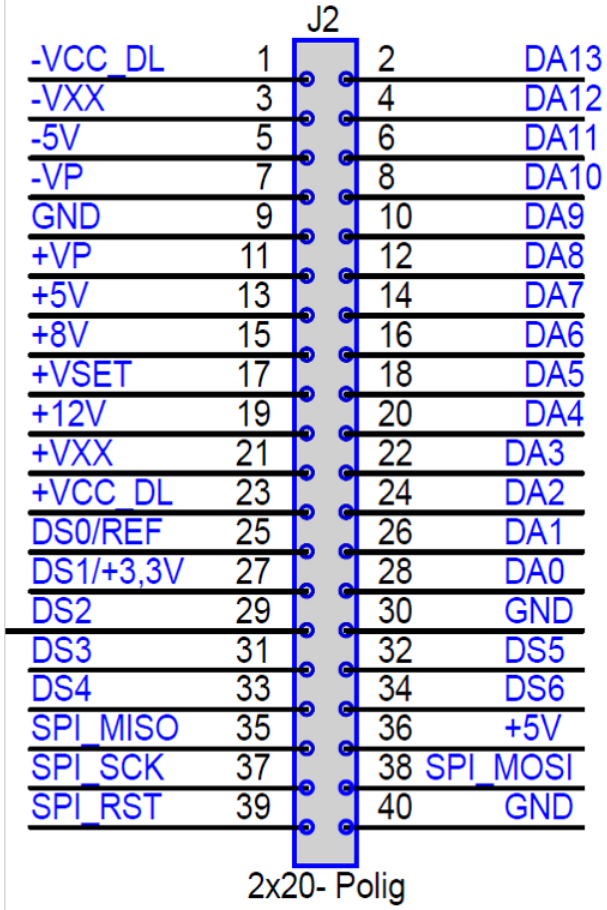

- green: routes on the PCB for information. (Can be ignored)

BNC Connector Board
SU 802 for 4 Analog Inputs

Blue: Standard jumper settings

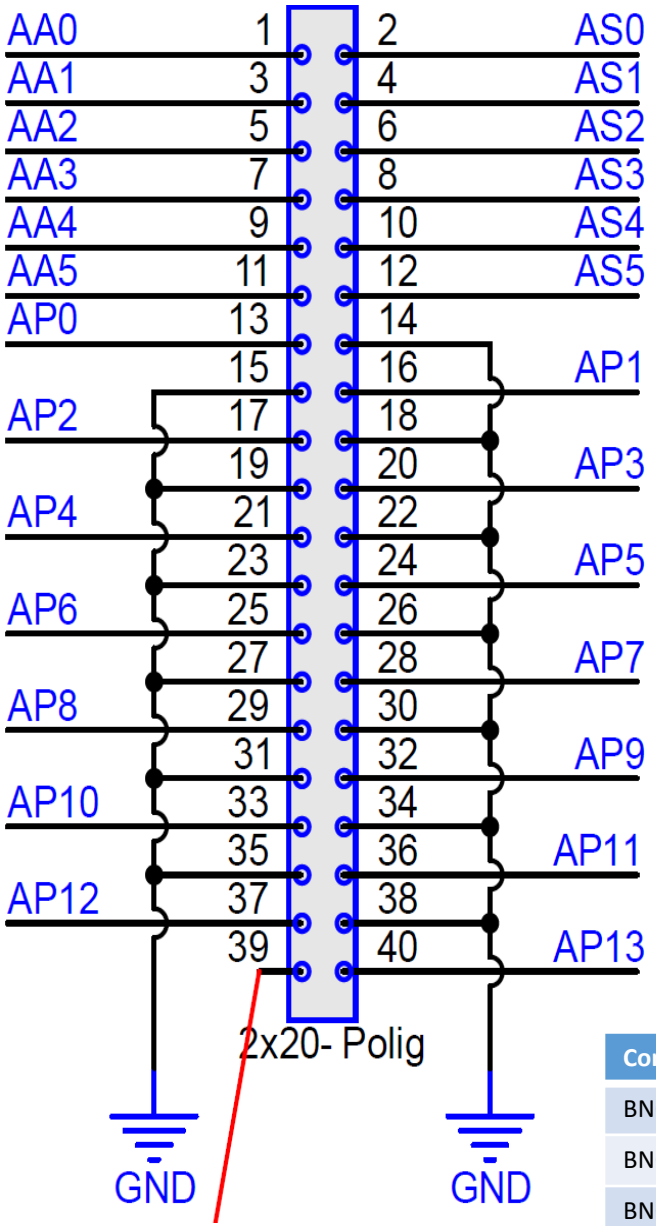

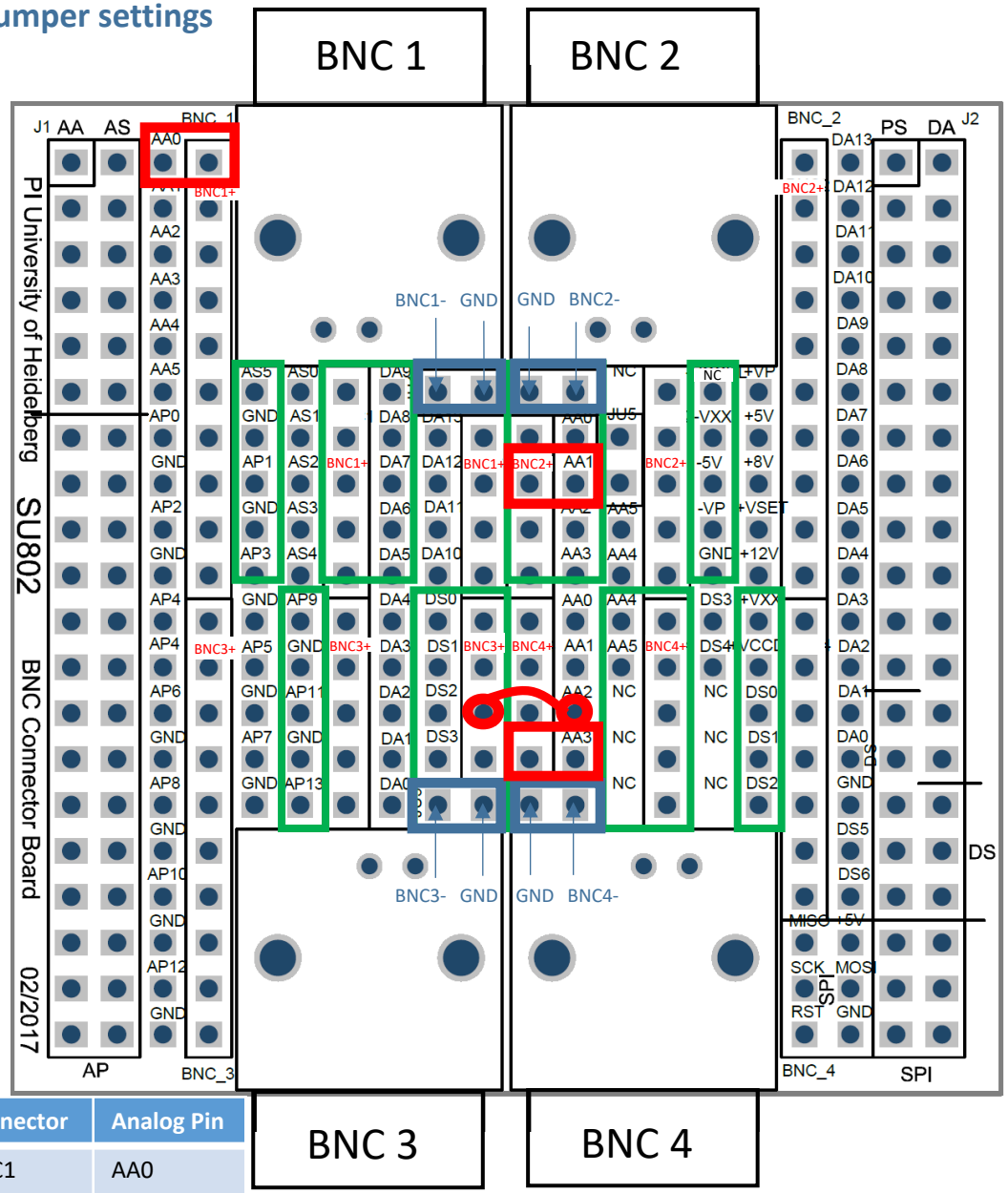

Connector	Analog Pin
BNC1	AA0
BNC2	AA1
BNC3	AA2
BNC4	AA3

DL801 (DL800)

-VCC1	(-VCC_DL)	1	2	DA13
-VP2	(-VXX)	3	4	DA12
-5V		5	6	DA11
-VP1	(-Vp)	7	8	DA10
GND		9	10	DA9
+VP		11	12	DA8
+5V		13	14	DA7
+VCC2	(+8V)	15	16	DA6
+VSET1	(Vset)	17	18	DA5
+12V		19	20	DA4
+VSET2	(+VXX)	21	22	DA3
+VCC1		23	24	DA2
DS0/REF		25	26	DA1
DS1/+3,3V		27	28	DA0
DS2		29	30	GND
DS3		31	32	DS5
DS4		33	34	(DS6) -VCC2
SPI_MISO		35	36	+5V
SPI_SCK		37	38	SPI_MOSI
SPI_RST		39	40	GND

Default Values:

-VCC1:	-7V (-13V/-24V)
-VP2:	-2,7V
-VP1:	-6V
-VCC2:	-13V (-24V)
+VP: =	+VSET1
+VCC2:	+7V
+VSET1:	+6V
+VSET2:	+18V
+VCC1:	+13V (+24V)

BNC Connector Board
SU 802 Recording trigger

Blue: Standard jumper settings

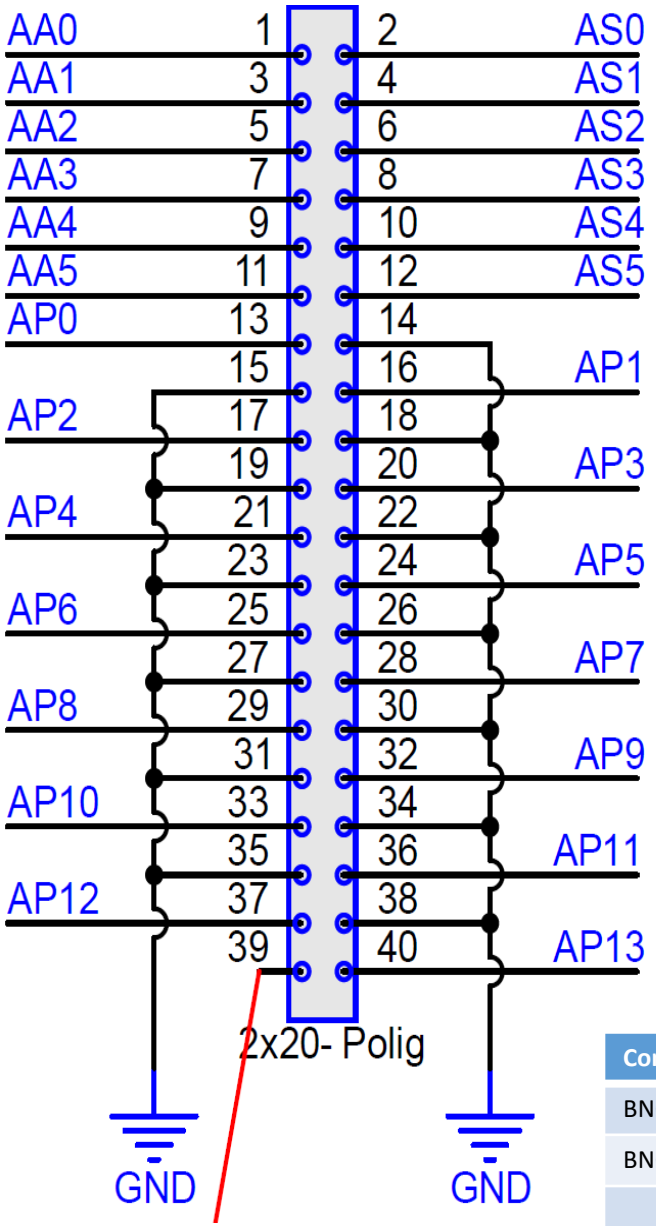

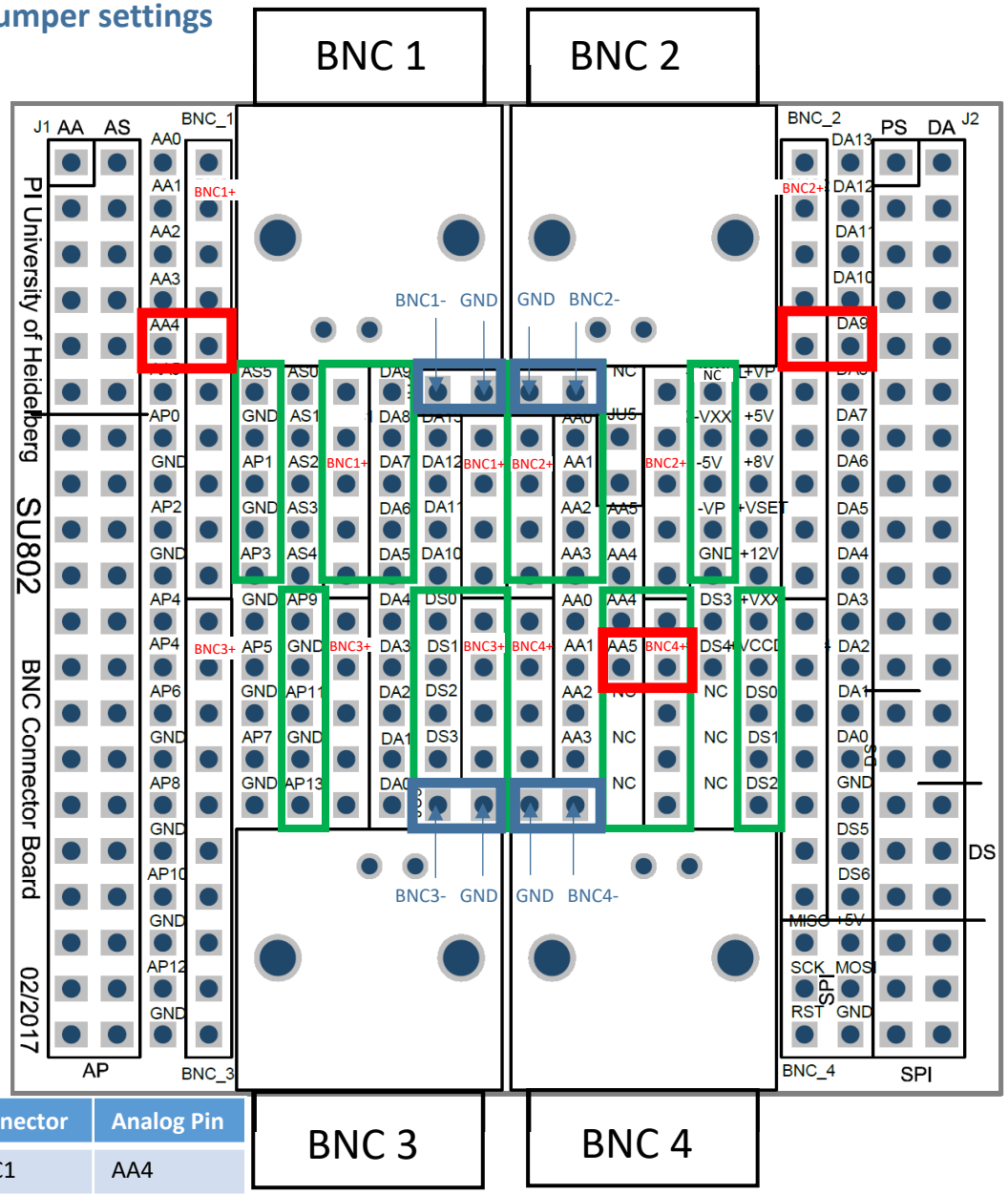

Connector	Analog Pin
BNC1	AA4
BNC2	DA9
BNC4	AA5

DL801 (DL800)

-VCC1 (-VCC_DL)	1	2	DA13
-VP2 (-VXX)	3	4	DA12
-5V	5	6	DA11
-VP1 (-Vp)	7	8	DA10
GND	9	10	DA9
+VP	11	12	DA8
+5V	13	14	DA7
+VCC2 (+8V)	15	16	DA6
+VSET1 (Vset)	17	18	DA5
+12V	19	20	DA4
+VSET2 (+VXX)	21	22	DA3
+VCC1	23	24	DA2
DS0/REF	25	26	DA1
DS1/+3,3V	27	28	DA0
DS2	29	30	GND
DS3	31	32	DS5
DS4	33	34 (DS6)	-VCC2
SPI_MISO	35	36	+5V
SPI_SCK	37	38	SPI_MOSI
SPI_RST	39	40	GND

Default Values:

-VCC1:	-7V (-13V/-24V)
-VP2:	-2,7V
-VP1:	-6V
-VCC2:	-13V (-24V)
+VP: =	+VSET1
+VCC2:	+7V
+VSET1:	+6V
+VSET2:	+18V
+VCC1:	+13V (+24V)

Waterflow interlock – Q-Ar004

e-lego unit

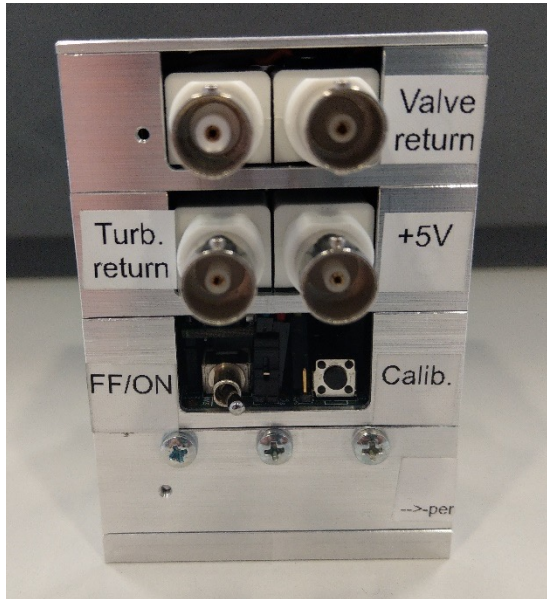

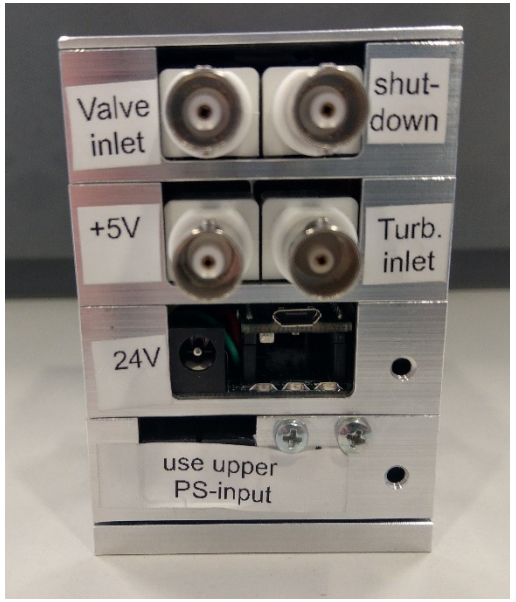

Recommended supplies:

Pos: 24V with modifications as shown on the next pages
DL 800 Overvoltage protection set to 26V

Arduino code:
\pi2\microcontroller\QD-Ultracold\Q-Ar - Arduino circuits\Q-Ar004 Water flow interlock based on e-lego

Waterflow Interlock based on

SU803 Arduino Board

Boards needed:
(top to bottom)

- 2 x SU802 Connector board
- 1 x SU803 Arduino Board with 24V PS
- 1 x DL 800 Power Supply board without PS

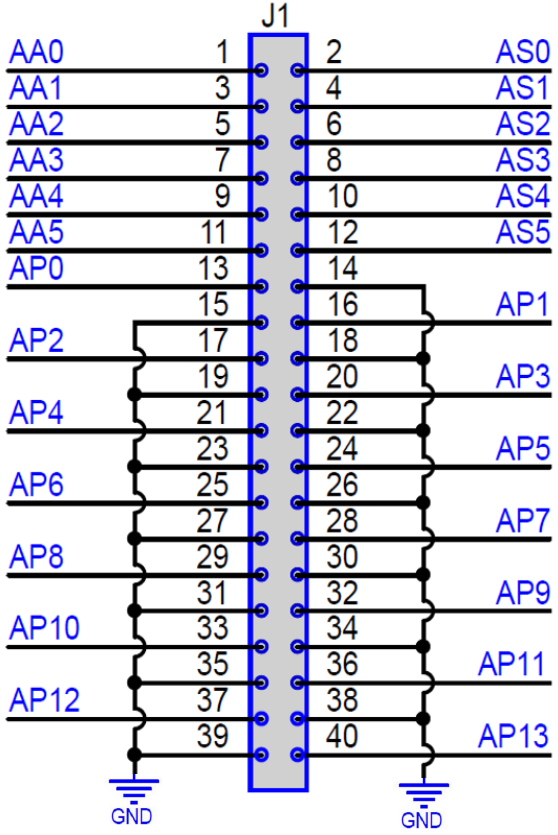

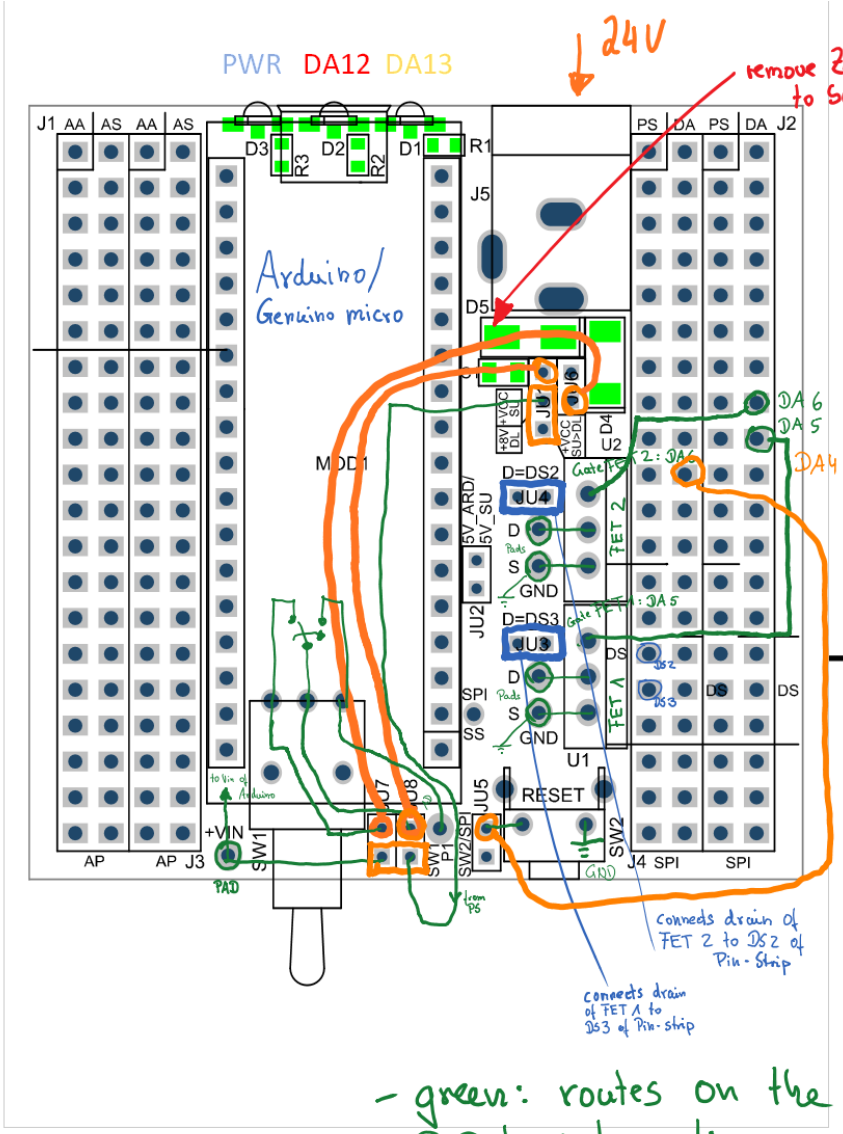

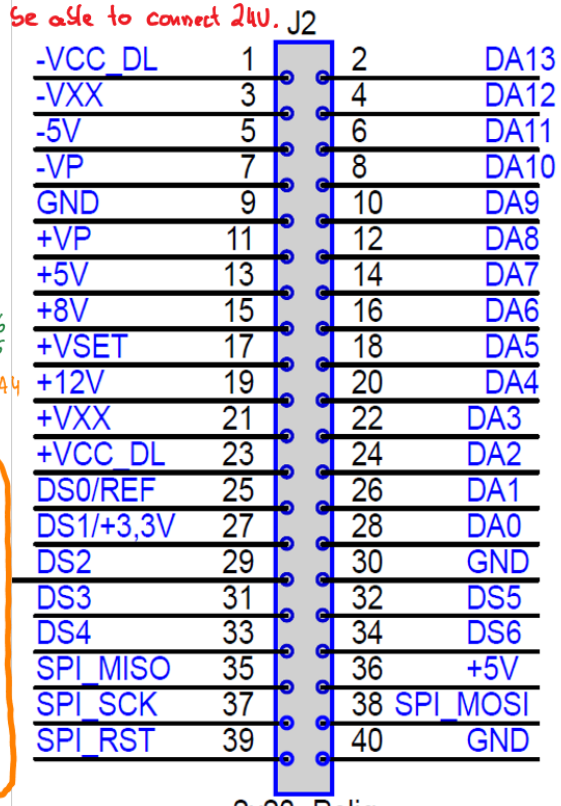

- green: routes on the PCB for information. (Can be ignored)

- orange: Jumper and jumper wire specific to Waterflow interlock

blue: factory jumper settings

Digital IO Pin configuration

Port	Arduino PIN (DA)	Comment
Valve inlet	D5 (output)	Fet1– DS 3
Valve return	D6 (output)	Fet2 – DS 2
Turbine inlet	D7 (input_pullup)	
Turbine return	D2 (input_pullup)	
Red LED	D12 (output)	
Green LED	D13 (output)	
Calibration Button	D4 (input – pullup)	
Shutdown	D8	

Waterflow Interlock based on SU803 Arduino Board

Boards needed:
(top to bottom)

- 2 x SU802 Connector board
- 1 x SU803 Arduino Board with 24V PS
- 1 x DL 800 Power Supply board without PS

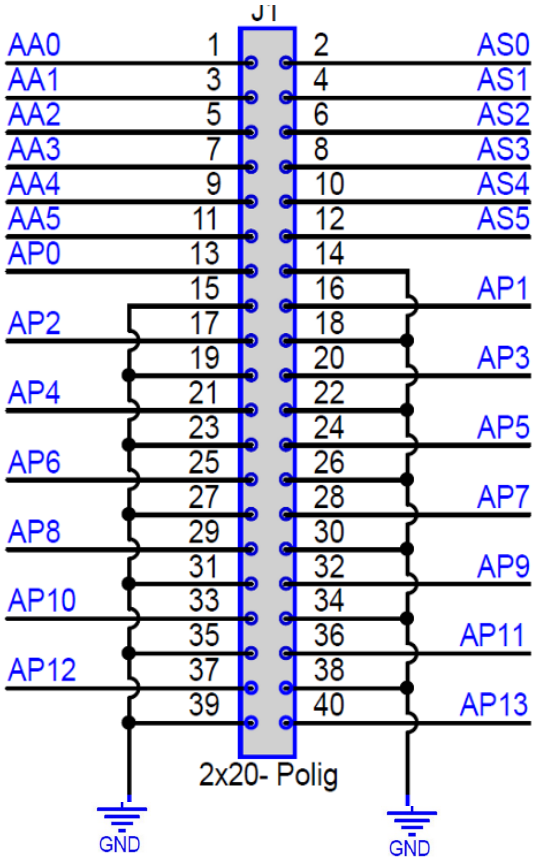

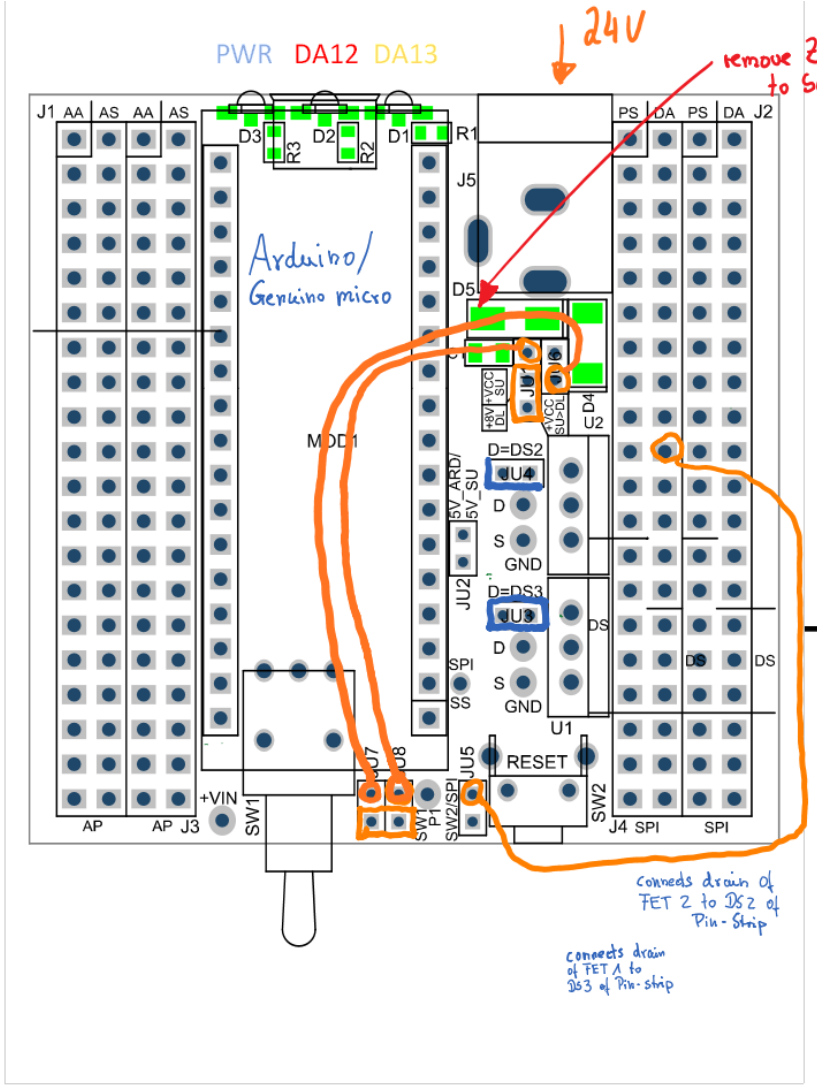

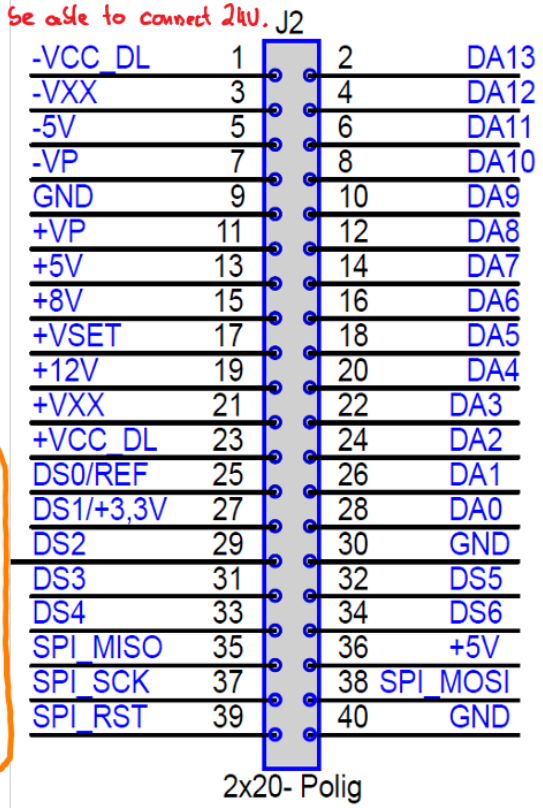

- orange: Jumper and jumper wire specific to Waterflow interlock

Blue: factory jumper settings

Digital IO Pin configuration

Port	Arduino PIN (DA)	Comment
Valve inlet	D5 (output)	Fet1– DS 3
Valve return	D6 (output)	Fet2 – DS 2
Turbine inlet	D7 (input_pullup)	
Turbine return	D2 (input_pullup)	
Red LED	D12 (output)	
Green LED	D13 (output)	
Calibration Button	D4 (input – pullup)	
Shutdown	D8	

Connector (SU802) for Waterflow interlock

Blue: factory jumper settings

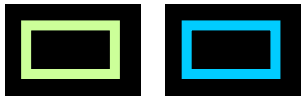

jumper

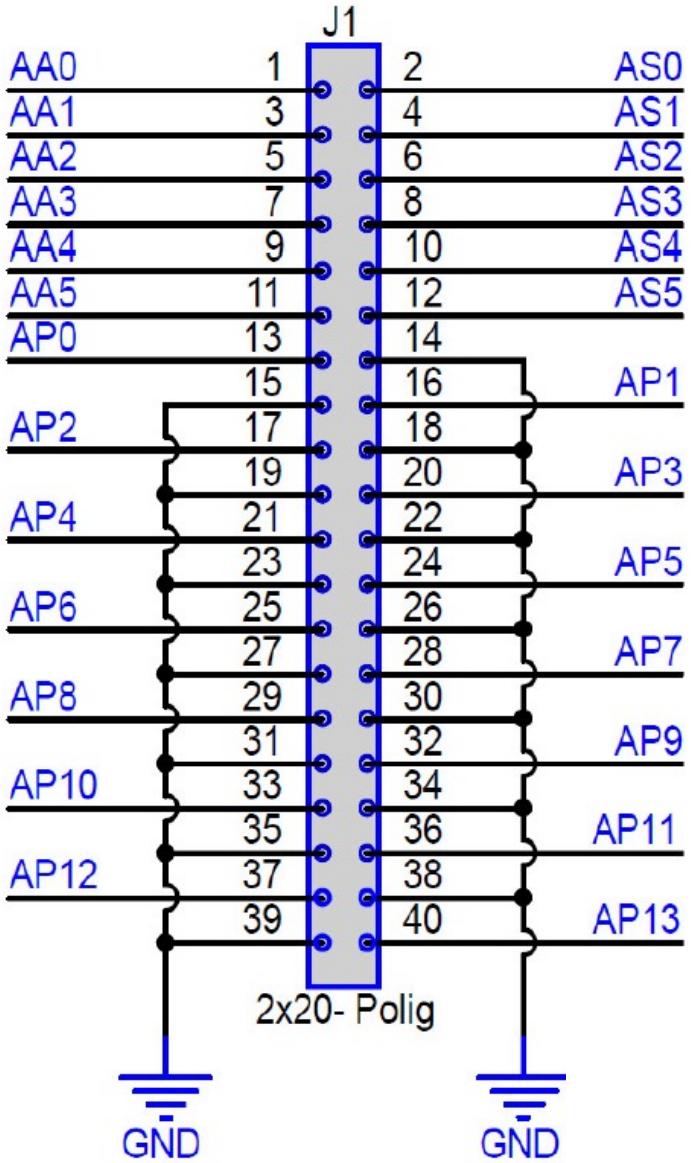

Turbine inlet DA7

Turbine inlet +5V

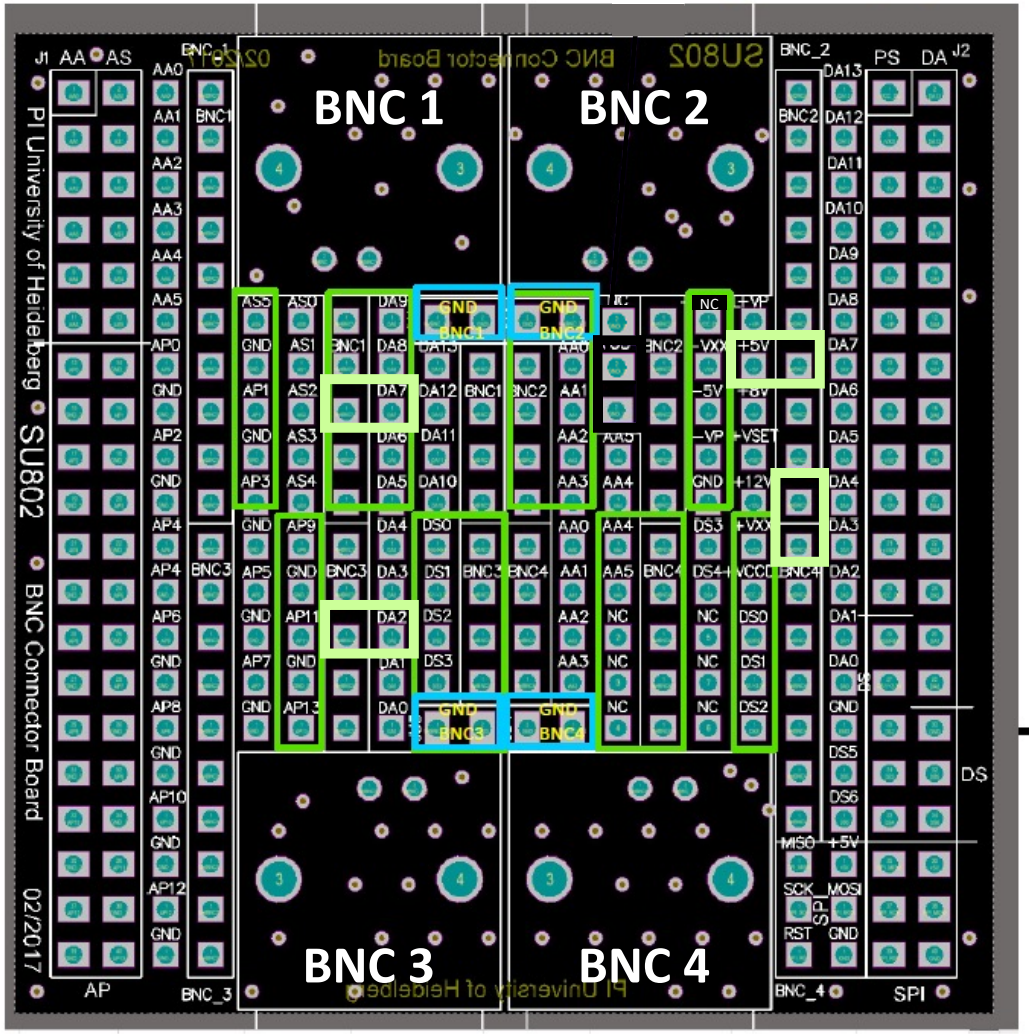

DA4 Turbine return

+5V Turbine return

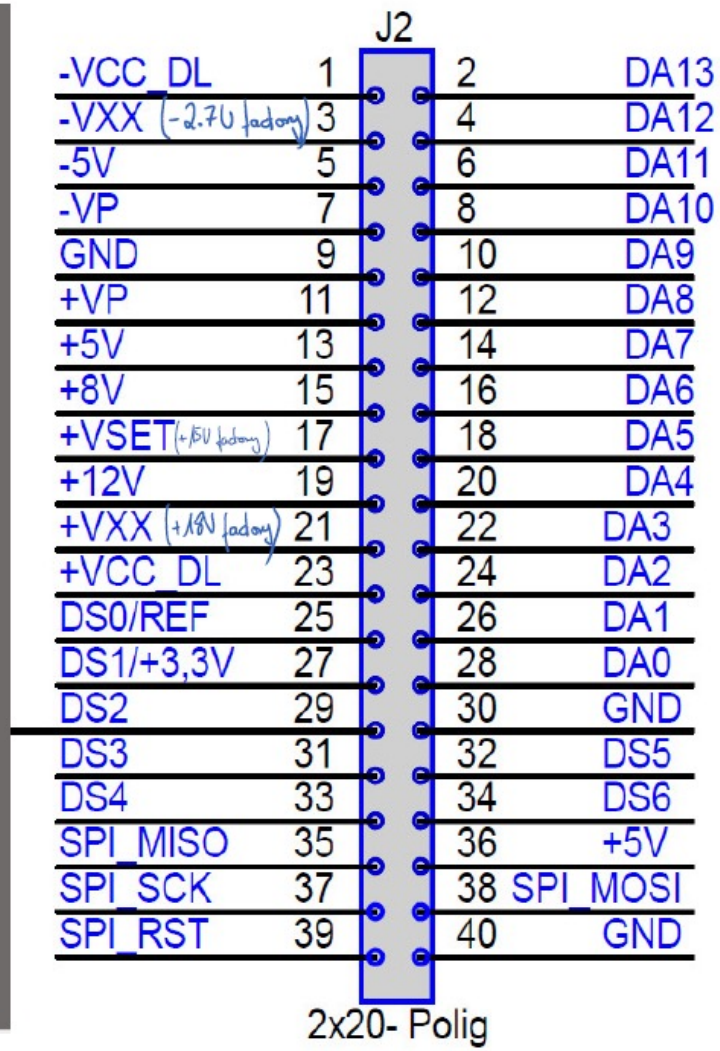

Connector (SU802) for Waterflow Interlock

Jumper and Jumperwire

Shutdown
DA8

Valve inlet
DA5 – Fet1 – DS3

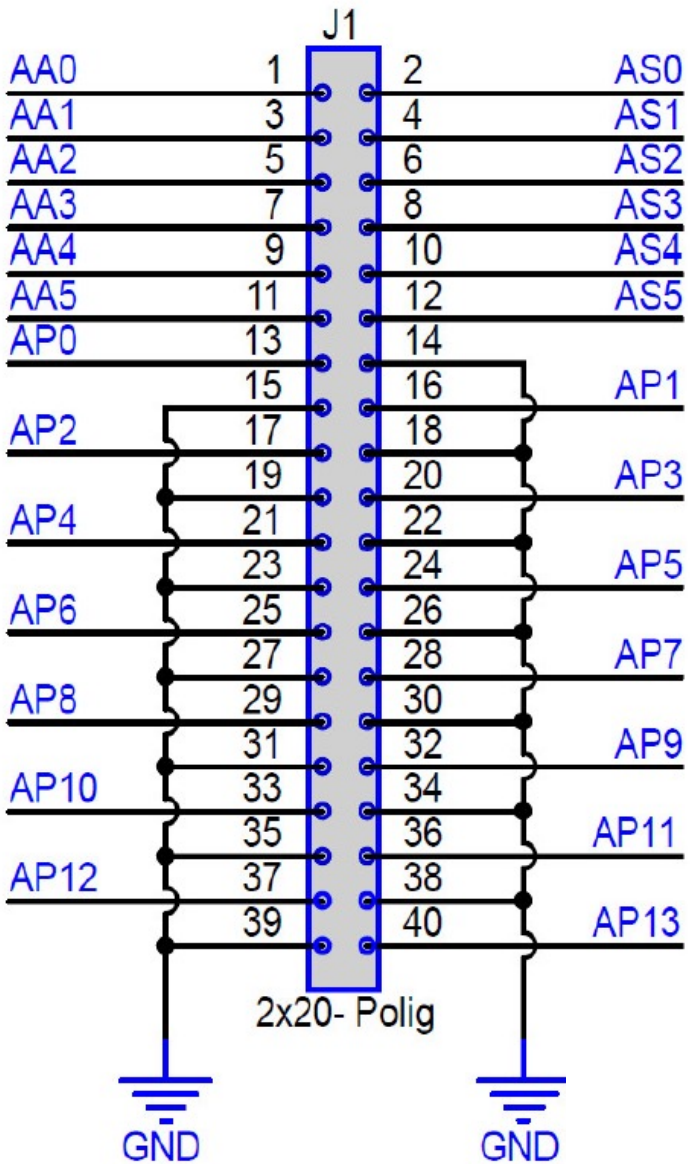

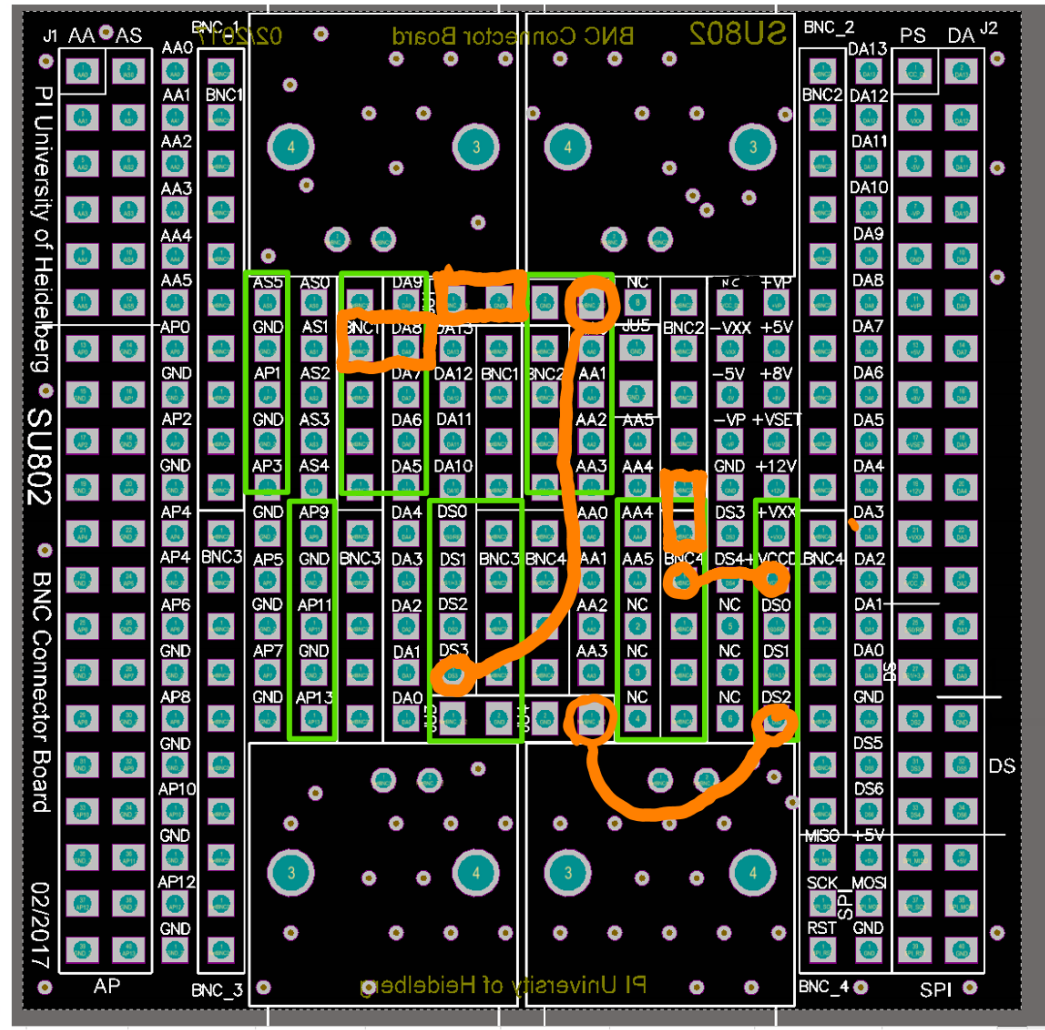

DA6 -- Fet2 – DS2
Valve return

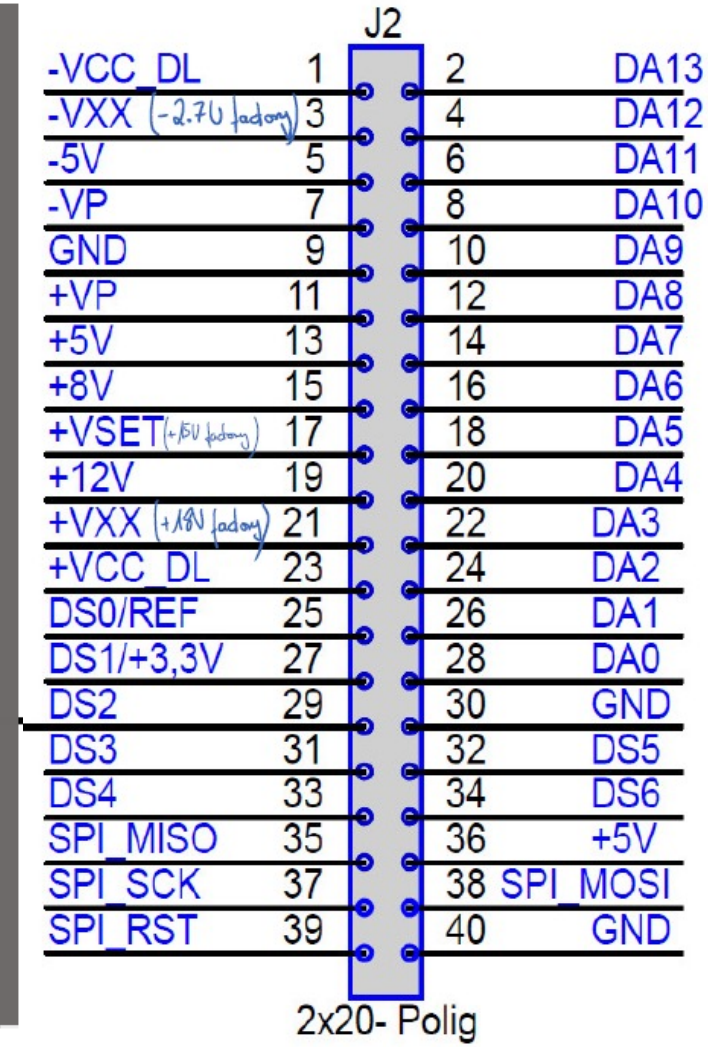

Q-IL008 Fiber Interlock Dysprosium lab

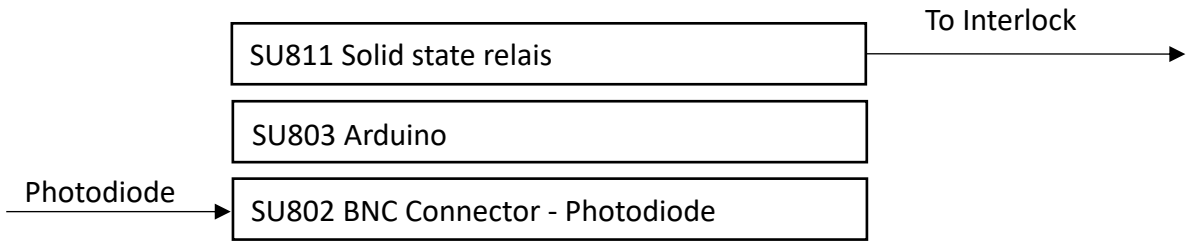

e-lego unit

Standard Jumper Settings SU-803

Donnerstag, 18. Mai 2017 19:08

Blue: factory jumper settings.

JU1: chooses the Power Supply source: 2-3: Power Supply input (standard) 2-1: 8V Supply from additional D2-800 elego board

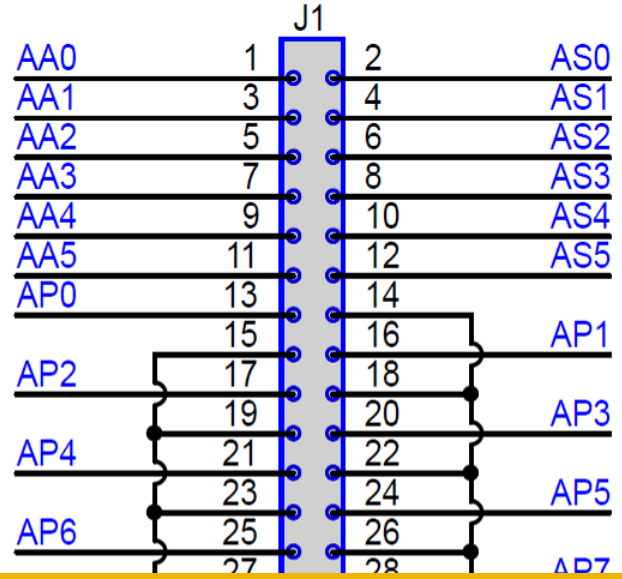

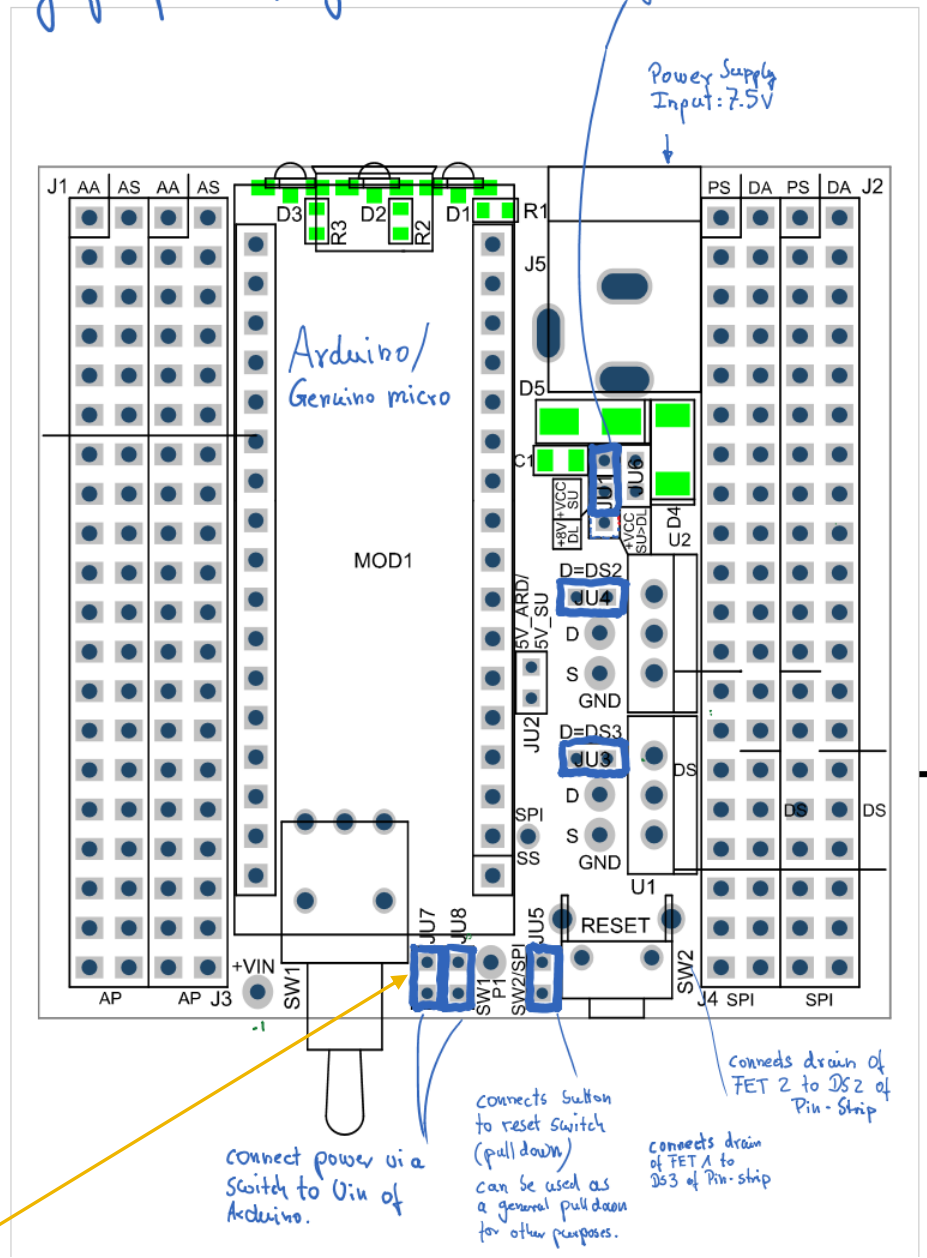

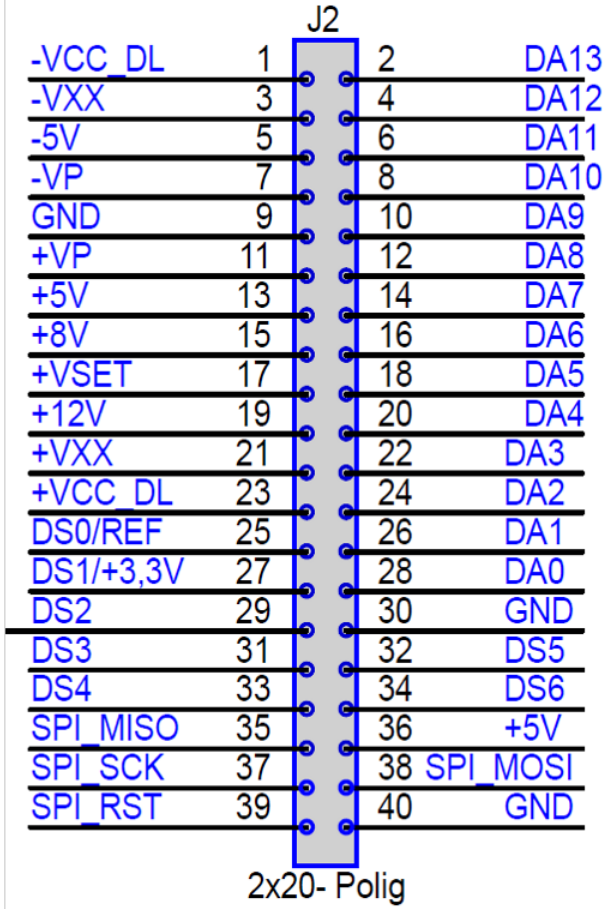

One can reconfigure the switch to use it to control the status of the microcontroller

- **Connect the power directly to the arduino not via the switch**
- **Connect one pin of the switch to GND**
- **Connect the other pin of the switch to a Digital input that is internally pulled high. If the switch is activated the Digital pin is pulled down and you can set the solid state ralais on bypass (laser always on)**

Connect AA0 with BNC1 with jumper

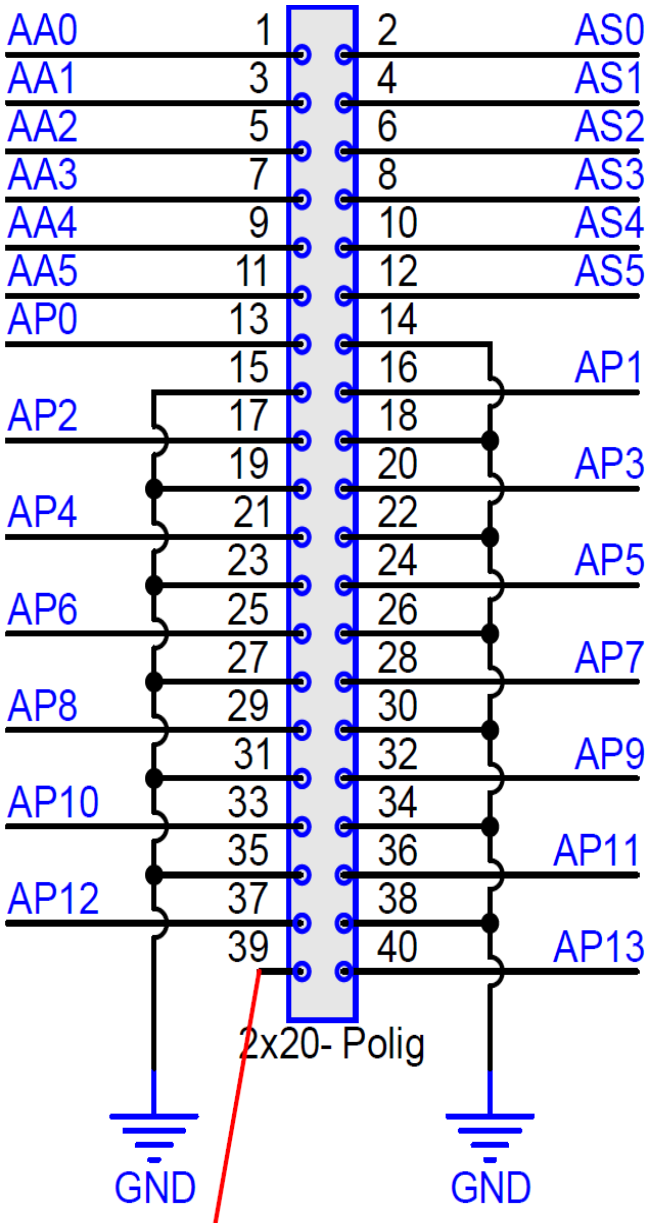

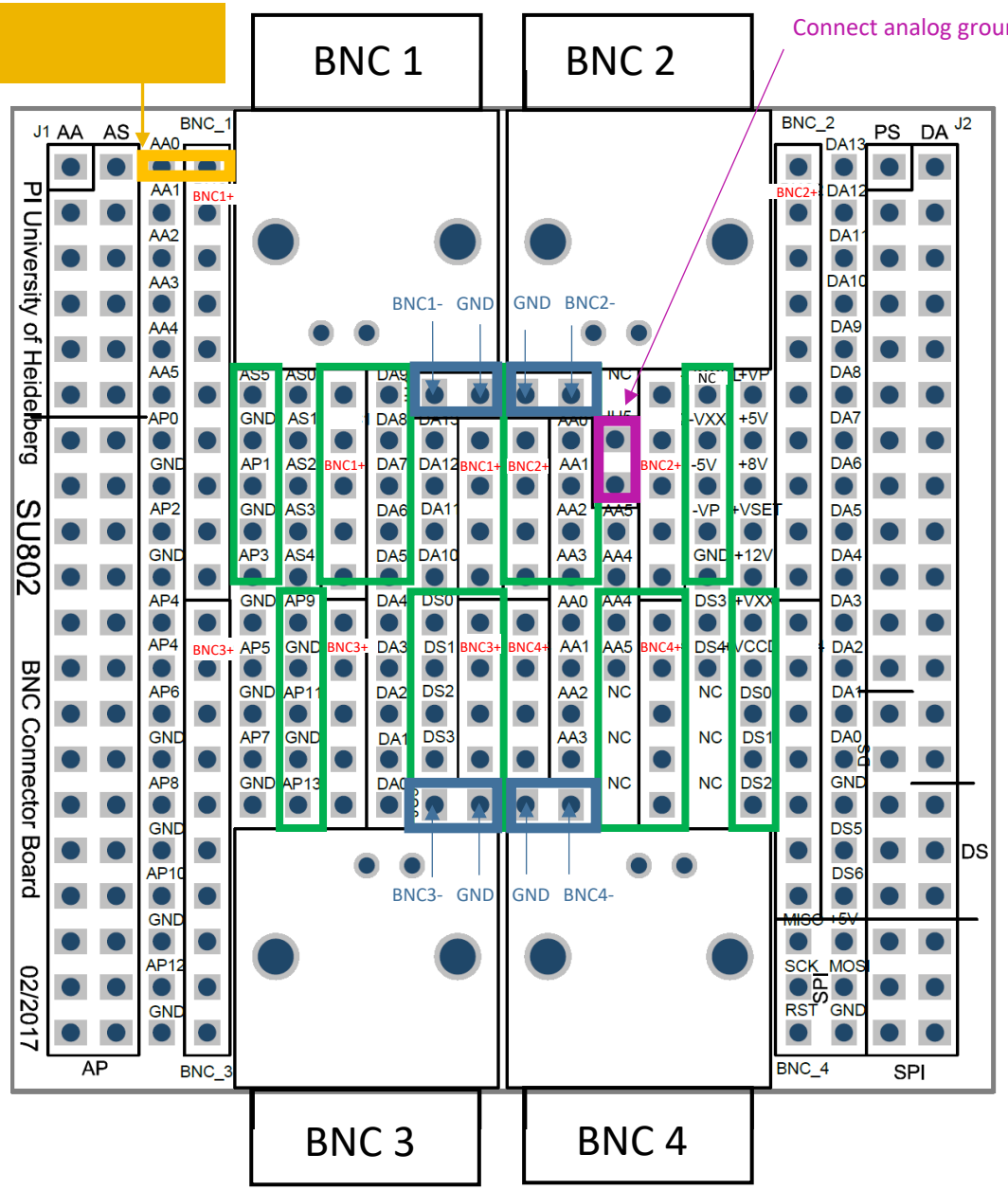

Connect Photodiode to BNC1. Read the analog 0 input channel of the Arduino (AA0)

DL801 (DL800)

-VCC1 (-VCC_DL)	1	2		DA13
-VP2 (-VXX)	3	4		DA12
-5V	5	6		DA11
-VP1 (-Vp)	7	8		DA10
GND	9	10		DA9
+VP	11	12		DA8
+5V	13	14		DA7
+VCC2 (+8V)	15	16		DA6
+VSET1 (Vset)	17	18		DA5
+12V	19	20		DA4
+VSET2 (+VXX)	21	22		DA3
+VCC1	23	24		DA2
DS0/REF	25	26		DA1
DS1/+3,3V	27	28		DA0
DS2	29	30		GND
DS3	31	32		DS5
DS4	33	34	(DS6)	-VCC2
SPI_MISO	35	36		+5V
SPI_SCK	37	38		SPI_MOSI
SPI_RST	39	40		GND

Default Values:

-VCC1:	-7V (-13V/-24V)
-VP2:	-2,7V
-VP1:	-6V
-VCC2:	-13V (-24V)
+VP: =	+VSET1
+VCC2:	+7V
+VSET1:	+6V
+VSET2:	+18V
+VCC1:	+13V (+24V)

SU811 Solid state relais - schematic

Standard Jumper, In 1 – Out 1 Normally open (LBA716)

Connect DA 7 from the Arduino to input 1 of the solid state relais

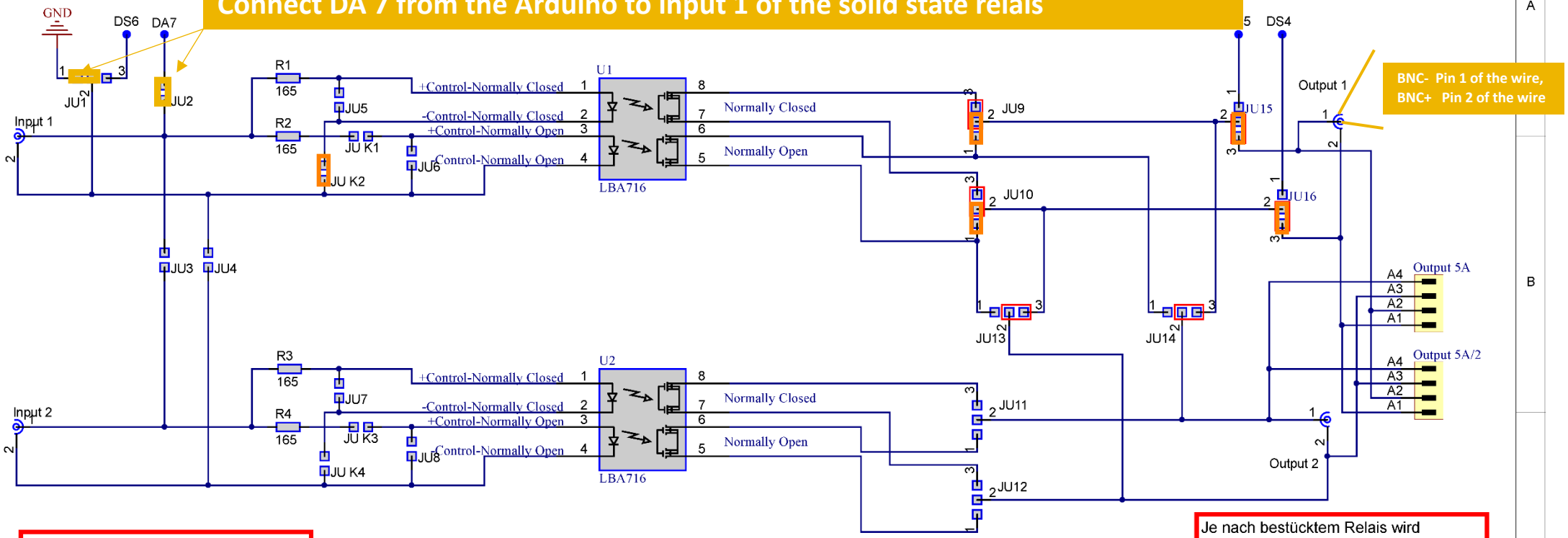

BNC- Pin 1 of the wire, BNC+ Pin 2 of the wire

Die Vorwiderstände R1-R4 wurden auf 165Ohm dimesioniert damit man den G3VM-1CR1, den LAA710 und den LBA716 ohne Probleme nutzen kann und die Relais gewechselt werden können ohne den Vorwiderstand auch zu wechseln.
Jedoch bei längerer Benutzung eines Relais wird empfohlen den Vorwiderstand auf das Relais anzupassen, damit das Relais nicht zu stark belastet wird.
LAA710 = 165Ohm
LBA716 = 900Ohm
G3VM-1CR1 = 272Ohm

Use the digital channel DA 7 on the Arduino to control the solid state relais which connects/disconnects the interlock wire of the IPG laser

Je nach bestücktem Relais wird zwischen den BNC Buchsen (Output1,Output2) oder der Printklemme Output5A gewählt. Bei dem Printklemmen Ausgang kann man sich entscheiden ob der Stecker Output5A genutzt wird welcher bündig mit dem Gehäuse ist oder Output5A/2 welcher raussteht. Empfohlen wird wenn man den G3VM-1CR1 benutzt die Printklemmen zu verwenden, da nur diese wirklich für 5A ausgelegt sind.

Title: Solid State Relais		
Type:	Version: 4	Name: Johannes Bloos
Date: 12.02.2020	Size: A4	Sheet: of
File: SU811.SchDoc		

Physikalisches Institut Heidelberg

SU811 Solid state relais – Layout TOP

TOP

Connect DA 7 from the Arduino to input 1 of the solid state relais

Standard Jumper

In 1 - Out 1 Normally open

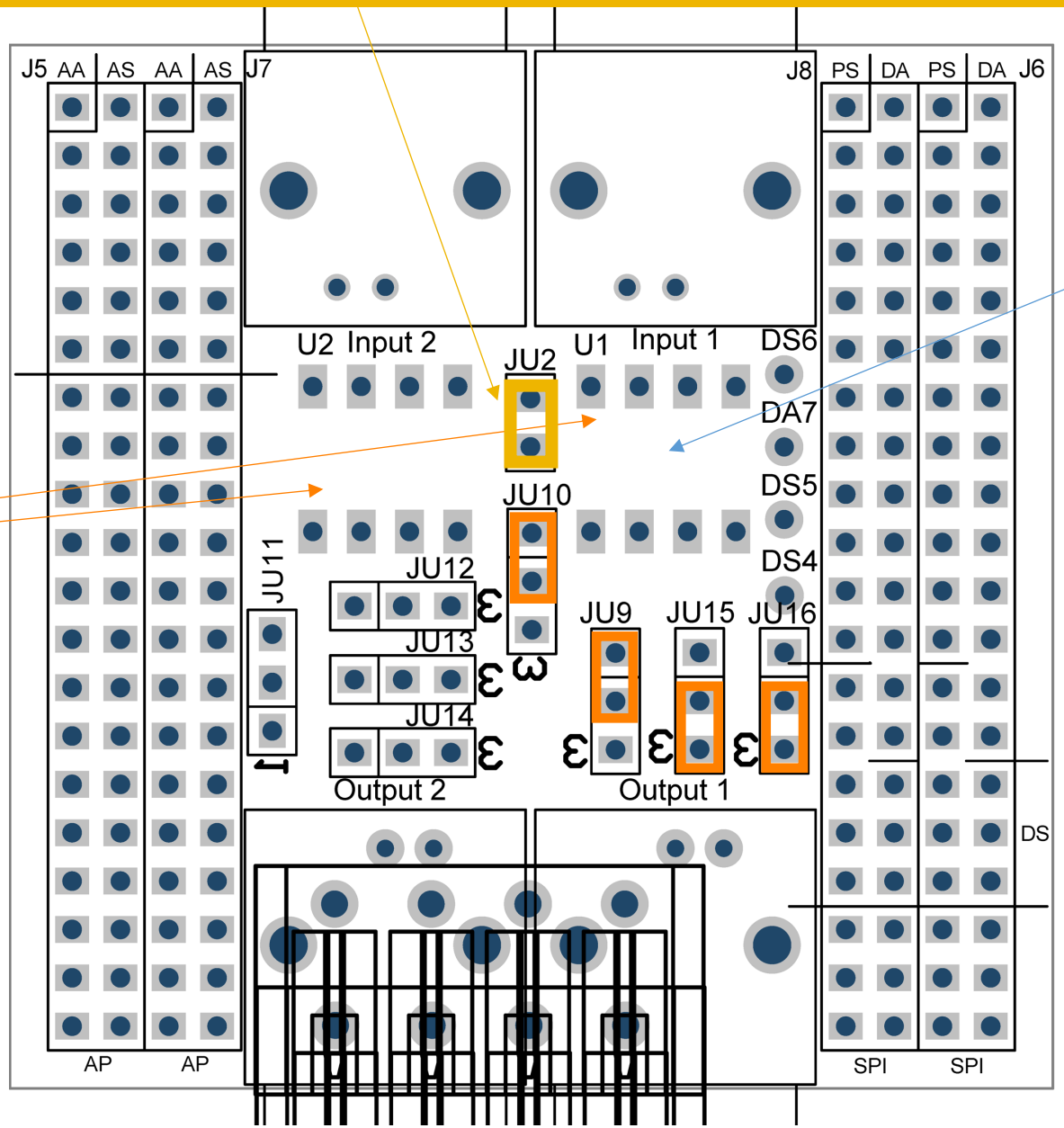

DIP8 Socket

Standard equipment of DIP8 socket channel 1: LBA716

SU811 Solid state relais – Layout BOTTOM

BOTTOM

Connect Ground of Arduino to ground of input 1 of the solid state relais

Standard Jumper

In 1 - Out 1 Normally open

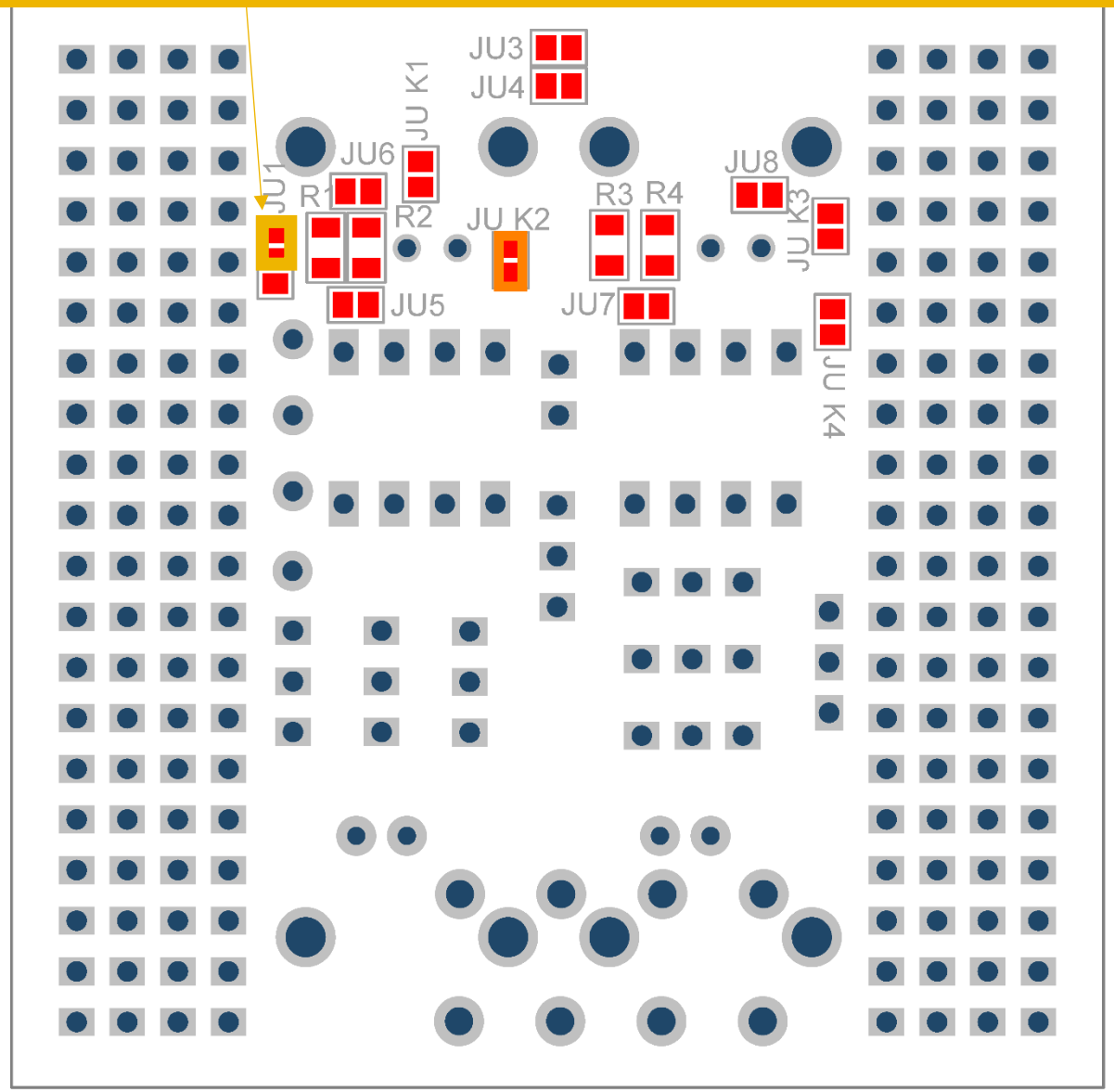

Interlock and data logging – flow chart

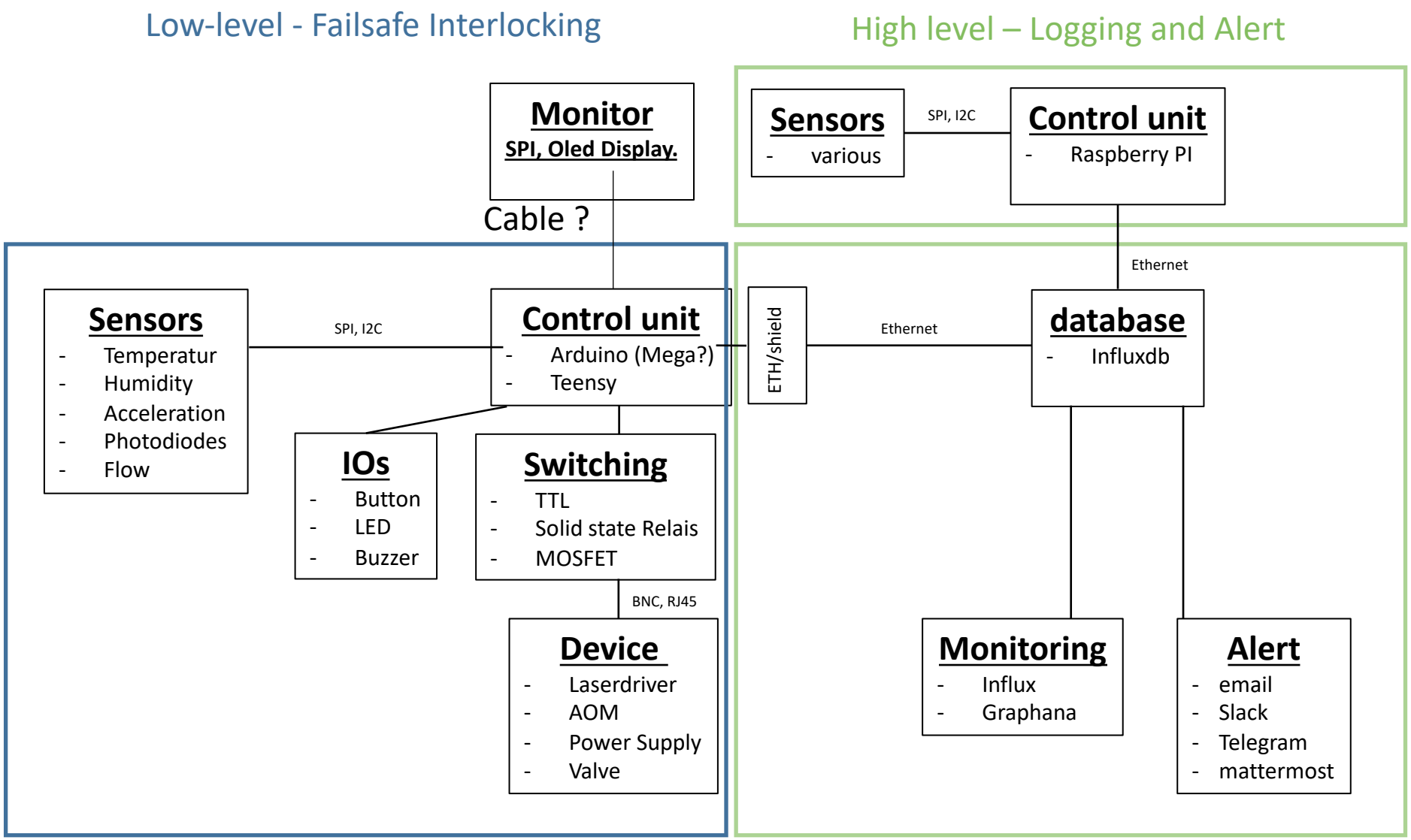

e-lego unit

Applications

- Fiber interlock and other Photodiode interlock
- Waterflow interlock
- Watersensor on the floor
- Resistor Monitor interlock
- Logic
- RF power interlock
- Temperatursenor interlock

- https://www.amazon.de/ARCELI-Arduino-Mega-ATmega2560-CH340G-Elektronik/dp/B07MQ1J9MR/ref=asc_df_B07MQ1J9MR/?tag=googshopde-21&linkCode=df0&hvadid=204476351460&hvpos=&hvnetw=g&hvrand=12755290115669277852&hvpone=&hvptwo=&hvqmt=&hvdev=c&hvdvcmdl=&hvlocint=&hvlocphy=9041989&hvtargid=pla-718074181409&psc=1&th=1&psc=1

→ E-lego Mini Mega Adapter board:

- Mini mega (oder Mega)
- „Display port“ : connector für LCD Display port (evtl. RJ45 or USB-C or HDMI mini)
- 3 individual I2C or SPI (bitbang, siftware I2C)
- One connector for a sensor
- Power (Arduino 5V or extra Lin Reg module, +6 -6V low drop, Supply 2 x 7.5 V)
- Ethernet shield
- https://www.amazon.de/ARCELI-Ethernet-Netzwerkmodul-Schnittstelle-WIZ820io/dp/B09DYFLMJG/ref=asc_df_B09DYFLMJG/?tag=googshopde-21&linkCode=df0&hvadid=546542272456&hvpos=&hvnetw=g&hvrand=5494524256787710571&hvpone=&hvptwo=&hvqmt=&hvdev=c&hvdvcmdl=&hvlocint=&hvlocphy=9041989&hvtargid=pla-1649361034312&psc=1&th=1&psc=1

e-lego module

RJ45 Connector Module – SU808

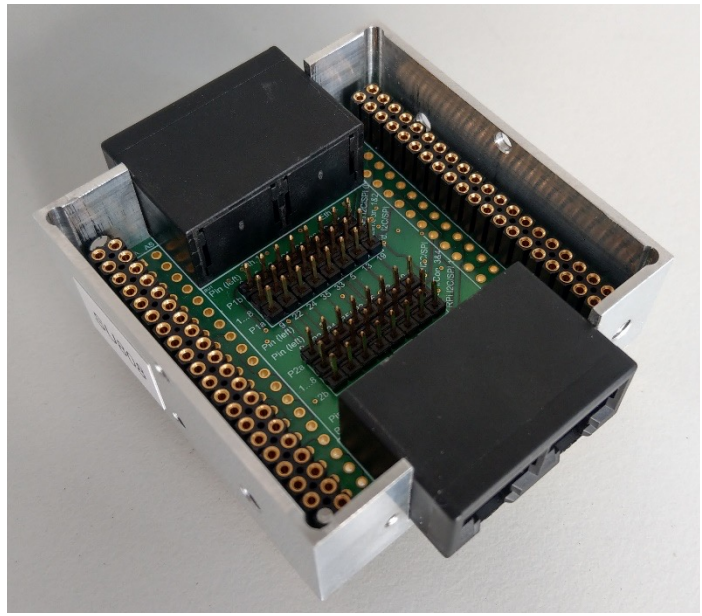

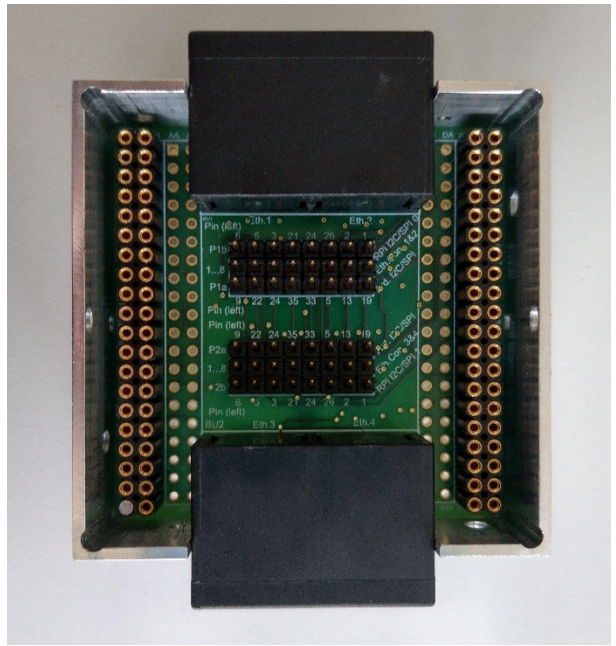

Feature:

- pin 2 to 5 have a protaction against voltages outside 0V < signal < 5V
- Can ve also used for the RPi

RJ45 Connector Module - SU808

Remove connection to ground plane from this GND-pin on template

Remove connection between the +5V pins on template

8 x 3 pin row grid 2.54mm Central line connected to Eth. Con. 1 and 2 in parallel

8 x 3 pin row grid 2.54mm Central line connected to Eth. Con. 3 and 4 in parallel

Remove connection to ground plane from this GND-pin on template

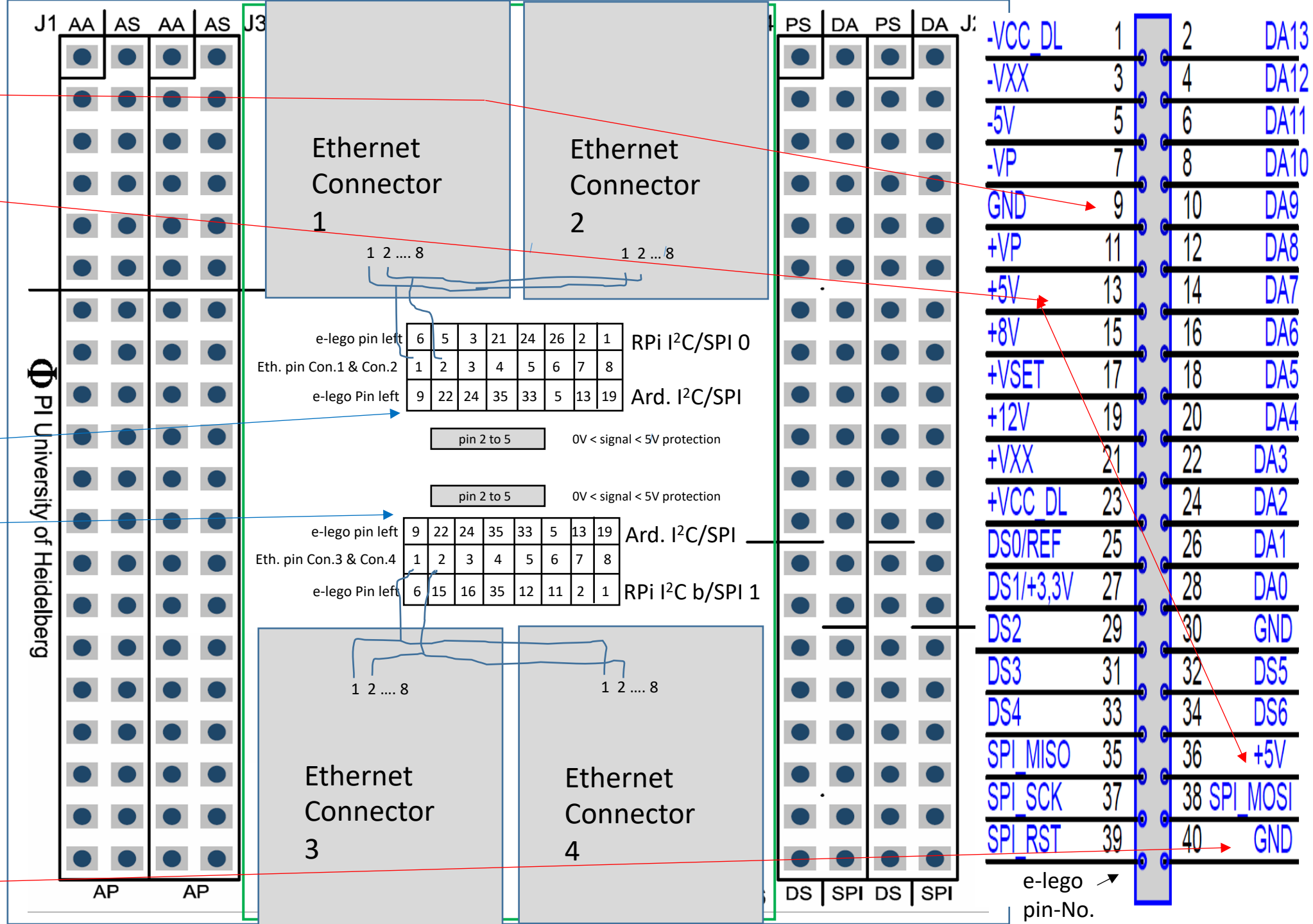

SU808 Top overlay (Beschriftungsdruck)

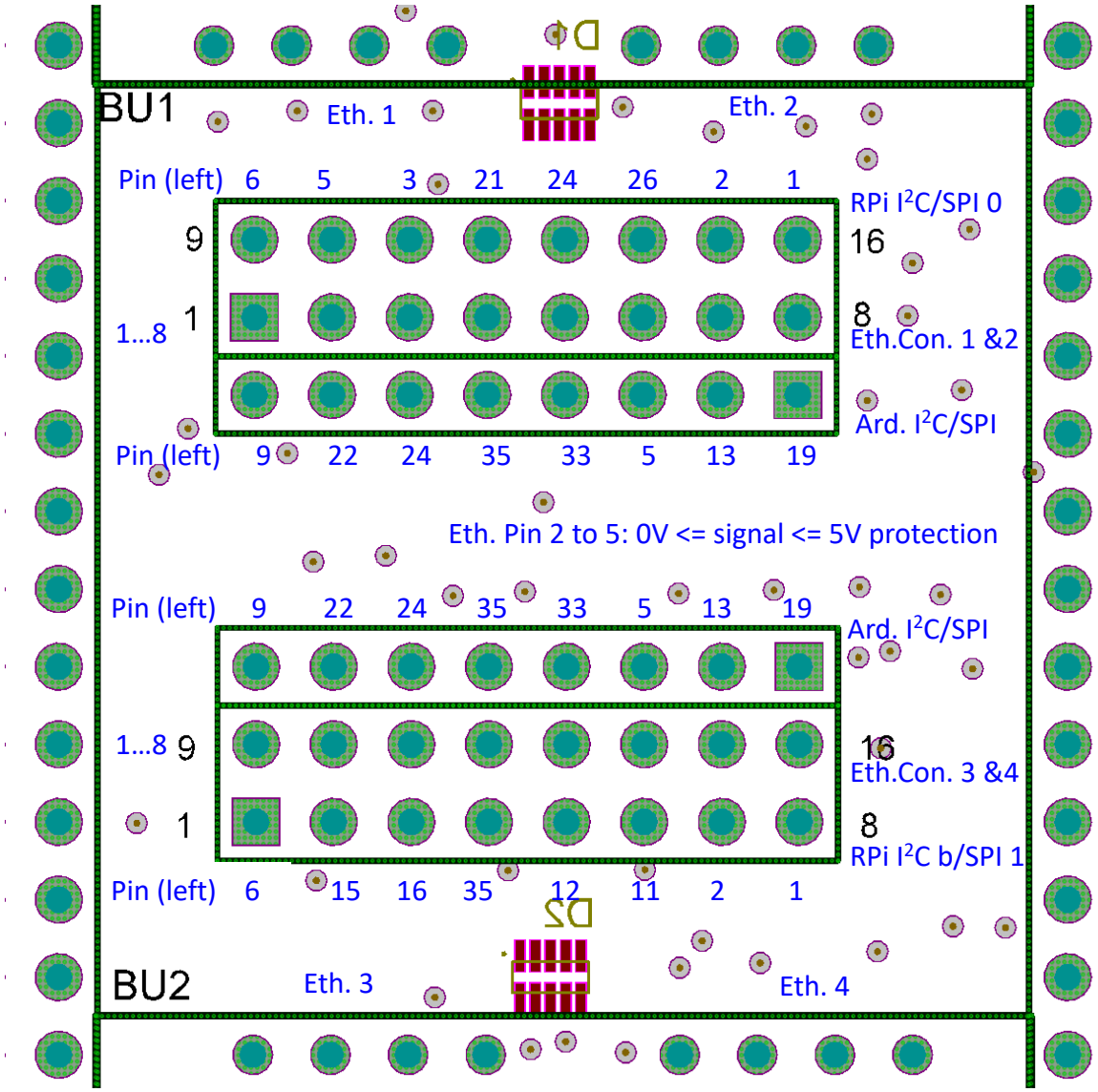

RJ45 Connector Module – SU808

Pin-table

RJ45 Pin	Ethernet	Own definition	I^2C	SPI	RPi I^2C	RPi I^2C b	RPi SPI 0	RPi SPI 1	Ard. I^2C	Arduino SPI
1	TX+	GND	GND	GND	6 (DA11)	[GND]			9 (GND)	
2	Tx-	SCL/SCLK	SCL	SCLK	5 (-5V)	15 (+8V) [GPIO22]	23 (+VCC_DL)	40 (GND)	22 (DA3)	37 (SPI_SCLK)
3	Rx+	SDA/MOSI	SDA	MOSI	3 (-VXX)	16 (DA6) [GPIO23]	19 (+12V)	38 (SPI MOSI)	24 (DA2)	38 (SPI_MOSI)
4	n/c	MISO		MISO			21 (+VXX)	35 (SPI MISO)		35 (SPI_MISO)
5	n/c	SS1 /CE0		SS1 /CE0			24 (DA2)	12 (DA8)		33 (DS4) has to be connected to SS pin on Arduino e-lego board
6	RX-	SS2 /CE1/V_neg		SS2 /CE1			26 (DA1)	11 (+Vp)		
7	n/c	5V			2 (DA13)	[5V]			13 (5V)	
8	n/c	V_pos			1 (-VCC_DL)	[3.3V]			19 (+12V)	

Legend: number: Pin-No. on e-lego board left side (e-lego pin label) [RPi pin label]

RJ45 Connector Module - SU808

SPI Connection for PT100 / PT1000 Module Adafruit MAX31865

4 connectors per board

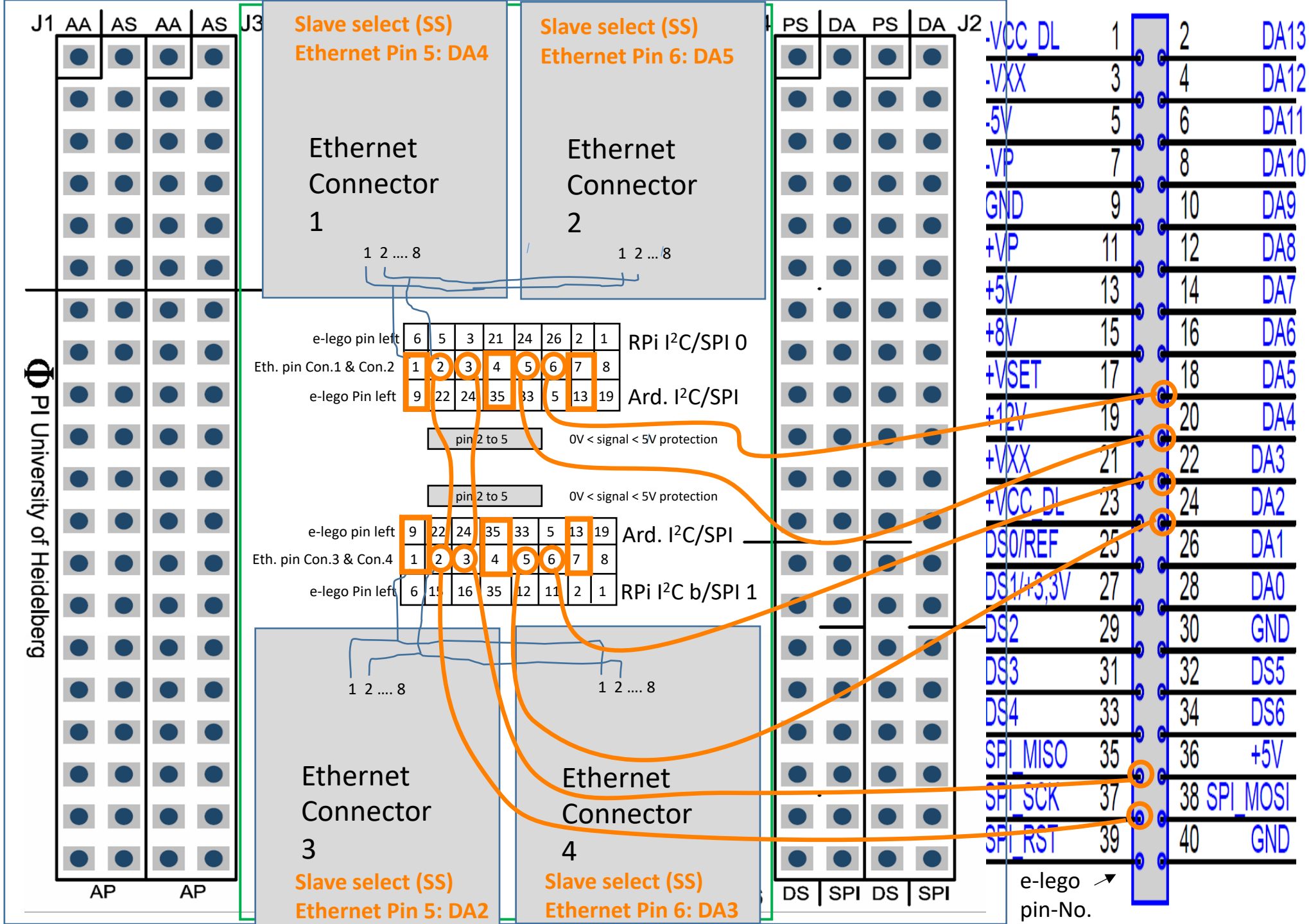

RJ45 Connector Module - SU808

SPI Connection for PT100 / PT1000 Module Adafruit MAX31865

2 connectors per Board

Board 1

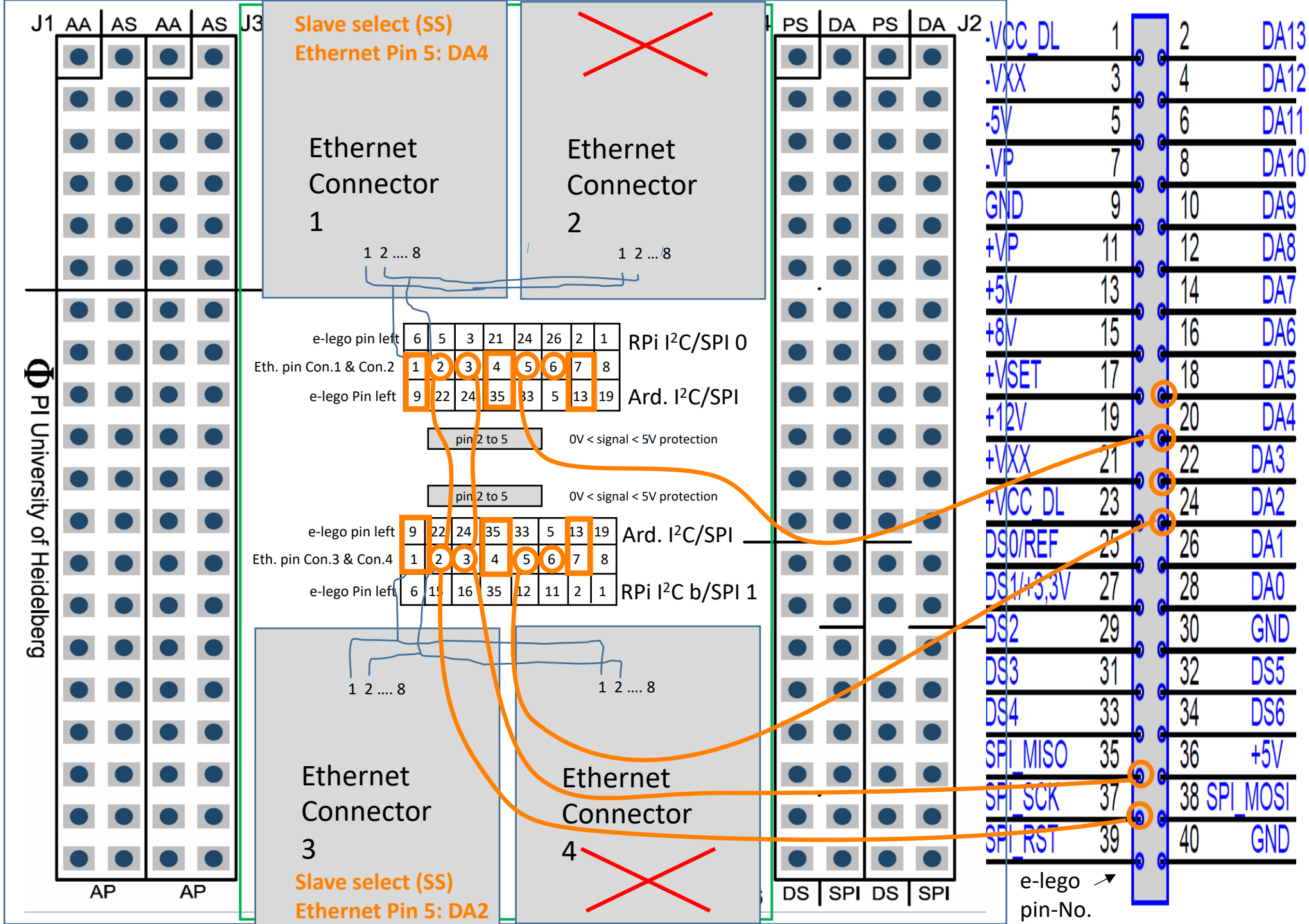

RJ45 Connector Module - SU808

SPI Connection for PT100 / PT1000 Module Adafruit MAX31865

2 connectors per Board

Board 2

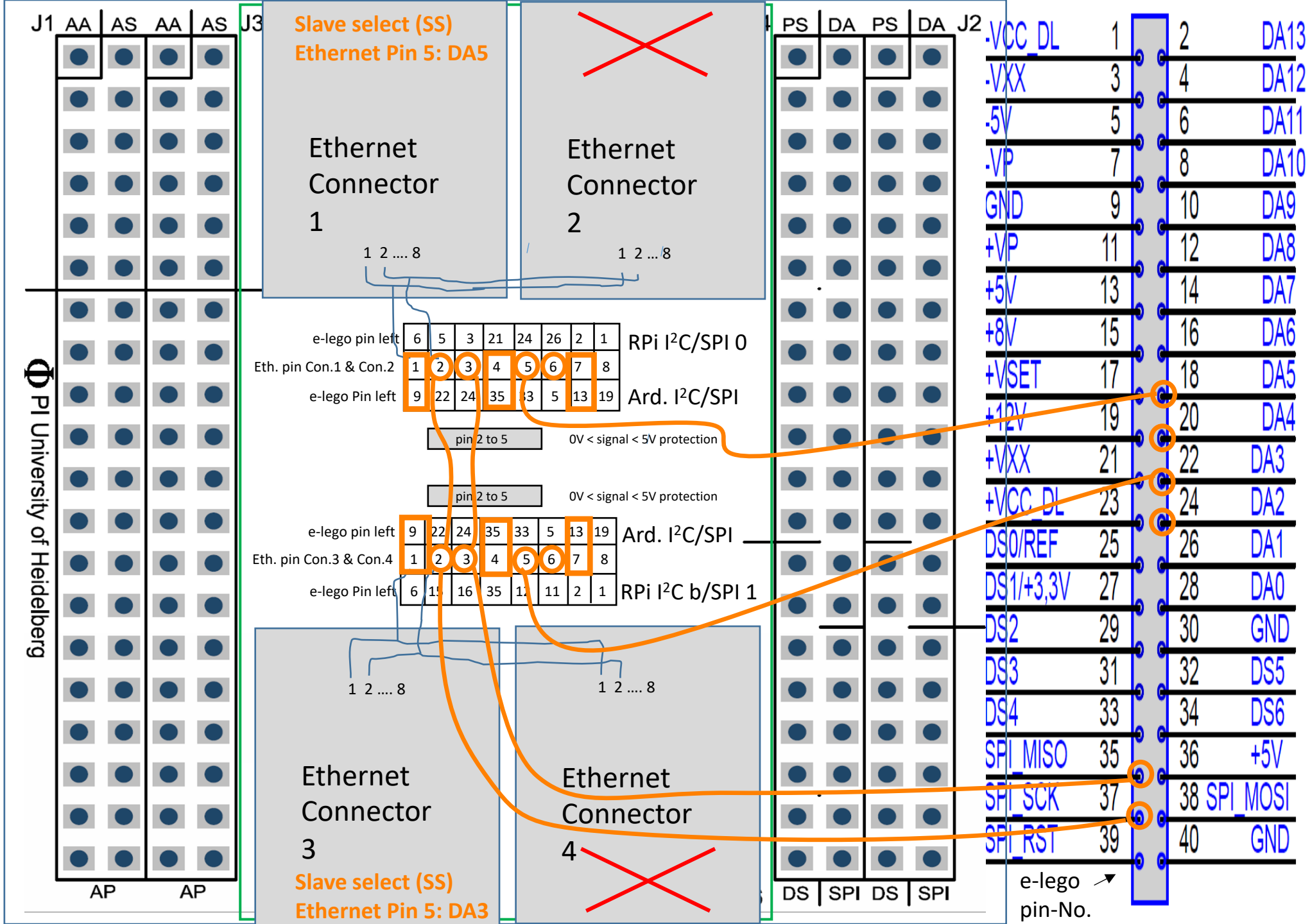

RJ45 Connector Module – SU808

Pin-table Arduino SPI

4 connectors per board		
RJ45 Conecctor No	Slave select Pin Ethernet cable	e-lego
1	5	DA4
2	6	DA5
3	5	DA2
4	6	DA3
2 connectors per board - board 1		
RJ45 Conecctor No	Slave select Pin Ethernet cable	e-lego
1	5	DA4
3	5	DA2
2 connectors per board - board 2		
RJ45 Conecctor No	Slave select Pin Ethernet cable	e-lego
1	5	DA5
3	5	DA3

RPi-Pins: Raspberry Pi can be plugged to e-lego ethernet connector module: ***Do not combine with other e-lego modules !***

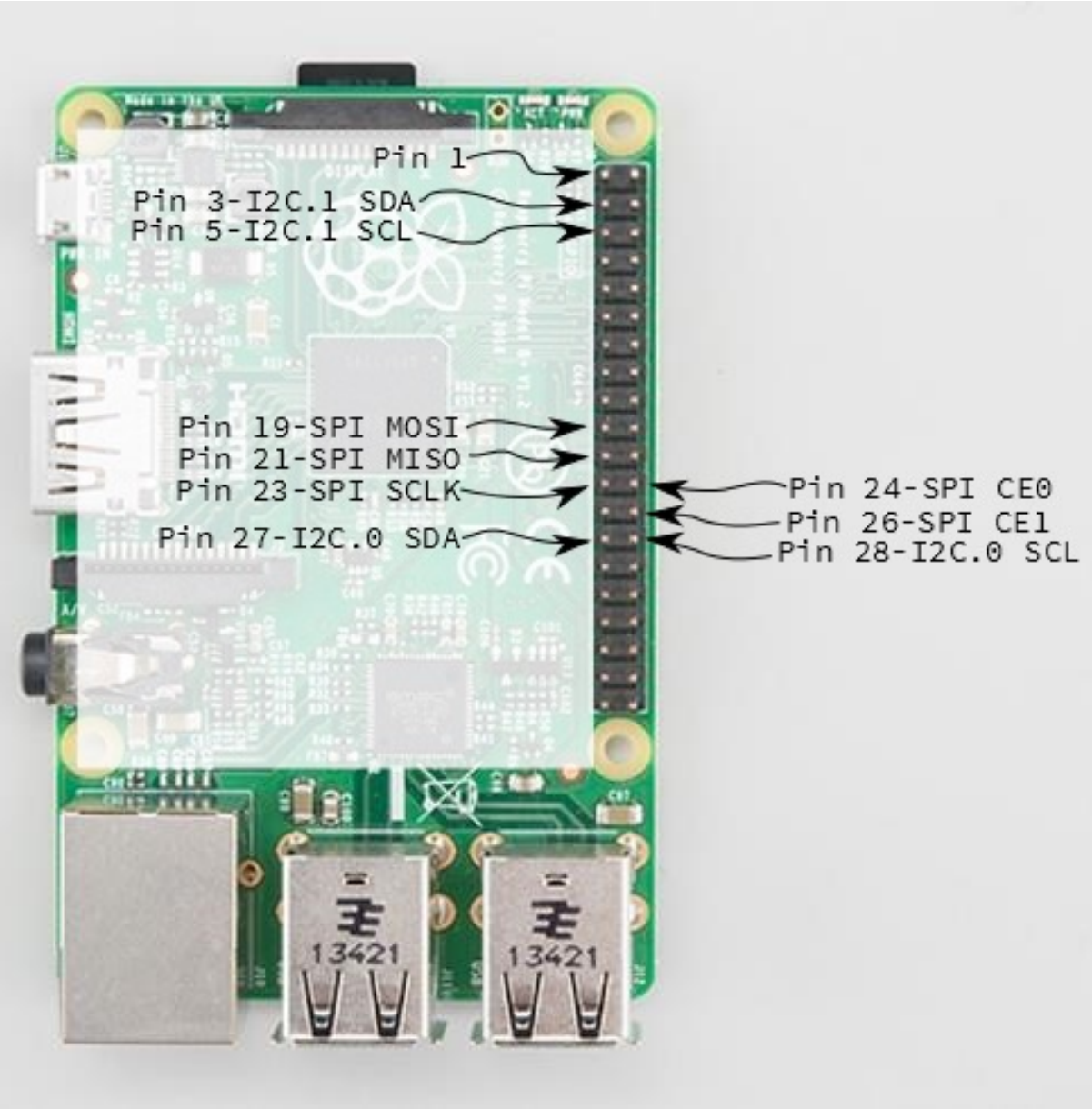

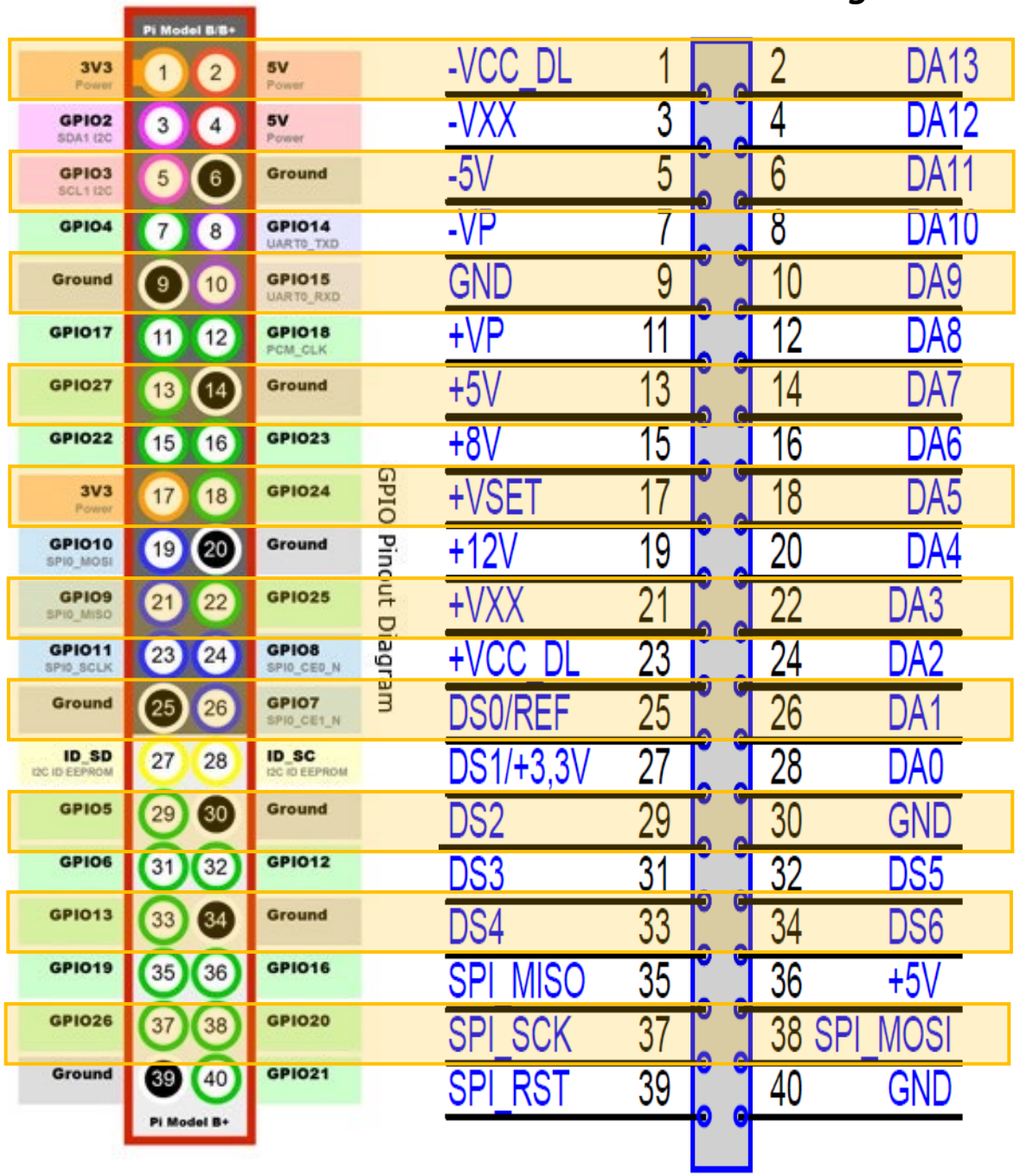

SPI and Ethernet Pins

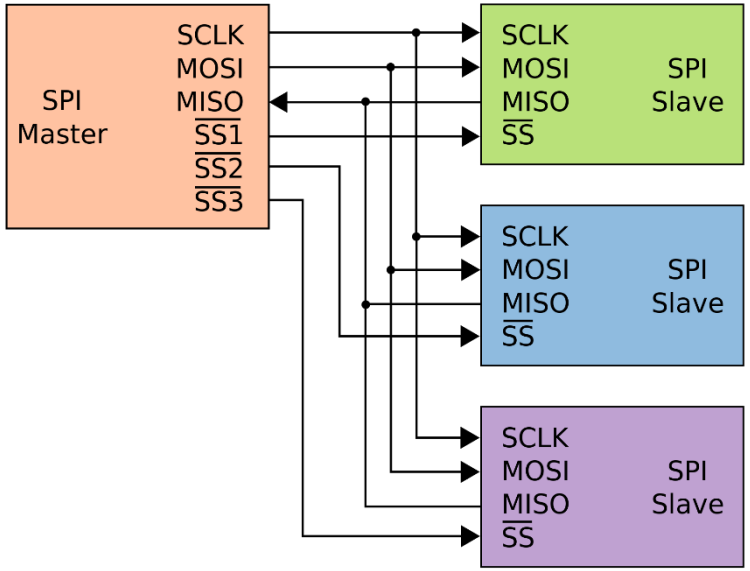

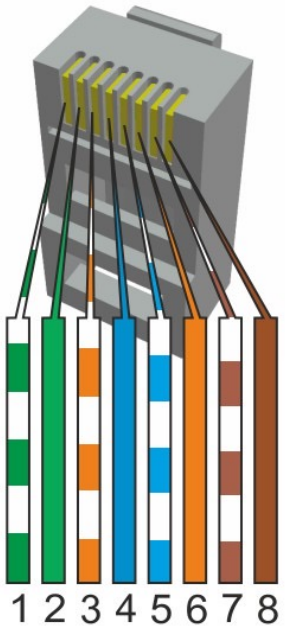

T-568A

Pin	Description	10base-T	100Base-T	1000Base-T
1	Transmit Data+ or BiDirectional	TX+	TX+	BI_DA+
2	Transmit Data- or BiDirectional	TX-	TX-	BI_DA-
3	Receive Data+ or BiDirectional	RX+	RX+	BI_DB+
4	Not connected or BiDirectional	n/c	n/c	BI_DC+
5	Not connected or BiDirectional	n/c	n/c	BI_DC-
6	Receive Data- or BiDirectional	RX-	RX-	BI_DB-
7	Not connected or BiDirectional	n/c	n/c	BI_DD+
8	Not connected or BiDirectional	n/c	n/c	BI_DD-

PinoutsGuide.com

Adapter for RPi to RJ45 Connector Module SU808

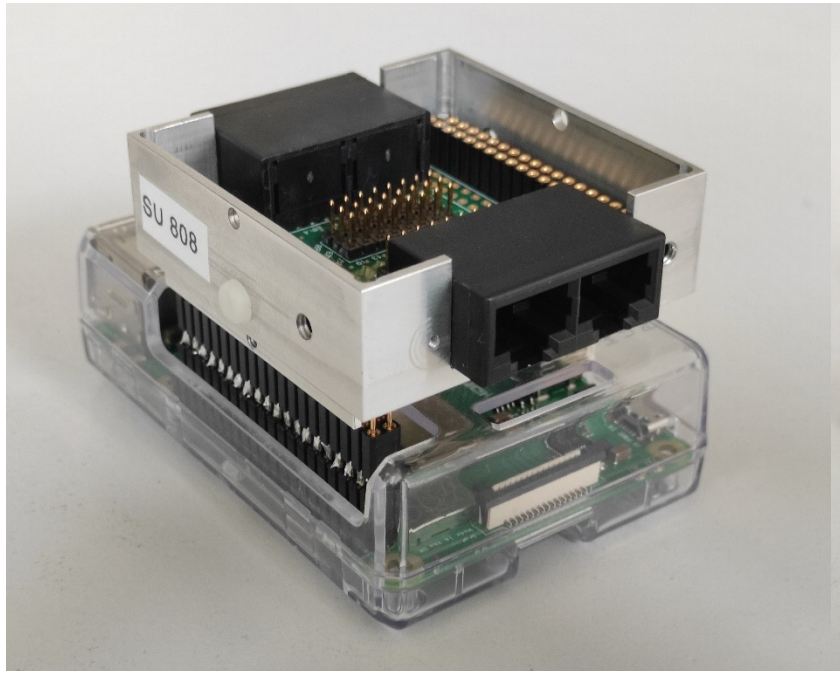

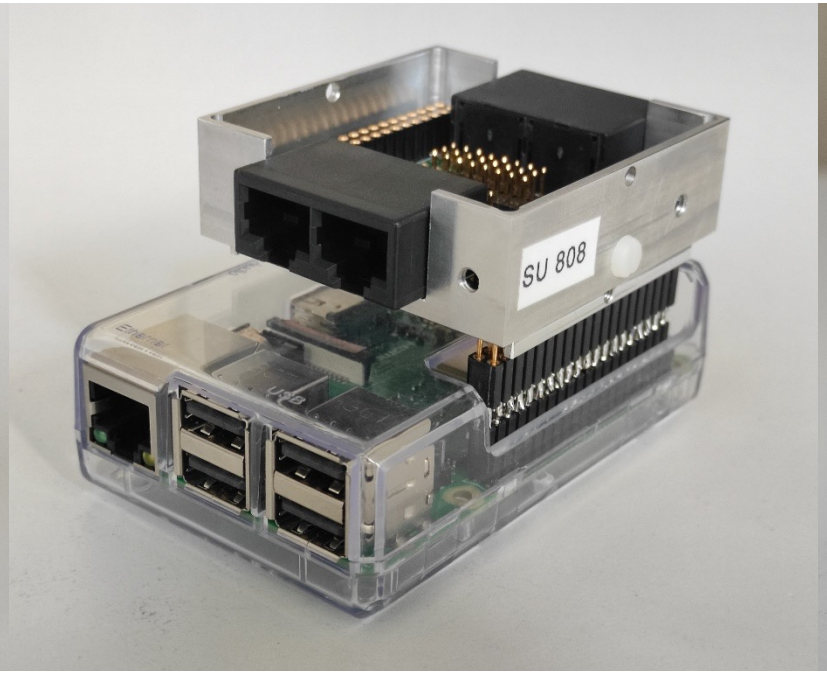

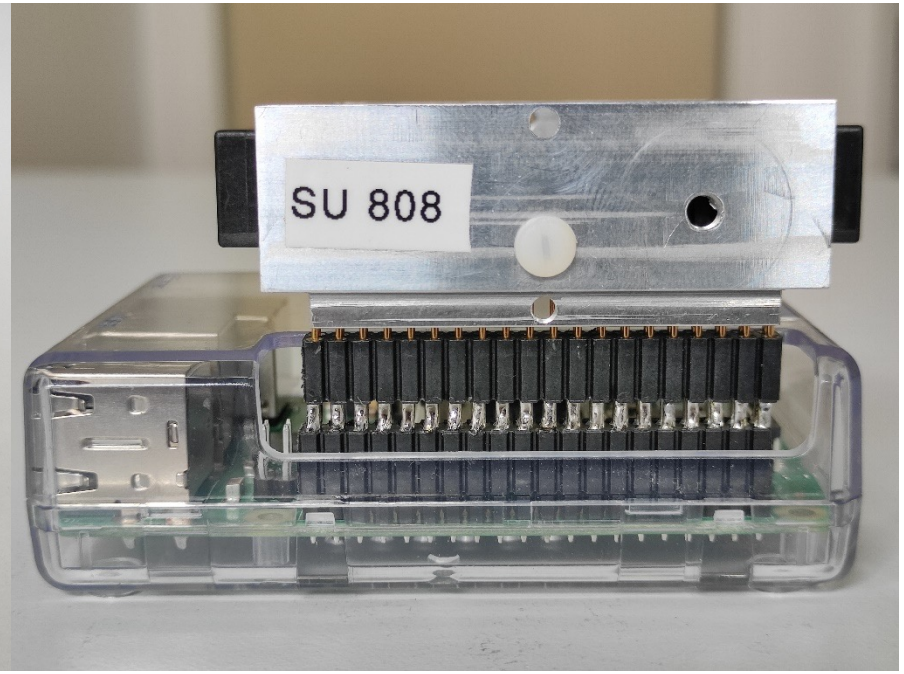

→ solder 2 of them together with the pins face to face
(length 2 x 40 pins)

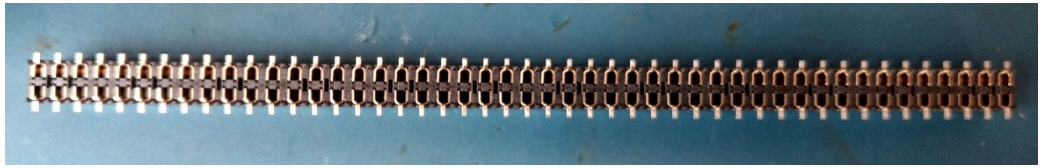

Where to get it from: e-workshop stock

SU802 Notes production

- Check for the latest production version and check for additional notes on the workshop server
- Add Polarity Protection: Pin 39: Top: Block pin with solder. Bottom: Cut pin
- Put PCBs into Aluminium case. Drawings of the cases can be found here:
  \\pi2\microcontroller\QD-Ultracold\Q-El - e-lego\Cases and Heatsink
  Case needs to be checked, which one is needed (maybe Case BNC fits)
- Label the finished boxes with the Part-number **SU808**
- Add some notes to the workshop server if there has been some modifications to the previous production version
- If not available yet, make pictures of the produced component an put them on the workshop server
- If not available yet, leave one module in the e-workshop Muster box and label it with „Muster E-Werkstatt“

Connecting a sensor to the RPi / Arduino

Sensor PCB

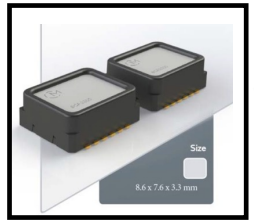

ribbon cable
to minimize strain

Adapter

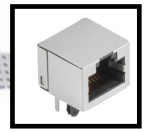

Ethernet cable

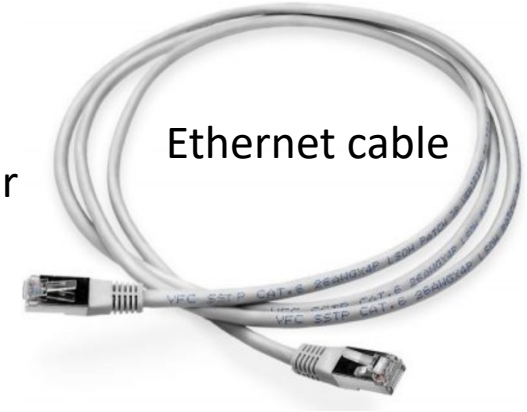

muRata

SCL3300-D01

Res: 0.1 mrad

e-lego
RJ45-SPI Adapter

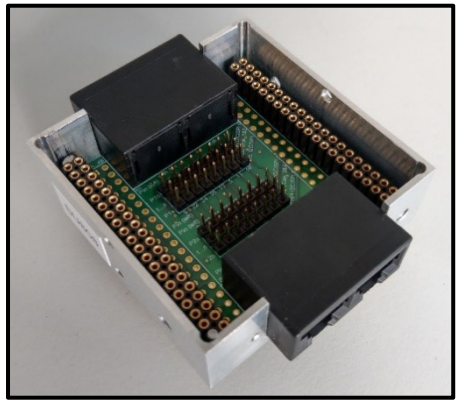

Raspberry Pi

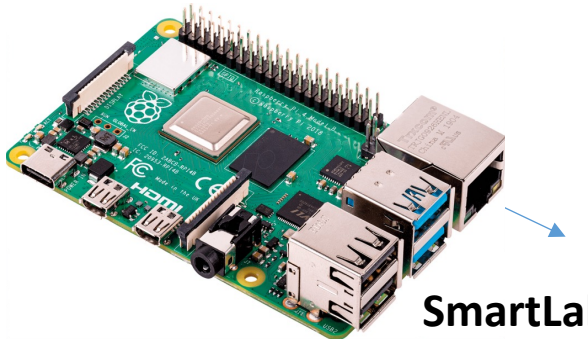

SmartLab Database

e-lego module

General OpAmp Module SU805

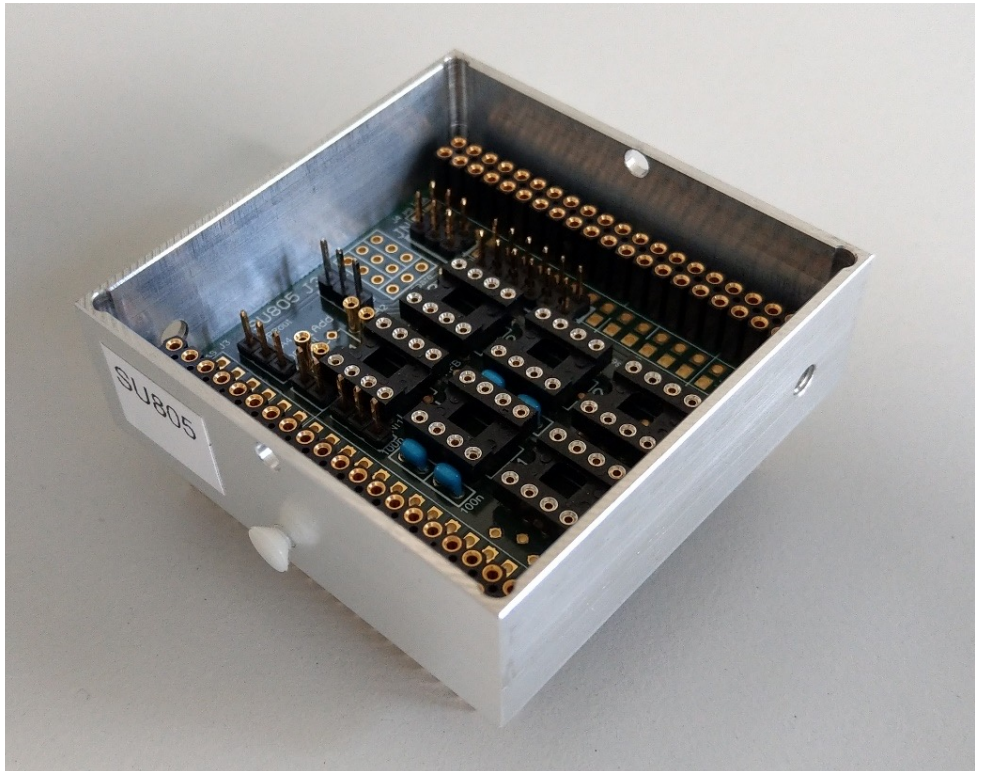

- two DIP 8 sockets with resistor banks for Operational Amplifiers
- Application: Design your own OpAmp Circuit

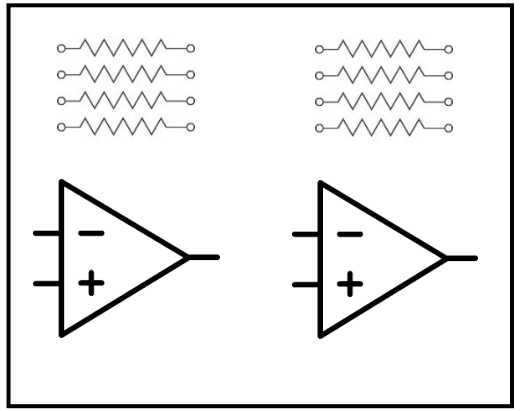

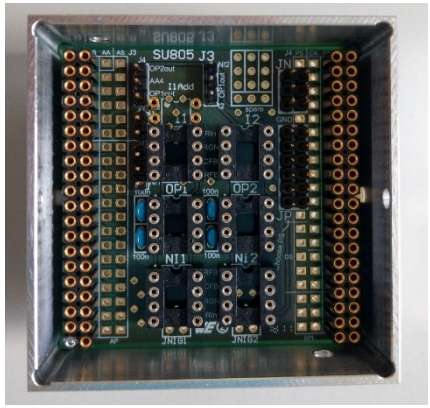

The Non-inverting Op-amp Circuit

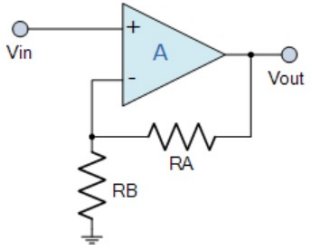

$$\frac{Vout}{Vin} = 1 + \frac{RA}{RB}$$

The Voltage Follower Op-amp Circuit

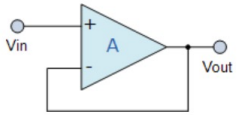

Vout = Vin
Voltage Gain = +1

The Inverting Op-amp Circuit

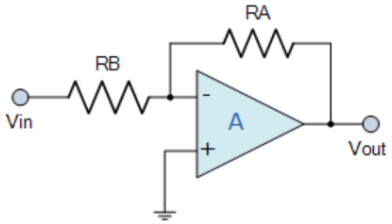

$$Av = \frac{Vout}{Vin} = -\frac{RA}{RB}$$

The Op-amp Inverter Circuit

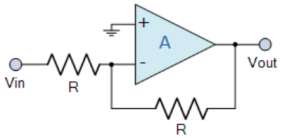

Voltage Gain = -1
Input Impedance = R

The Voltage Adder Op-amp Circuit

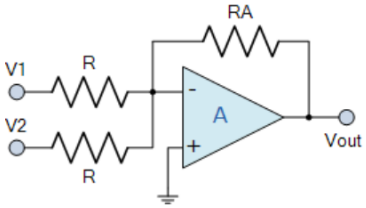

$$Vout = -\frac{RA}{R}(V1 + V2)$$

The Comparator Op-amp Circuit

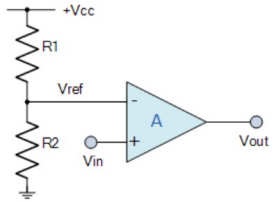

$$Vref = Vcc\left[\frac{R2}{R1 + R2}\right]$$

Vout when Vin > Vref

The Voltage Subtractor Op-amp Circuit

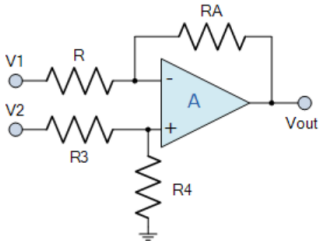

$$Vout = -\frac{RA}{R}(V2 - V1)$$

From:

https://www.electronics-tutorials.ws/opamp/op-amp-building-blocks.html

General OpAmp Module
SU805

Select the resistors you like to have

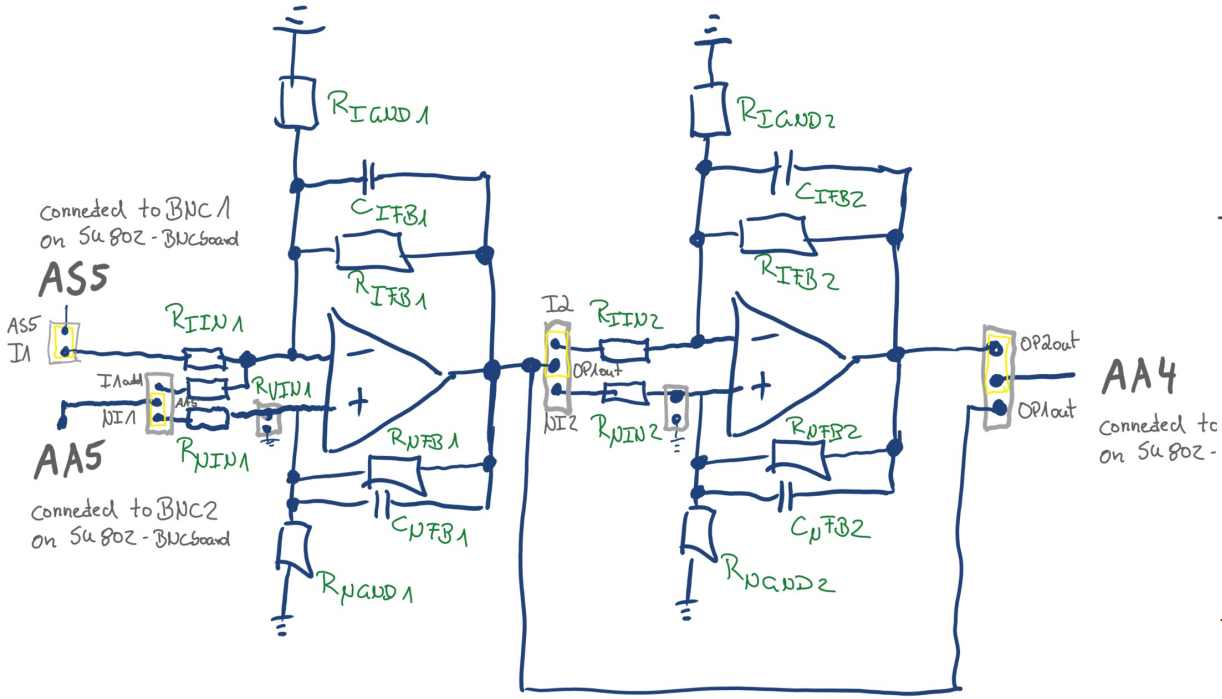
connected to BNC1
on SU802-BNCboard
AS5
AS5
I1
I1add
NI1
AA5
connected to BNC2
on SU802-BNCboard
RIGND1
CIFB1
RIFB1
RIIN1
RNIN1
RNIN1
RNFB1
CNFB1
RNGND1
I2
RIIN2
OP1out
NI2
RNIN2
RIGND2
CIFB2
RIFB2
RNFB2
CNFB2
RNGND2
OP2out
OP1out
AA4
connected to
on SU802-

The Non-inverting Op-amp Circuit

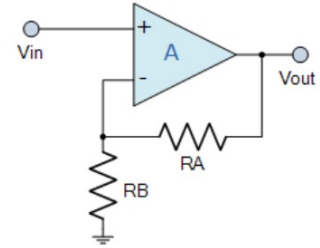

$$\frac{Vout}{Vin} = 1 + \frac{RA}{RB}$$

The Voltage Follower Op-amp Circuit

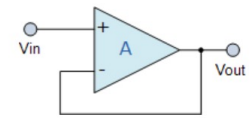

Vout = Vin
Voltage Gain = +1

The Inverting Op-amp Circuit

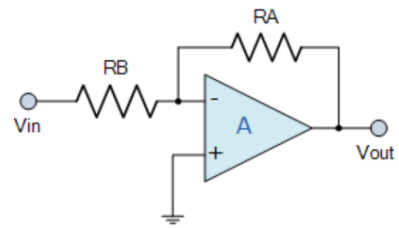

$$Av = \frac{Vout}{Vin} = -\frac{RA}{RB}$$

The Op-amp Inverter Circuit

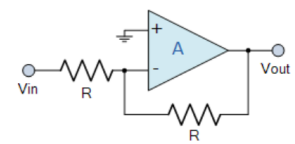

Voltage Gain = -1
Input Impedance = R

The Voltage Adder Op-amp Circuit

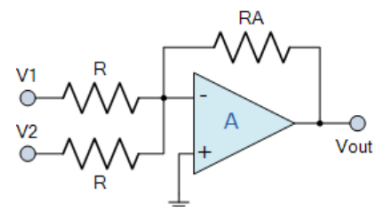

$$Vout = -\frac{RA}{R}(V1 + V2)$$

The Comparator Op-amp Circuit

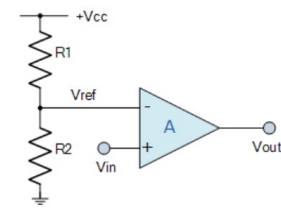

$$Vref = Vcc\left[\frac{R2}{R1 + R2}\right]$$

Vout when Vin > Vref

The Voltage Subtractor Op-amp Circuit

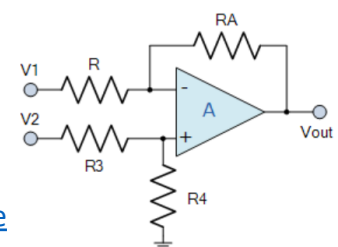

$$Vout = -\frac{RA}{R}(V2 - V1)$$

From:

https://www.electronics-tutorials.ws/opamp/op-amp-building-blocks.html

\\147.142.16.140\microcontroller\QD-Ultracold\Q-El - e-lego\Q-El-001 SU805 General OpAmp Module

General OpAmp Module
SU805

- Identify the resistors on the board
- Select the Power Supply via Jumpers
- Select input and out put pins via Jumpers

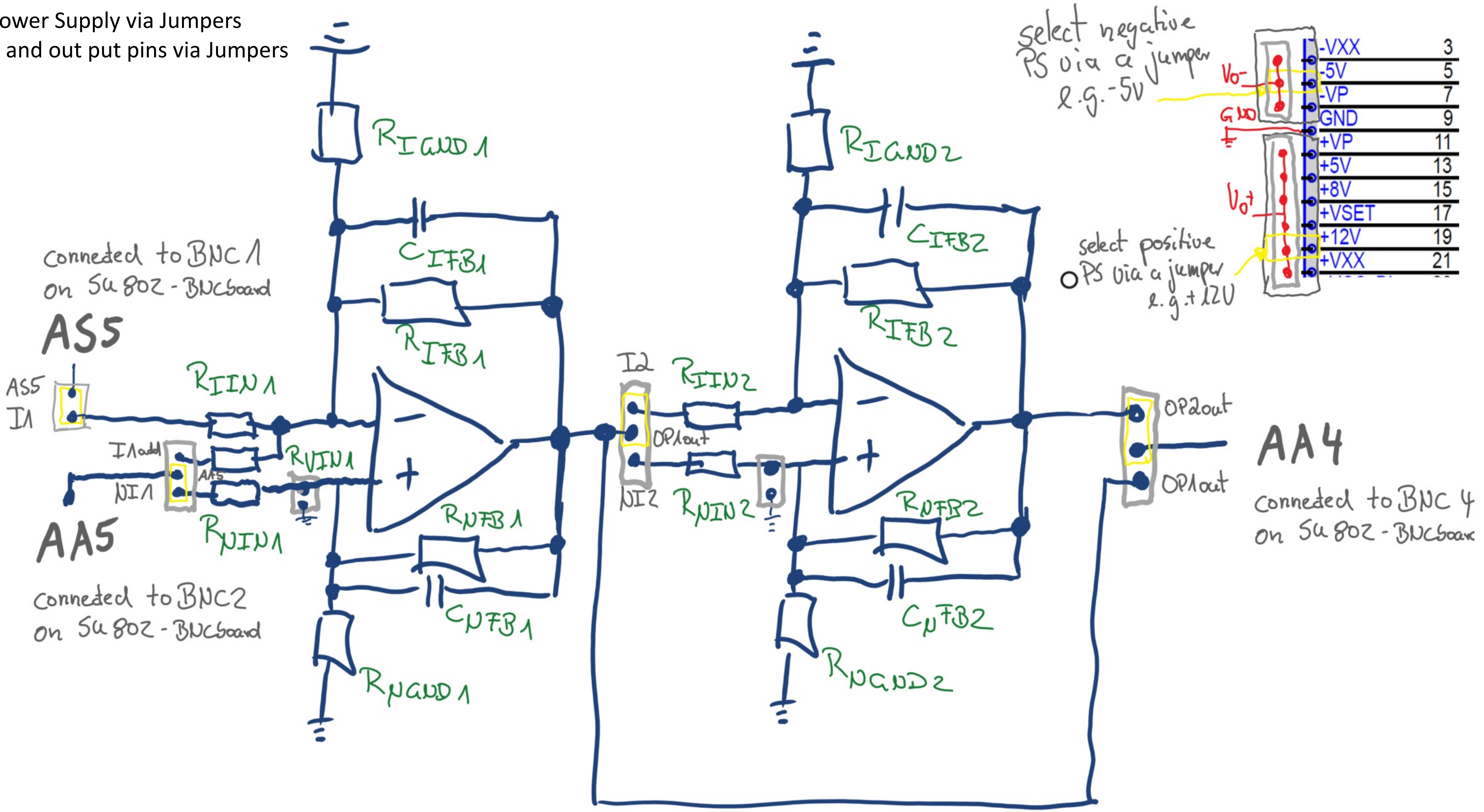

General OpAmp Module
SU805

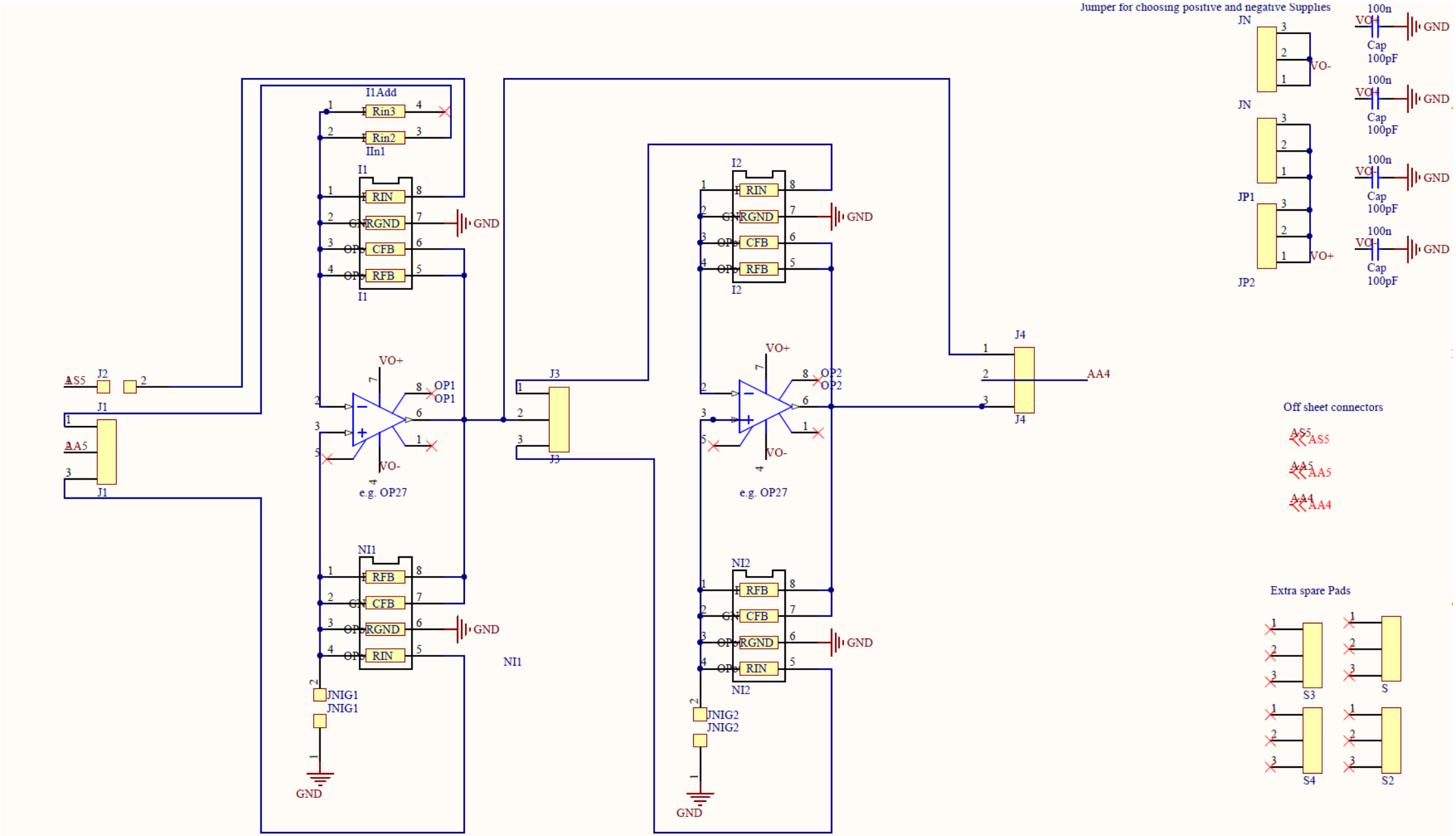

\\147.142.16.140\microcontroller\QD-Ultracold\Q-EI - e-lego\Q-EI-001 SU805 General OpAmp Module

General OpAmp Module
SU805

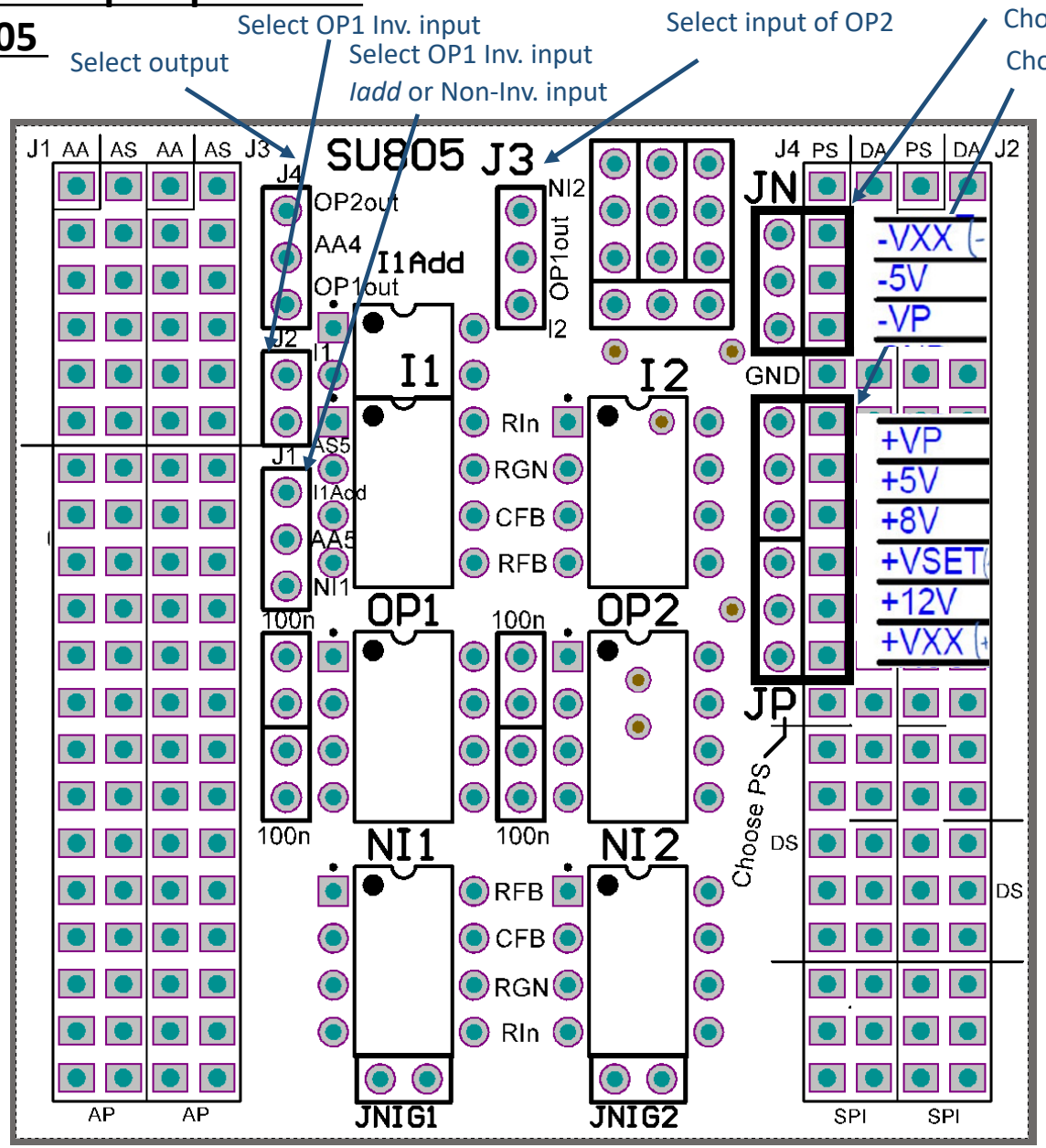

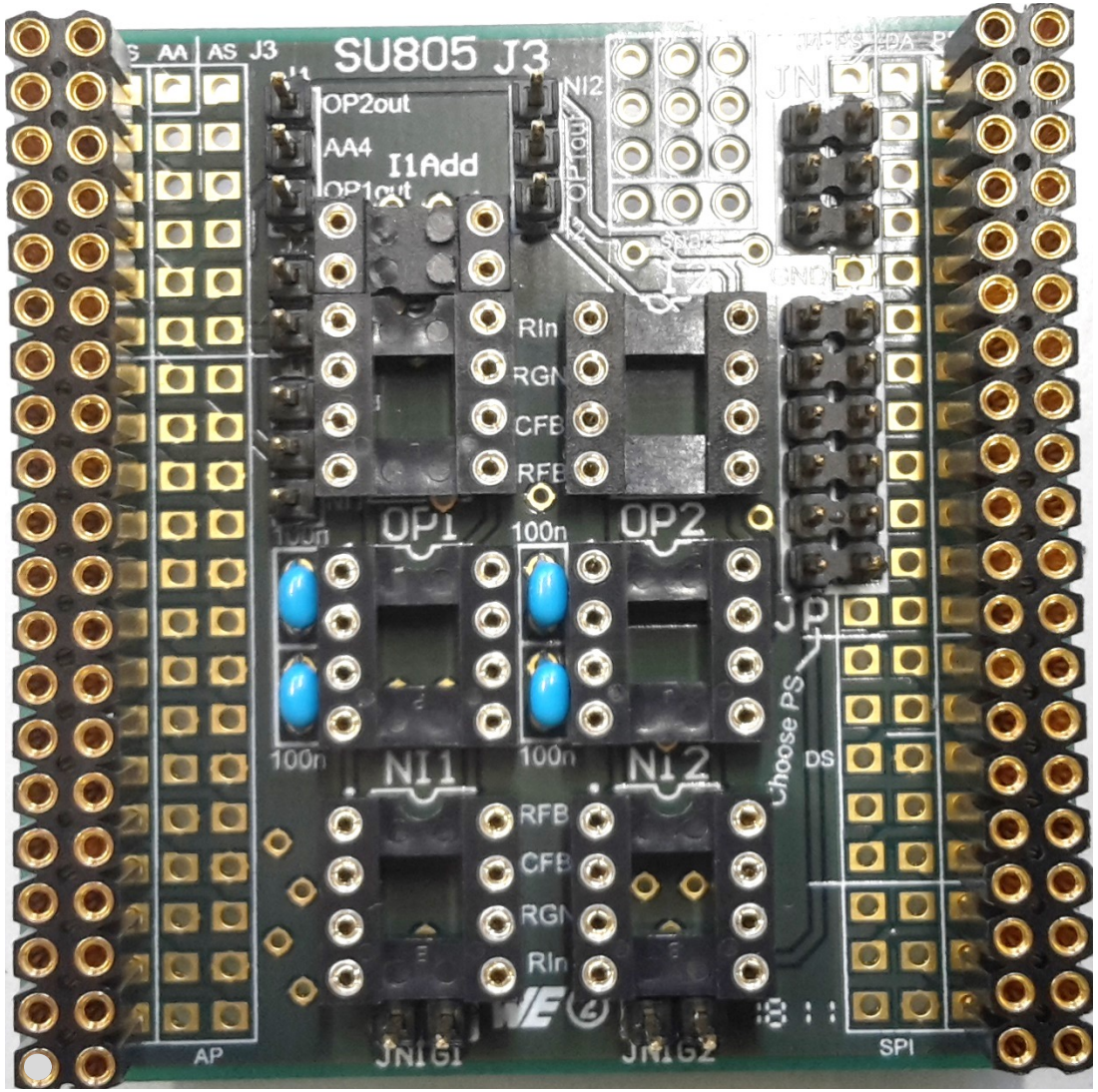

General OpAmp Module SU805

Bestückung und Komponentenliste

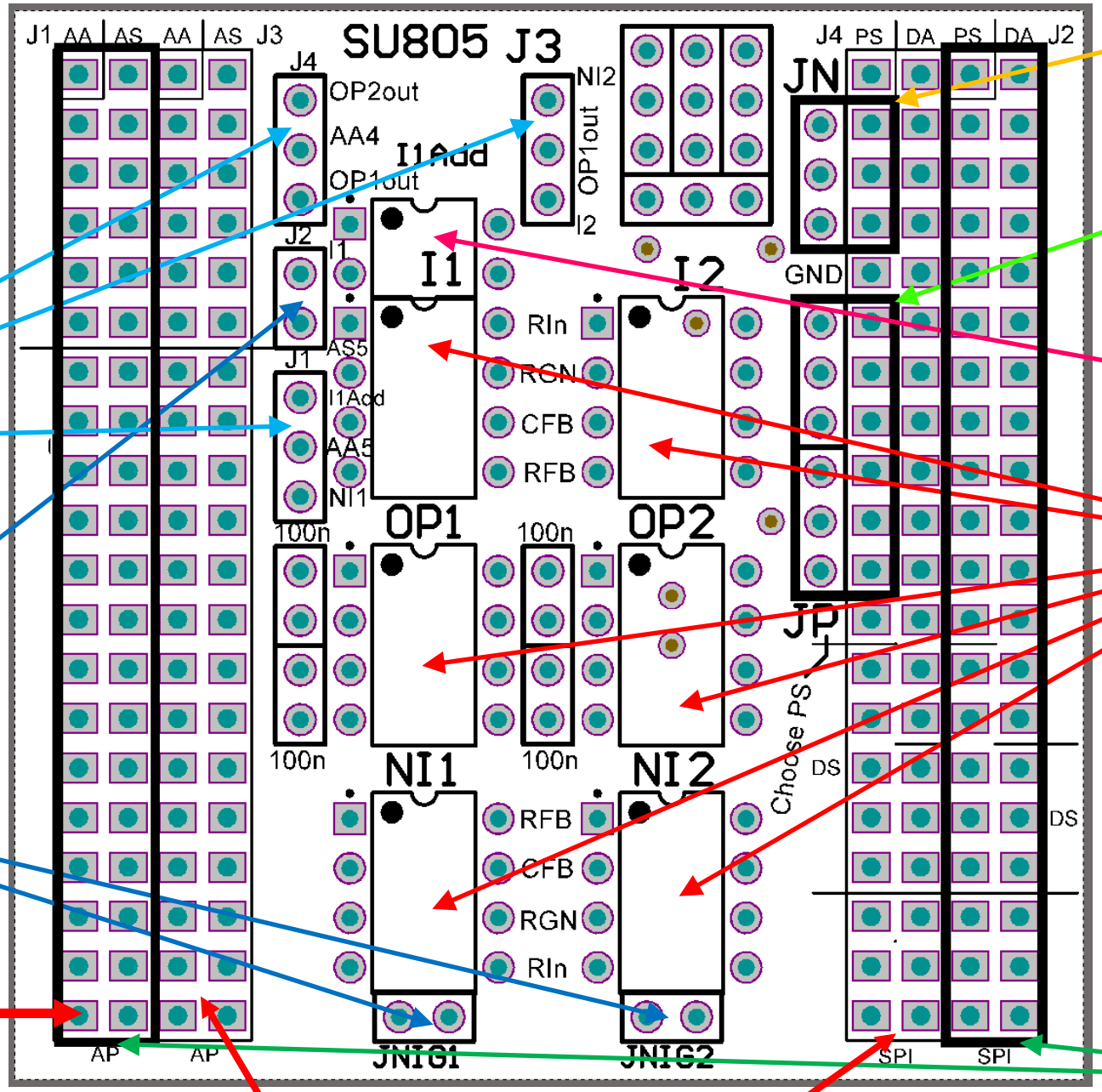

3 fach Jumperleiste
(2 Stück)

2 fach Jumperleiste
(2 Stück)

3 x 2 Pin Leiste
(1 Stück)

6 x 2 Pin Leiste
(1 Stück)

2 x 2 DIP Socket
(1 Stück)

4 x 2 DIP Socket
(4 Stück)

e-lego connectors
20 x 2 Stiftleiste
(2 Stück)

Top-side: - block Pin with solder
Bottom side: - cut Pin

Do not place the inner double-Pin-row

SU805 Notes production

- Check for the latest production version and check for additional notes on the workshop server
- Add Polarity Protection: Pin 39: Top: Block pin with solder. Bottom: Cut pin
- Put PCBs into Aluminium case. Drawings of the cases can be found here:
  \\pi2\microcontroller\QD-Ultracold\Q-El - e-lego\Cases and Heatsink Needed: **Basis Case**
- Label the finished boxes with the Part-number **SU805**
- Add some notes to the workshop server if there has been some modifications to the previous production version
- If not available yet, make pictures of the produced component an put them on the workshop server
- If not available yet, leave one module in the e-workshop Muster box and label it with „Muster E-Werkstatt“

Connector (SU802) for SU805 General Opamp

Jumper for SU805

Blue: factory jumper settings

AS5 towards OP1
Inverting In *I1*
If J2 placed

AA5 towards OP1
Inverting *In I1add*
Or Non-Inverting In *NI1*
Selected by J1

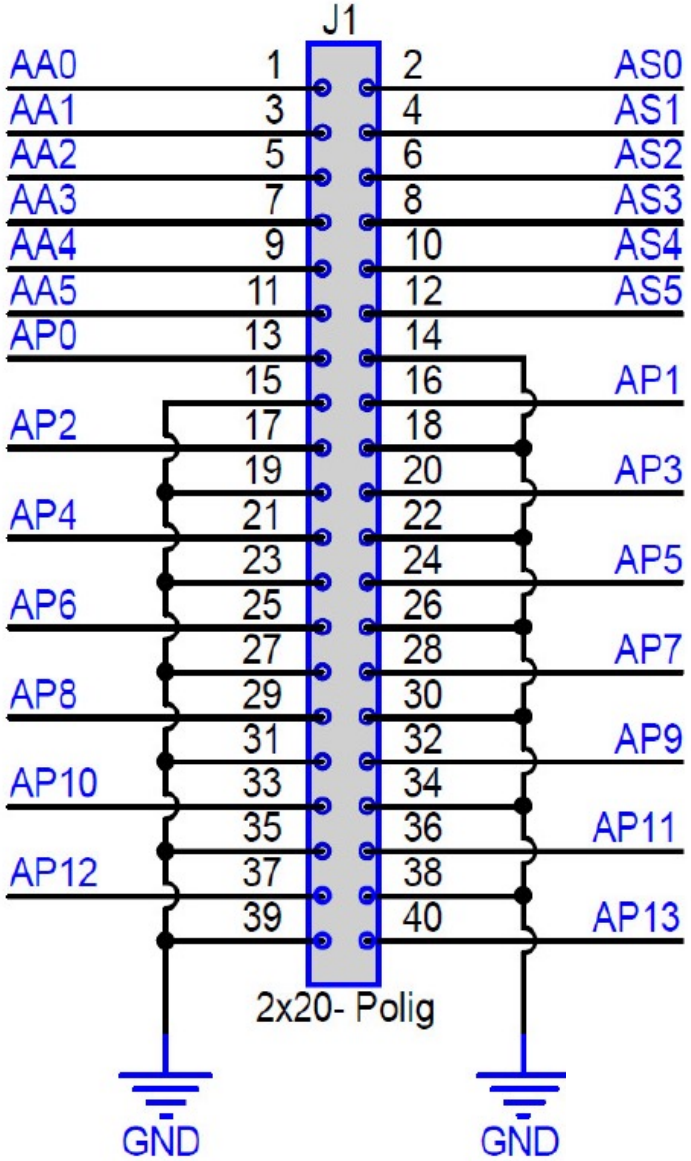

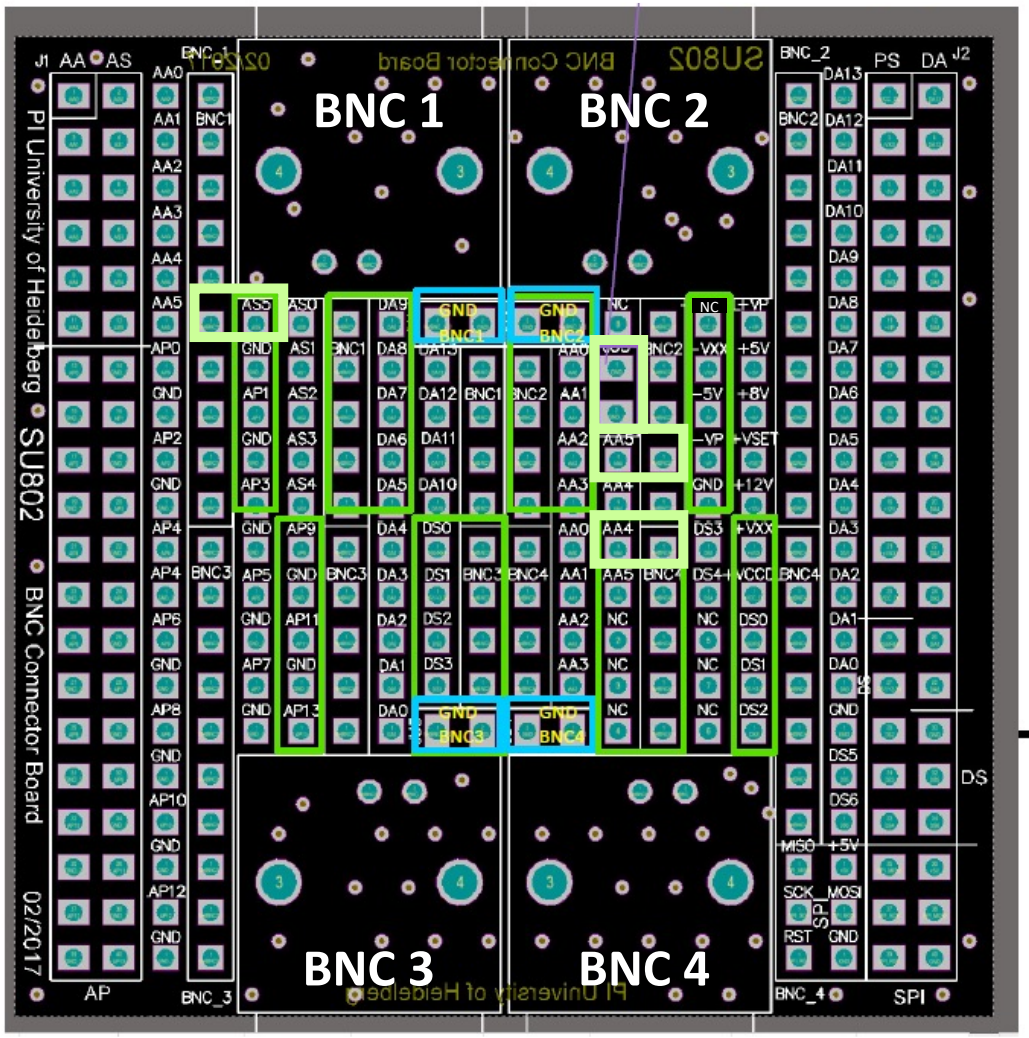

AA4
from OP1 out
Or from OP2 out
Selected by J4

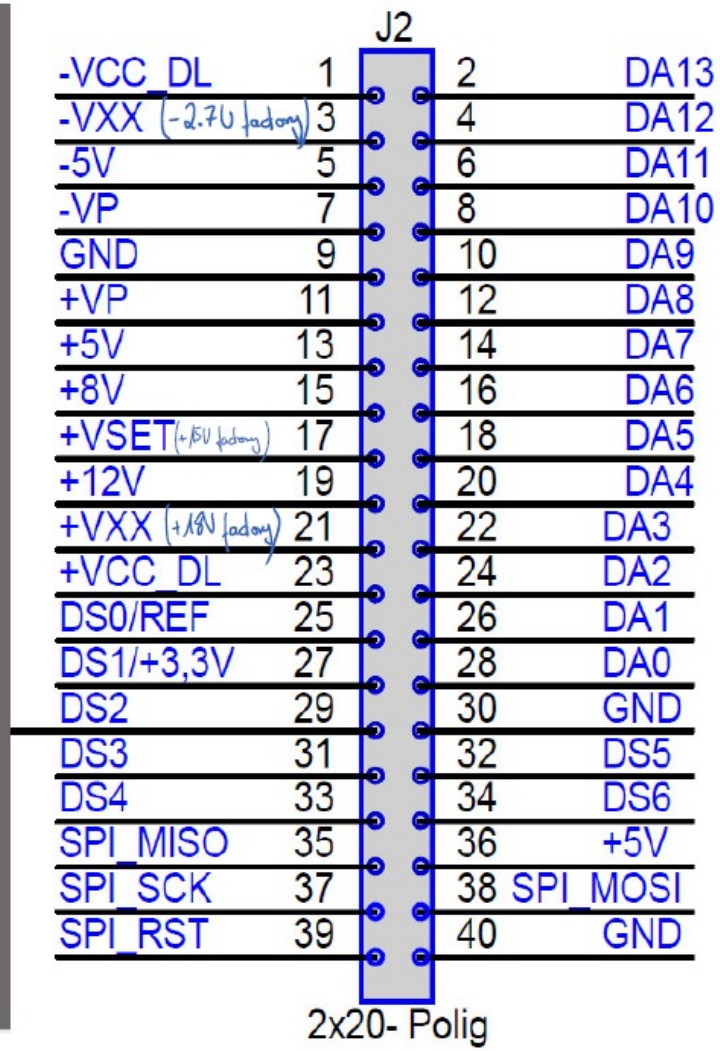

e-lego unit

Photodiode
VV67 (Transimpedance Ampl.) + SU 800 (Buffer Amplifier)

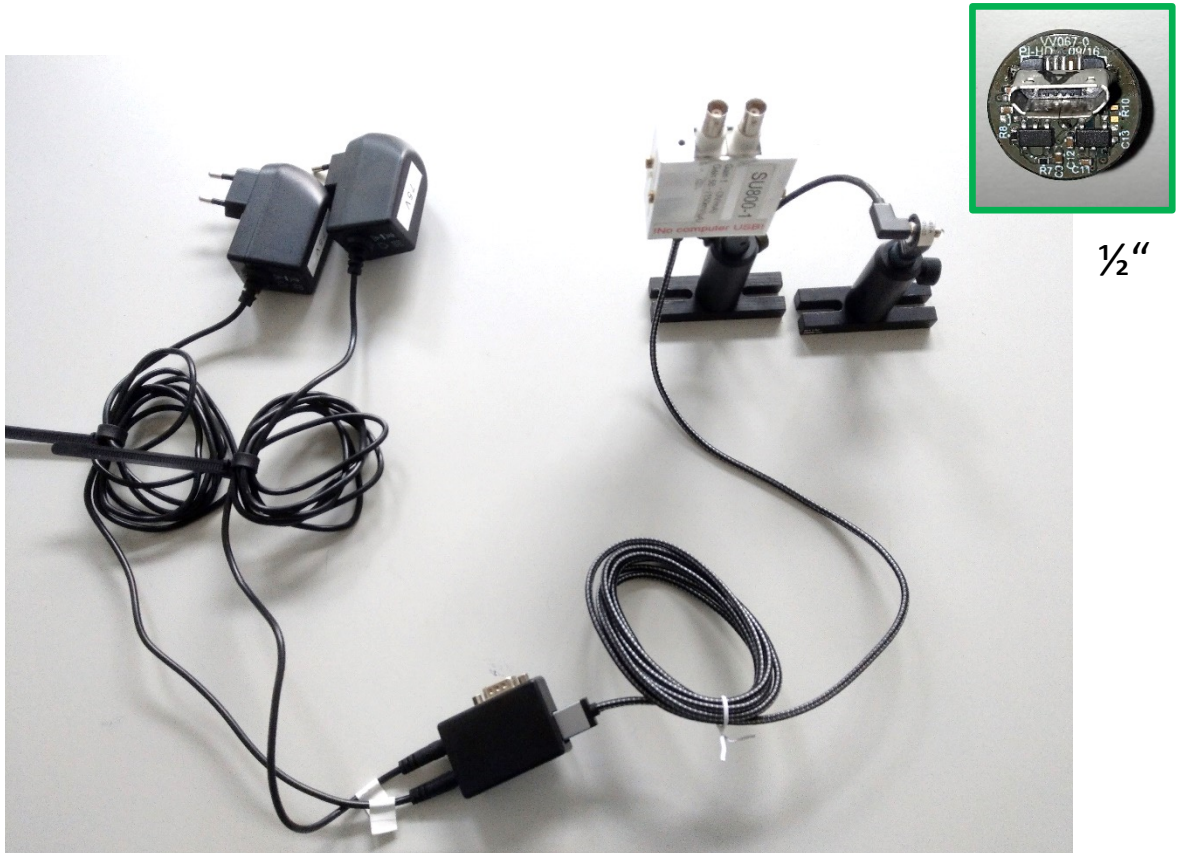

½“

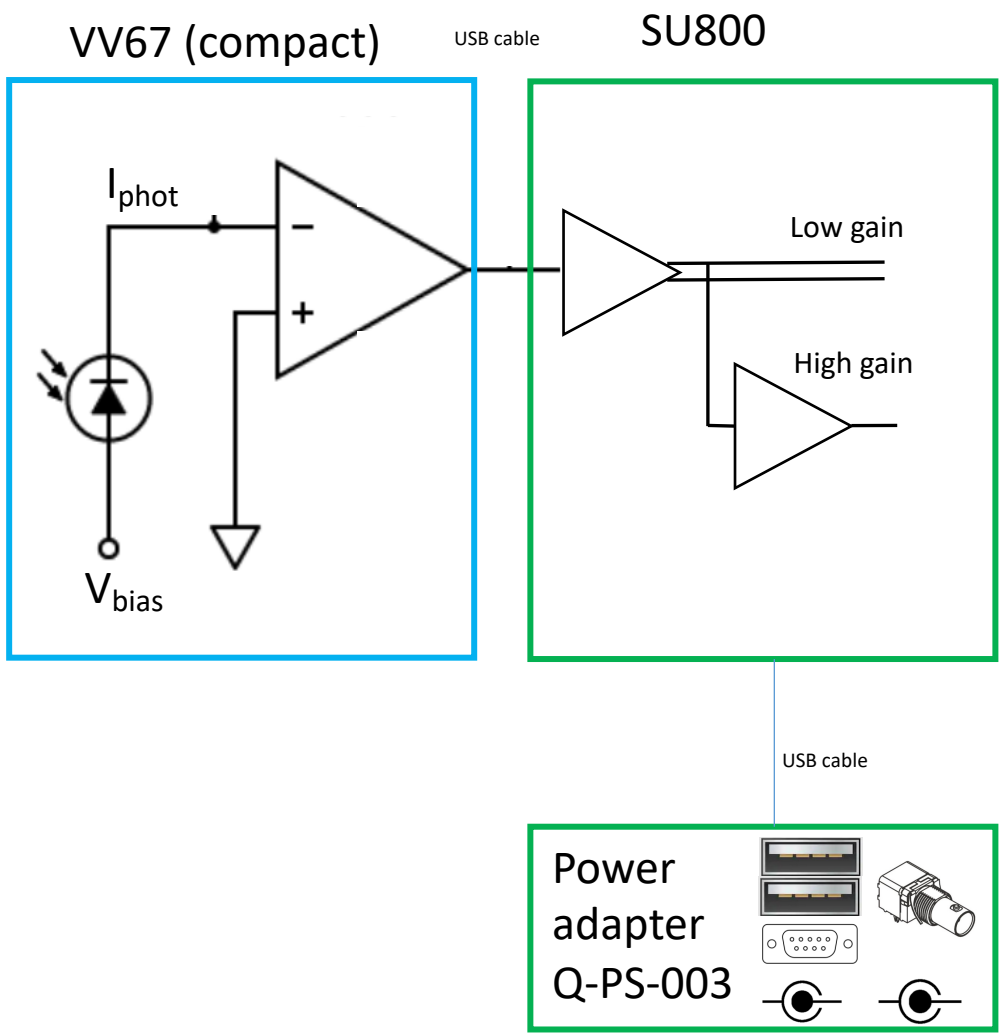

- **Ultra compact** (VV67 - SM05 Thorlabs mount)
- **Bandwidth DC up to 150 MHZ**
- **Two outputs** with a low gain (x1) and high gain (x50)
- Sensitivity: **3V/mA** (low gain) - **150mV / µA** (high gain)
- Output range **+/- 5V**
- **Fully differenctial** output (@ low gain port)
- **50 Ohm termination** possible (and should be at frequencies above ~ 1 Mhz)
- Noise floor: **down to - 140dBm/Hz → Noise Equivalent Power = 8 pW/ sqrt(Hz)**
- Different Diodes available: **Si, InGaAs. Different Sensor sizes**

\\147.142.16.140\geraete\Geraete\VV\VV067_Fotodiodenverstärker 0,5-Zoll

\\147.142.16.140\geraete\Geraete\SU\SU800_Dual_Channel_Photodiode_Buffer\SU800-1

\\147.142.16.140\microcontroller\QD-Ultracold\Q-PS - Power Supplies and Voltage sources\Q-PS003 USB Power Adapter for eLego

Overview of Components for e-lego Photodiode

SU800
Buffer Amplifier

Short USB cable

VV67 ½“ PD board

2 x 7.5V PS

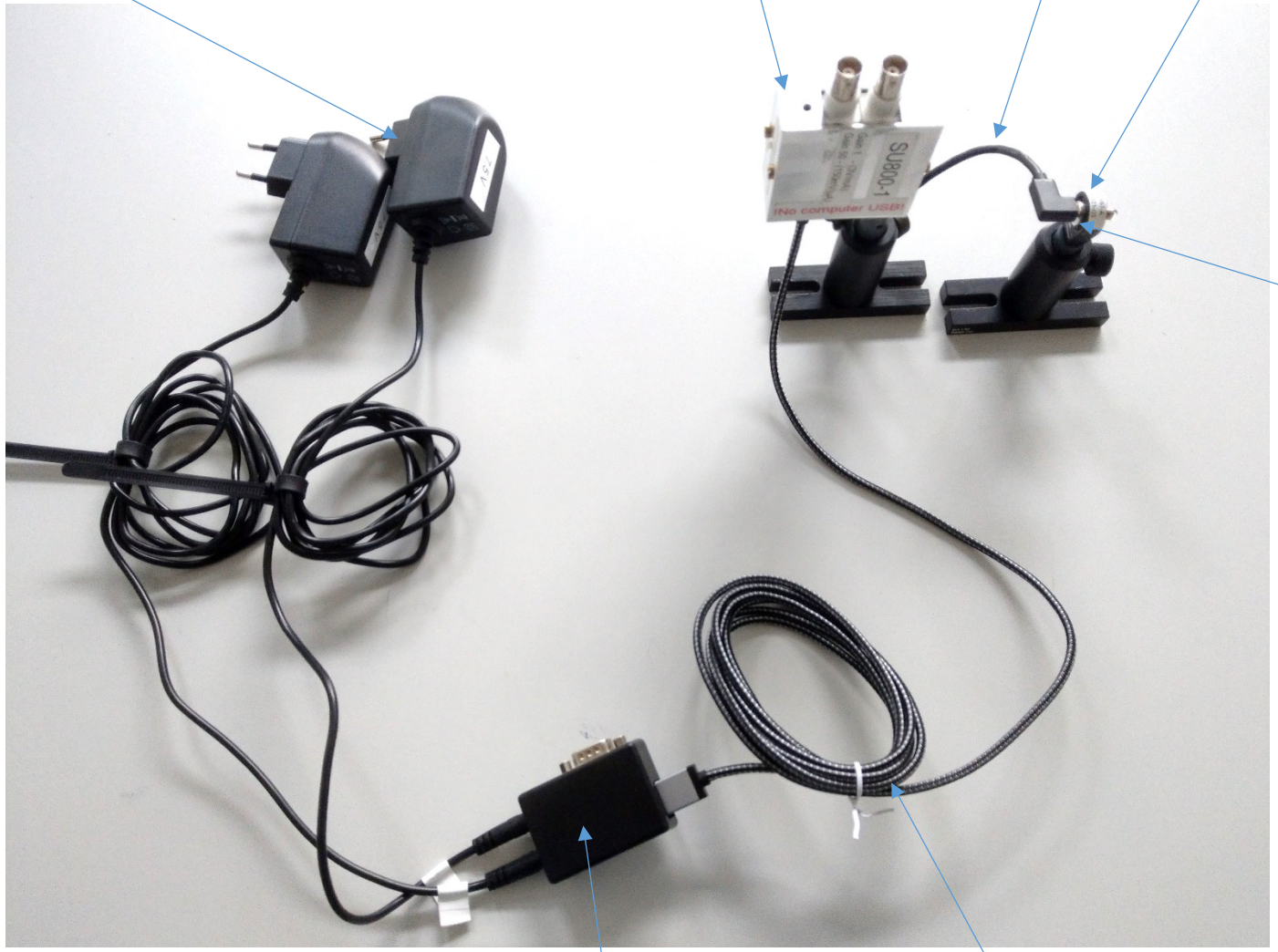

Recommended supplies:
Neg: 7.5V
Pos: 7.5V

Shearing protecting SM05

USB Power Adapter
Q-PS003

Long USB cable. Only use USB cable with shielding ground connected to plugs and labelled: „Connection of shielding ground tested „

e-lego Photodiode – different Sensors

HAMAMATSU
PHOTON IS OUR BUSINESS

No	Type	Model	Area Dia mm	Capacity pF @ 4V bias	Dark current nA @ 4V bias	Sensitivity at 1064 A/W	Cap-taped	Application	Link	Lithium	Rydberg	Order PI	VV067 Version
1	Si PIN	S5972	0.8	3	0.01	~ 0.05 not in datasheet (extrapolated)	Manu SPL	**VIS: Large Sensor** **high speed (500 Mhz)** **flat up to 150 MHz** **comfortable alignement**	https://www.hamamatsu.com/us/en/product/type/S5972/index.html	6	4	**6 canned(ohne Deckel)** **4** **regular**	A
5	Si PIN	S9055-01	0.1	0.5	0.002	~ 0.01 Read from datasheet - out of specified range	Manu	**VIS - high speed (> 1 GHz)** **flat response characteristics up to high frequency bands** **Small sensor (100µm)**	https://www.hamamatsu.com/jp/en/product/type/S9055-01/index.html	1	1	**2**	A
6	Si PIN	S5821-03	1.2 (+lens)	5	0.025	0.2	no	**With Plastic lens.** **Visable / Near IR - low speed monitoring (interlock)** **(flat up to 4 Mhz)**	https://www.hamamatsu.com/jp/en/product/type/S5821-03/index.html	2	3	**5**	A
7	InGaAs	G12180-003A Replaces 8376	0.3	5	0.1	0.6 Spectral transmittance of window: 91 %	Manu SPL	**NIR small capacity (high speed)** **3dB cutoff: 600 Mhz**	https://www.hamamatsu.com/us/en/product/type/G12180-003A/index.html		2	**2**	B
8	InGaAs	G12180-005A Replaces 8376	0.5	15	0.2	0.6 Spectral transmittance of window: 91 %	yes	**NIR large sensor size** **3dB cutoff: 600 Mhz** **comfortable alignment**	https://www.hamamatsu.com/eu/en/product/type/G12180-005A/index.html	4	2	**6** **Leave cover for later removal**	C

Bandwidth e-lego Photodiode

VV67 (Transimpedance Ampl.) + SU 800 (Buffer Amplifier)

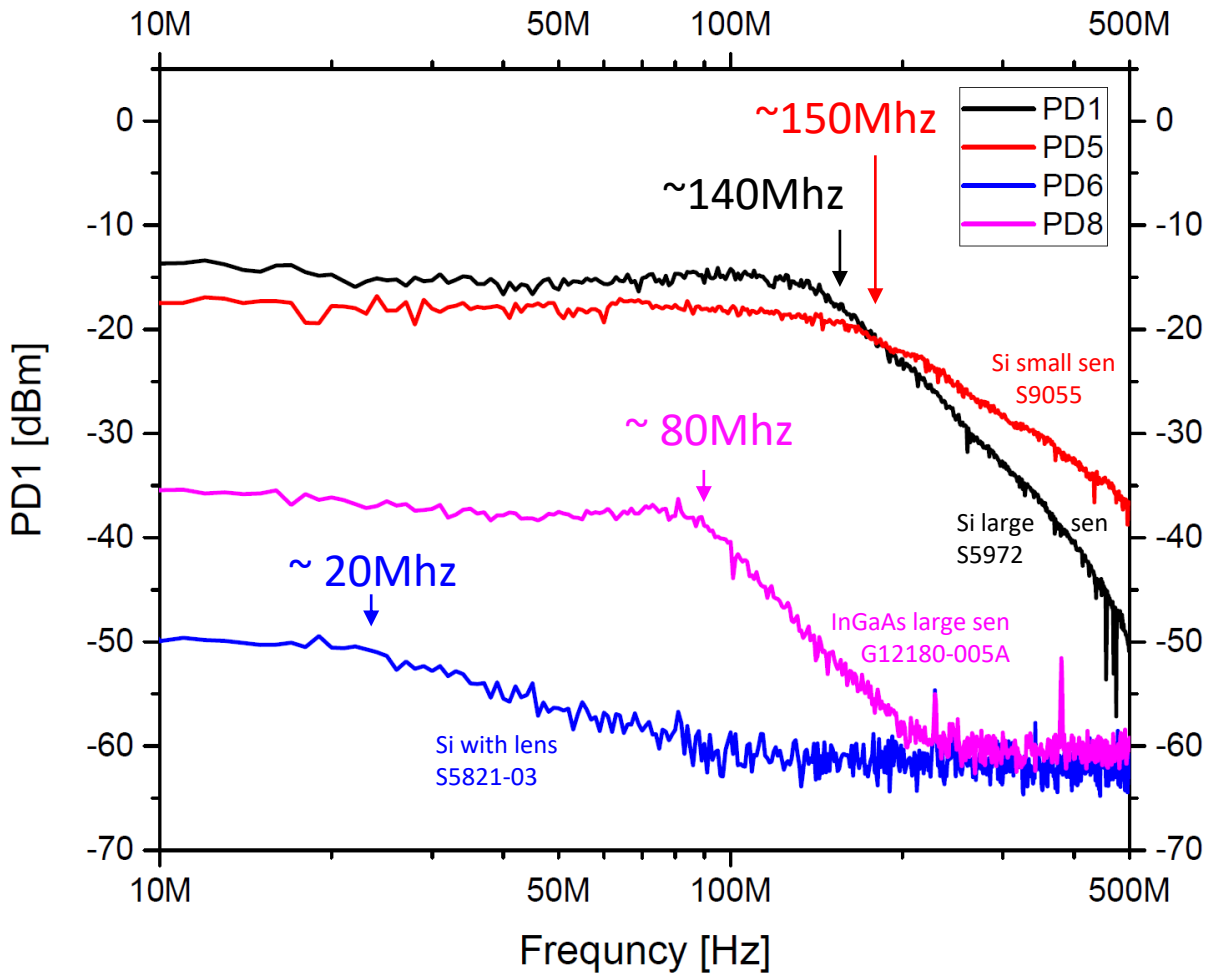

No	Type	Model	Area Dia mm
1	Si PIN	S5972	0.8
5	Si PIN	S9055-01	0.1
6	Si PIN	S5821-03	1.2 (+lens)
7	InGaAs	G12180-003A Replaces 8376	0.3
8	InGaAs	G12180-005A Replaces 8376	0.5

SU 800 Differential Amplifier and Buffer Amplifier for Photodiode

e-lego module

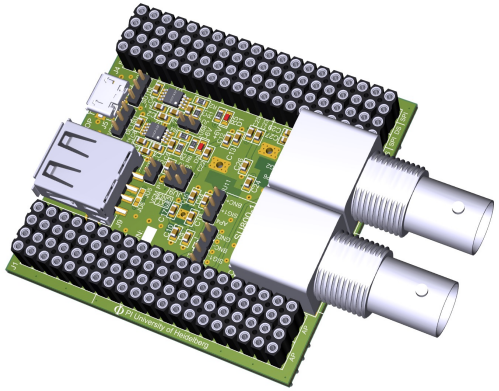

Transfer function

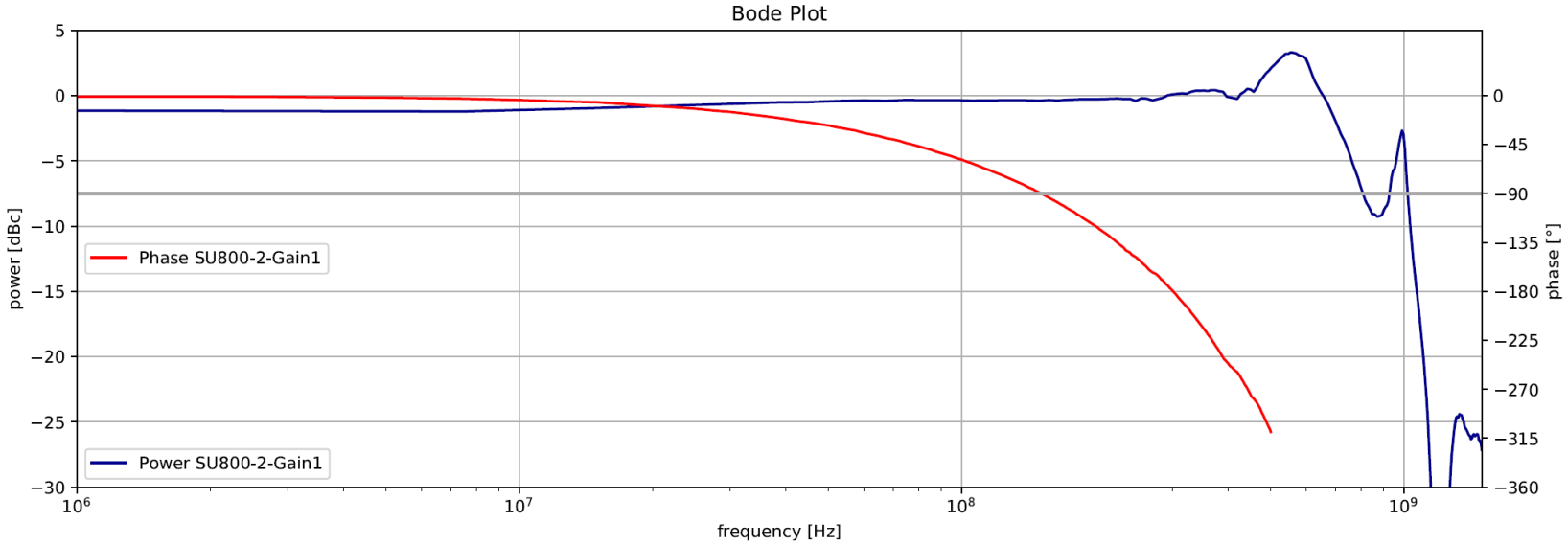

BW: 90° Phase shift: 150 MHz
- 3dB Gain: 600 MHz

PSD: -140 dBm / Hz

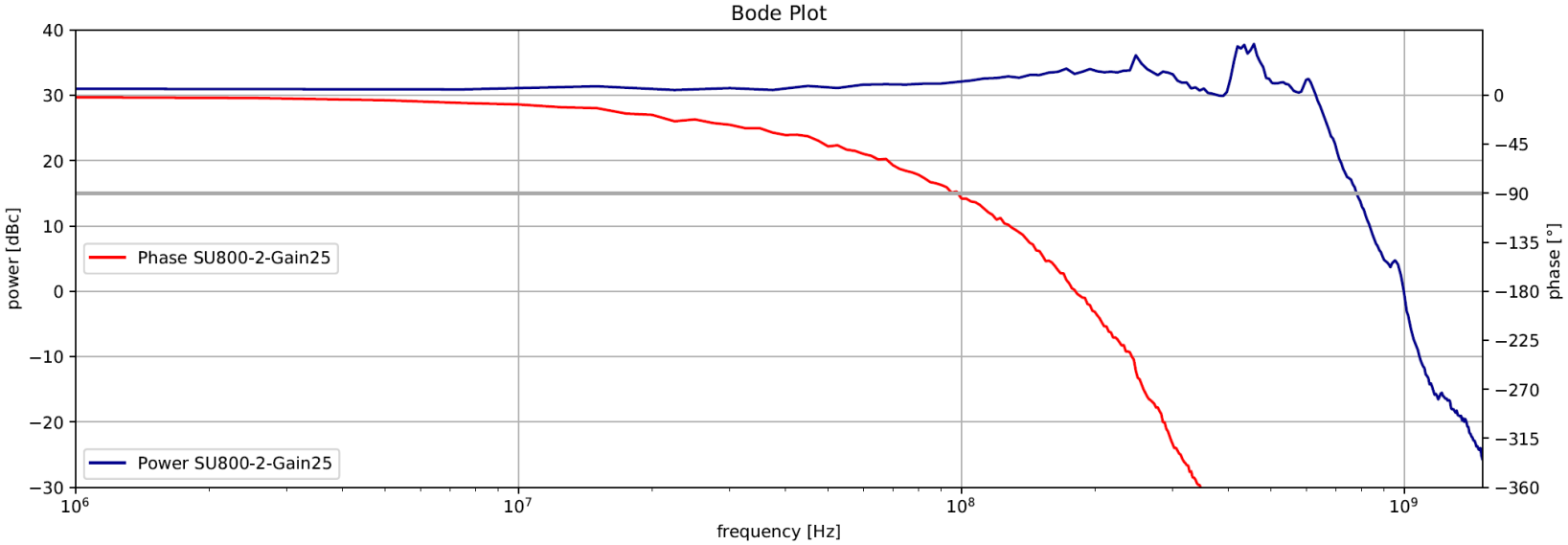

Comparison e-lego Power Spectral Density – different Sensors – different Gain

Comparison between different Gains

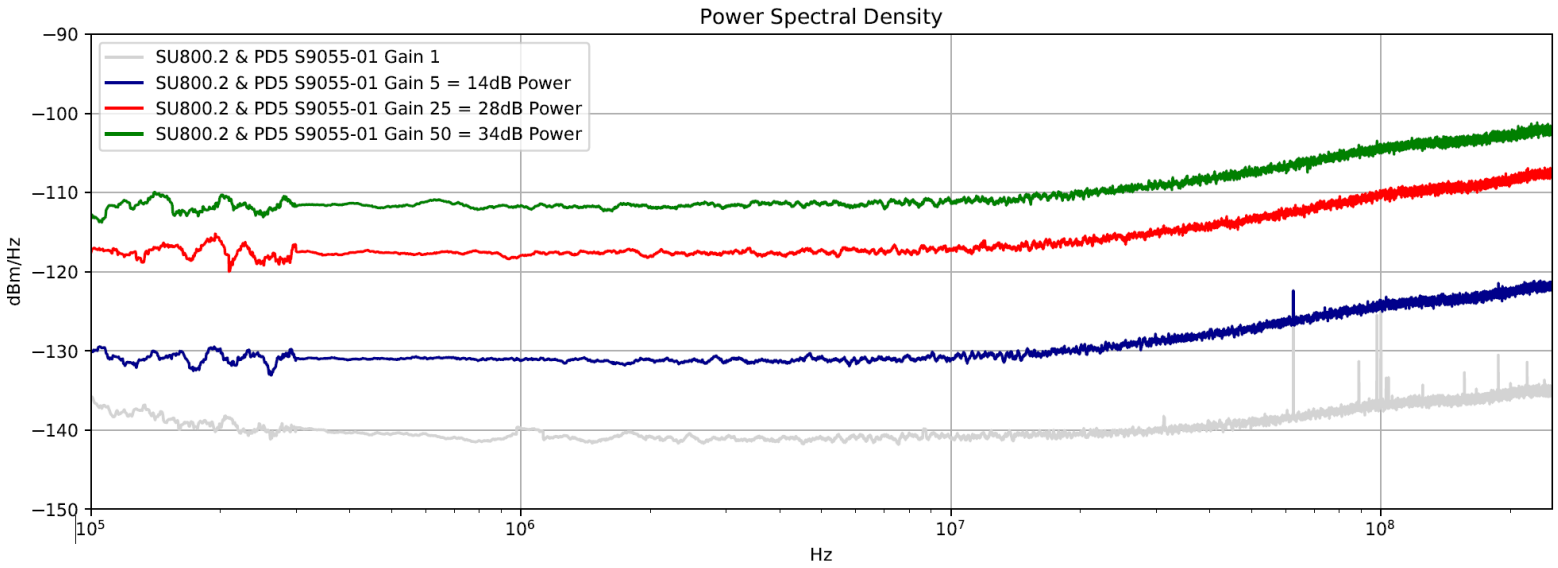

Comparison between different Sensors

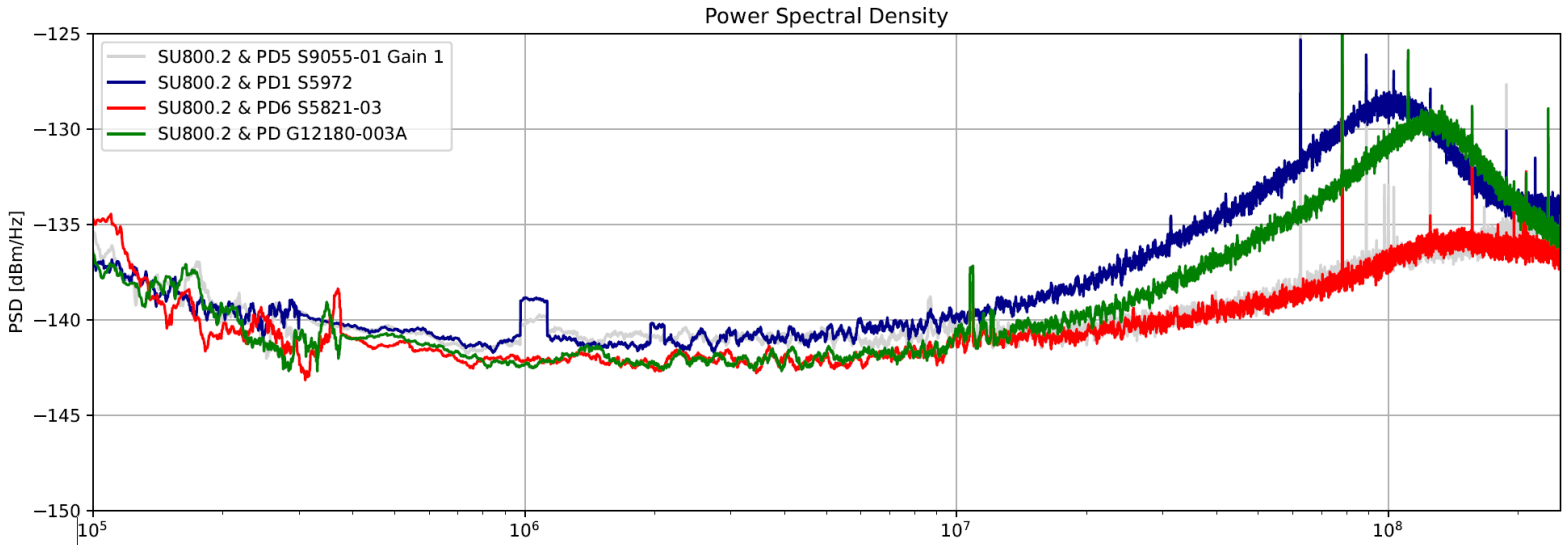

Comparison Power Spectral Density - e-lego and Thorlabs Photodiode – VIS Range

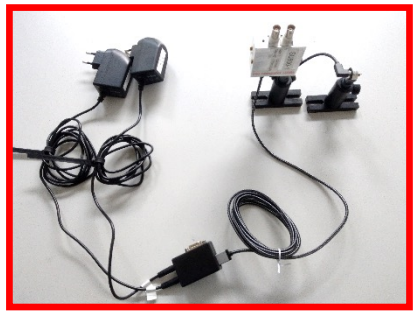

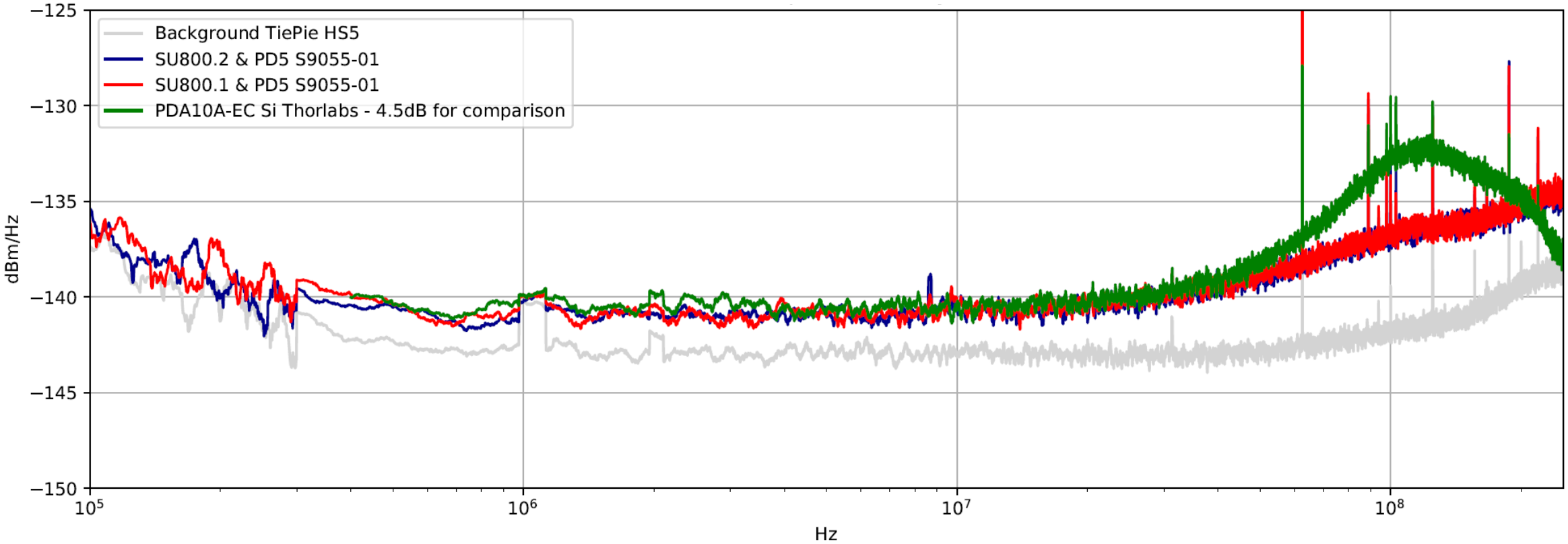

Noise Equivalent Power = 8 pW/ sqrt(Hz)

Noise Equivalent Power =NSD / Gain / Sensitivity = (50*1e-3 W/mW *10^(1/10*(-140 [dBm/Hz])))^(1/2)/3000 [V/A]/ 0.9 [A/W]

Comparison Power Spectral Density - e-lego and Thorlabs Photodiode – IR Range

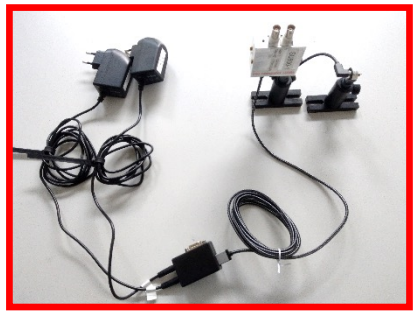

e-lego
(3kV/A)

Hamamtsu **InGaAs** G12180-005A (dia: 0.5mm)
+ VV67 Transimpedance Amplifier
+ SU800-1 Buffer Amplifier

Thorlabs
(5kV/A)
(→ 4.5 dB higher gain)

PDA10CF (dia: 0.5mm)

https://www.thorlabs.com/thorproduct.cfm?partnumber=PDA10CF&pn=PDA10CF#11795

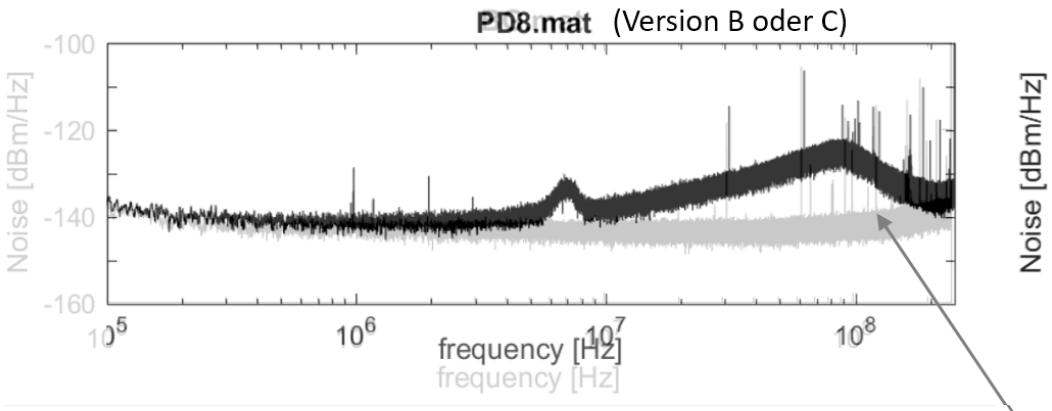

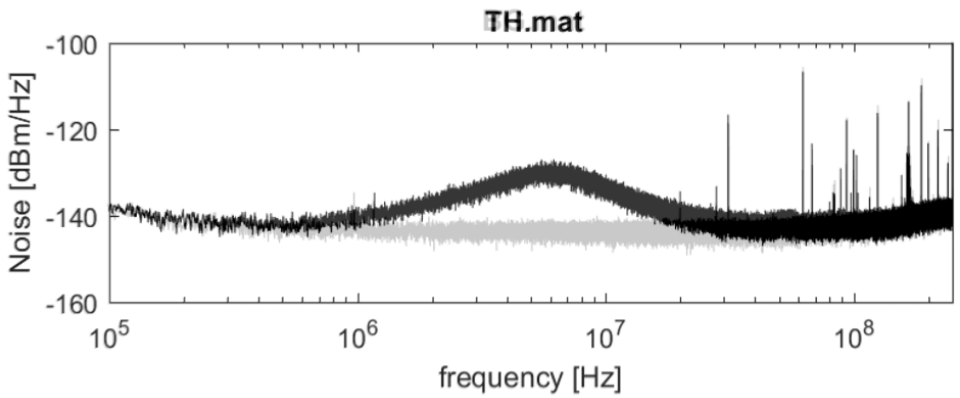

light grey: noise of measurement device (TiePie HS 5)

List of Components for e-lego Photodiode

legend: blue: to be ordered from inhouse electronic workshop
black: to be order at Conrad, Hamamatsu and Amazon
orange: to be ordered from inhouse mechanical workshop

1. Power Supply: 2 x Wallplug supplies 7.5V: Dehner SYS1308-1808-W2E
2. Power-to-**USB- Adapter: Q-PS003-1** → Version: **V2: Hohlstecker, V3: Sub-D connector + Hohlstecker**
3. USB cable to buffer-amplifier

(Red Amazon cables only or others that fullfill the cable requirements)

4a Buffer amplifier board **SU-800**
4b Case for Buffer amplifier board:
4c Bottom and Top-lid for Amplifier board:
4d M3 Screws to fix the PCB and the lid

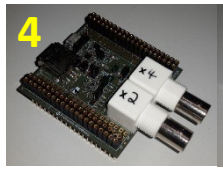

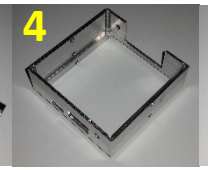

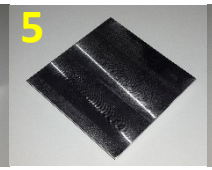

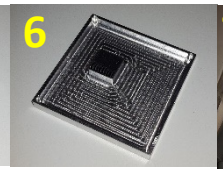

→ Can be assembled in the electronic workshop. Specify if you like to have connector pin-rows for modular extension. Specify if you like to have power status LED's on the board.

5. Connection cable for Photodiode PCB **(Red Amazon cables only or others that fullfill the cable requirements)**

6a Photodiode (see list of Photodiodes)
6b Photodiode PCB (**1/2" - VV067**

Standard: **With connector rows, pins cut. No LEDS**

→ Select photodiode. Make sure feedback capacity is chosen accordingly. Specify if you like to have power status LED's on the board

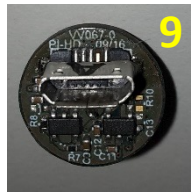

7. Mount for Photodiode PCB (Thorlabs SM tube – LMR05/M) Standard: **No LEDS**
8. Shearing protecting SM05 - PD-USB for VV67 to protect against torque from the USB cable
9. Plastic Post to mount the Photodiode tube (to avoid ground loops with the table) and to mout the Amplifier Box.

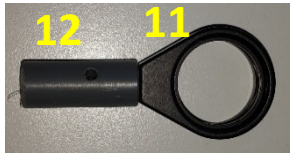

\\147.142.16.140\geraete\Geraete\SU\SU800_Dual_Channel_Photodiode_Buffer\SU800-1
\\147.142.16.140\geraete\Geraete\VV\VV067_Fotodiodenverstärker 0,5-Zoll
\\147.142.16.140\microcontroller\QD-Ultracold\Q-PS - Power Supplies and Voltage sources\Q-PS003 USB Power Adapter for eLego

USB cable requirements

1) **Make sure the shealding, i.e. the metal frames of the USB plugs are connected with each other.** Otherwise there is no supply-ground for the PD boards.

2) **Make sure the shielding is NOT connected to the ground.** Otherwise the supply-ground for the PD boards is short to the negative supply

→ **Red Amazon cables „amazon**basics“ **fullfill these requirements**

https://www.amazon.de/AmazonBasics-USB-2-0-Micro-B-Kabel-doppelt-geflochtenem/dp/B074VN65YC/ref=sr_1_1?s=computers&ie=UTF8&qid=1542625684&sr=1-1&keywords=B074VN744l&th=1

AmazonBasics - USB-2.0-A auf Micro-B-Kabel mit doppelt geflochtenem Nylon | 0,3 m, Rot

B074VN744l

Alternative 1.8m

https://www.amazon.de/gp/product/B00AGHYNVY/ref=oh_aui_detailpage_o06_s01?ie=UTF8&psc=1

ROLINE GOLD USB 2.0 Kabel I Typ AB Stecker I Micro USB-Kabel I 1,8 m

→ **if you like to use another cable, first test if the two requirements are fullfilled**

→ **You can use the USB-cable tester stored in the USB cable project Box**

Shearing protecting for USB Connecter of VV67 Photodiode

SM05 – PD-USB Spacer

Modified Thorlabs tool SPW603
https://www.thorlabs.com/thorproduct.cfm?partnumber=SPW603
to fix retaining ring (larger inner diameter such that USB connector fits in). Modification: inner diamter: 10.5 mm, depth: 8 mm

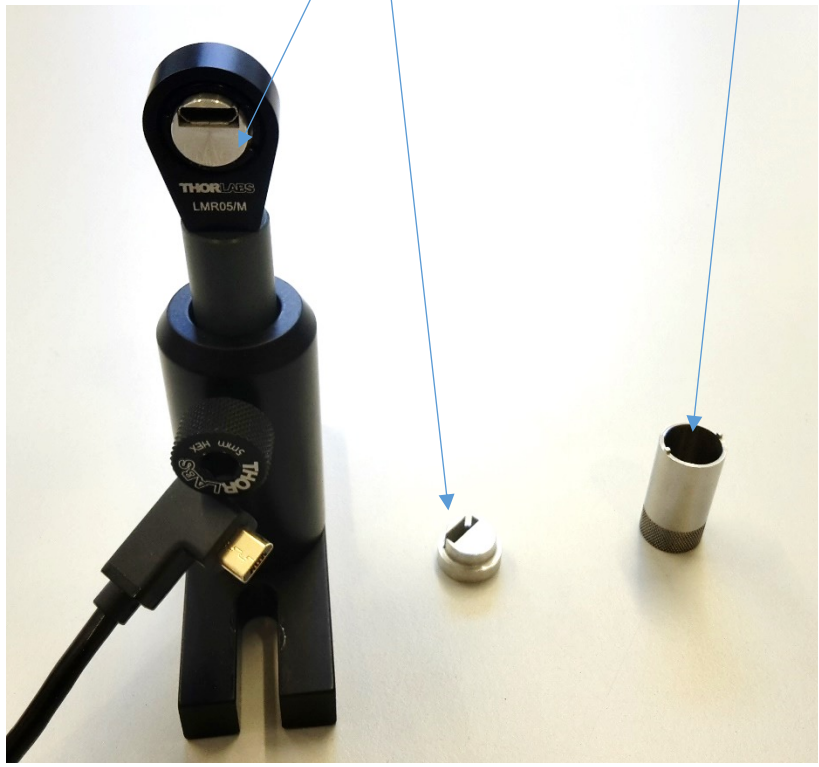

PD-USB-Spacer for e-lego VV67 Phtotodiode

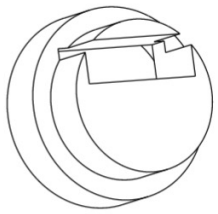

Isometrische Ansicht
Maßstab: 5:1

Workshop-No:
3012 (11.04.2018)
3096 (03.09.2018)
4253 (01/2024)

Material: Al

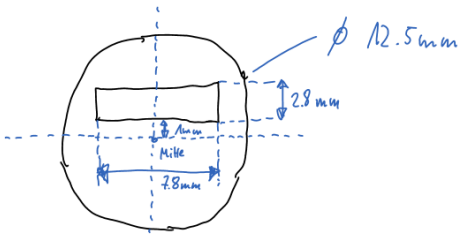

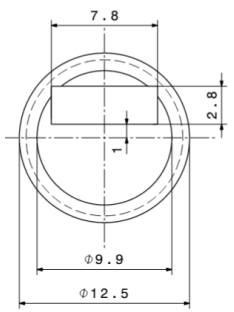

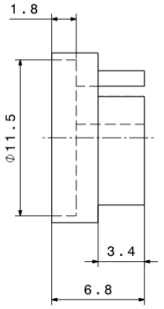

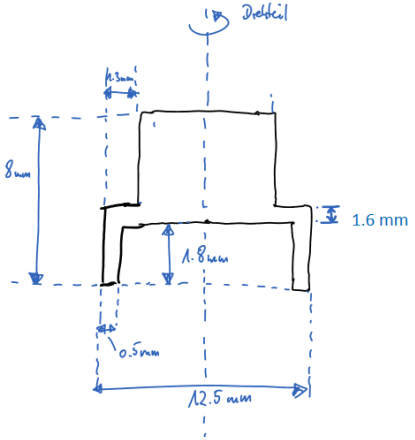

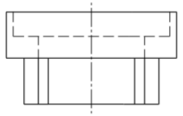

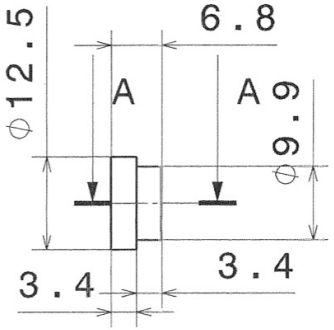

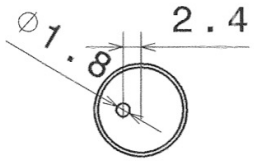

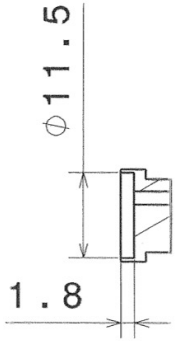

Jumper settings SU800-1

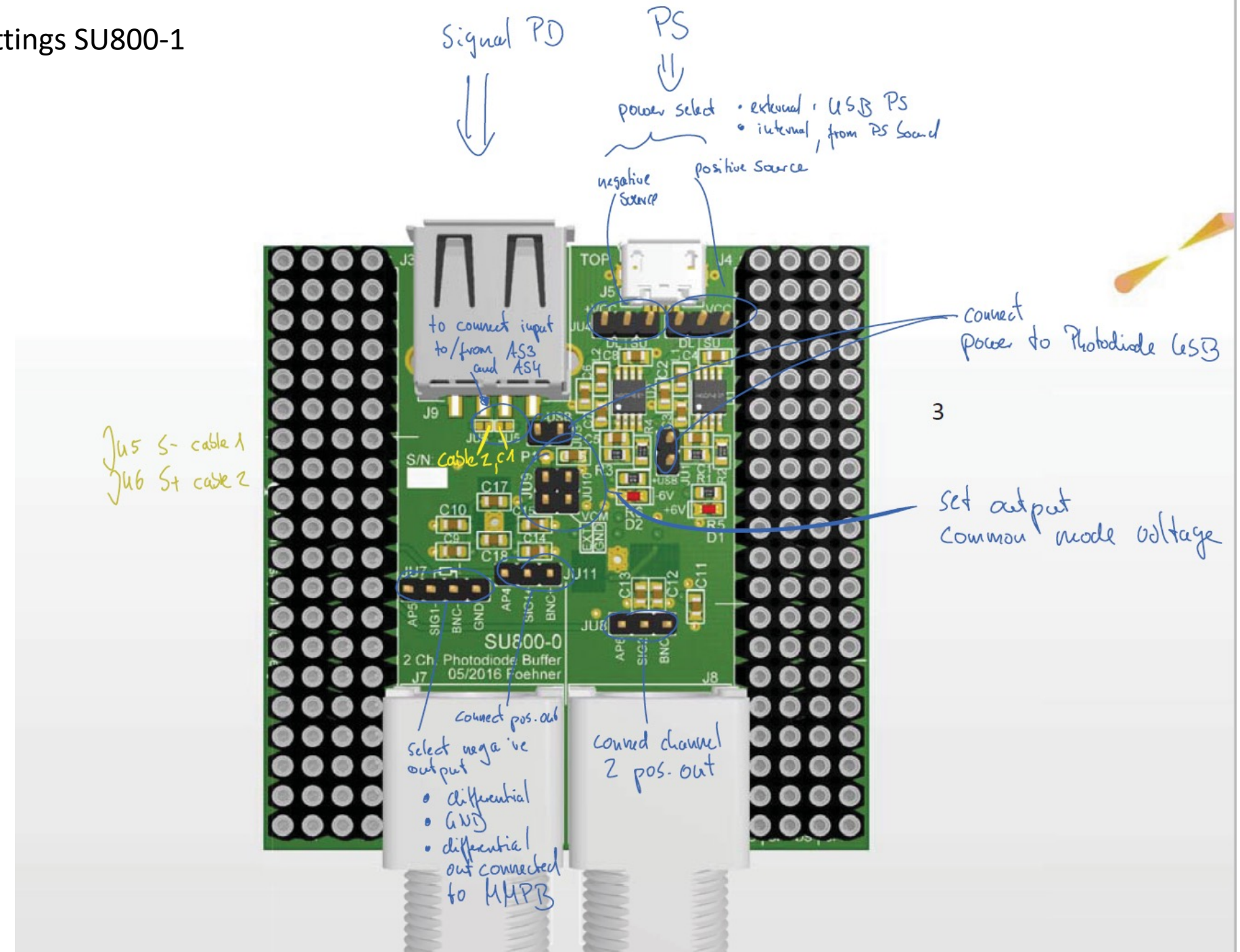

Jumper settings SU800-2

green: standart jumper setting

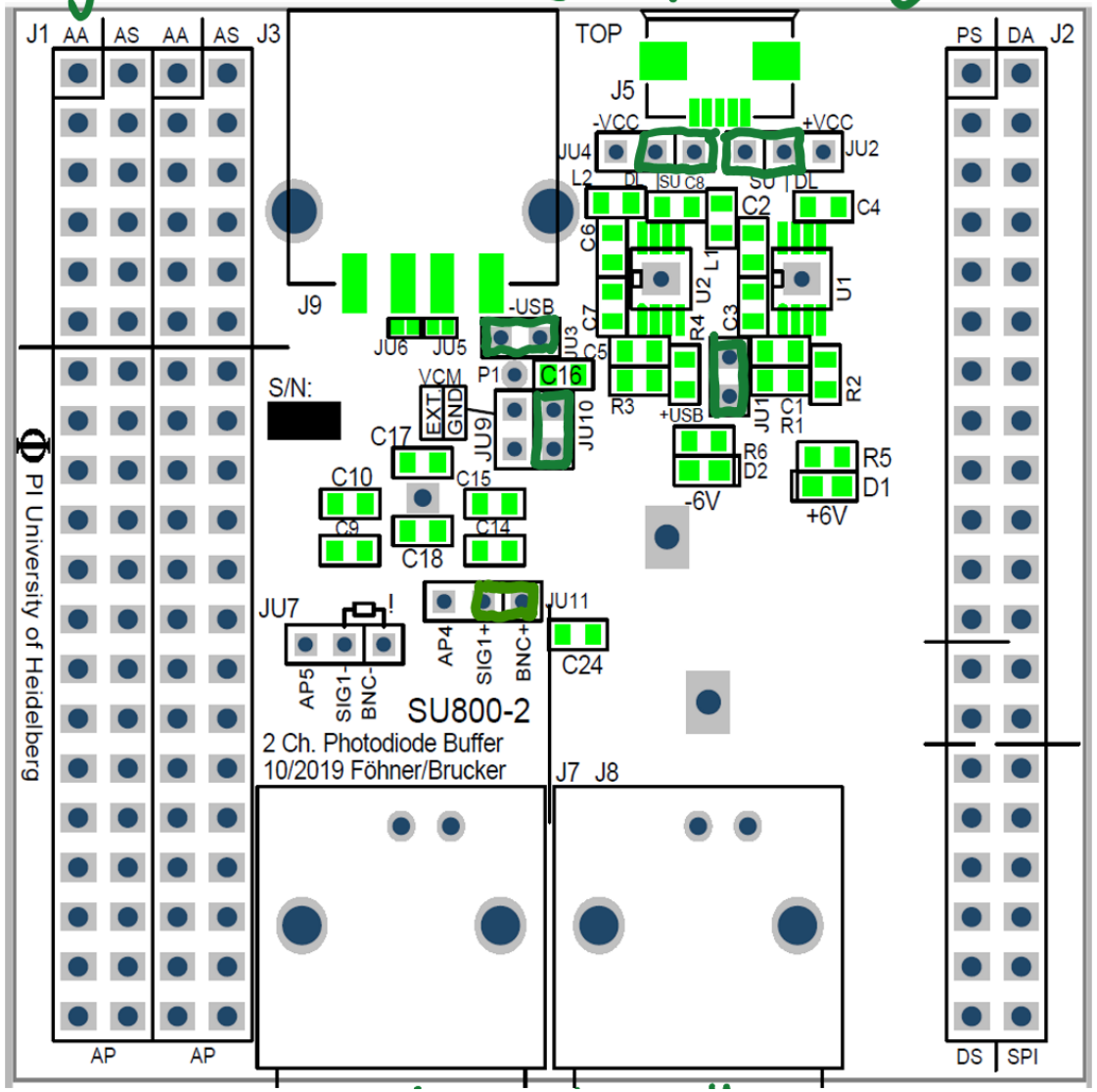

green: standart setting

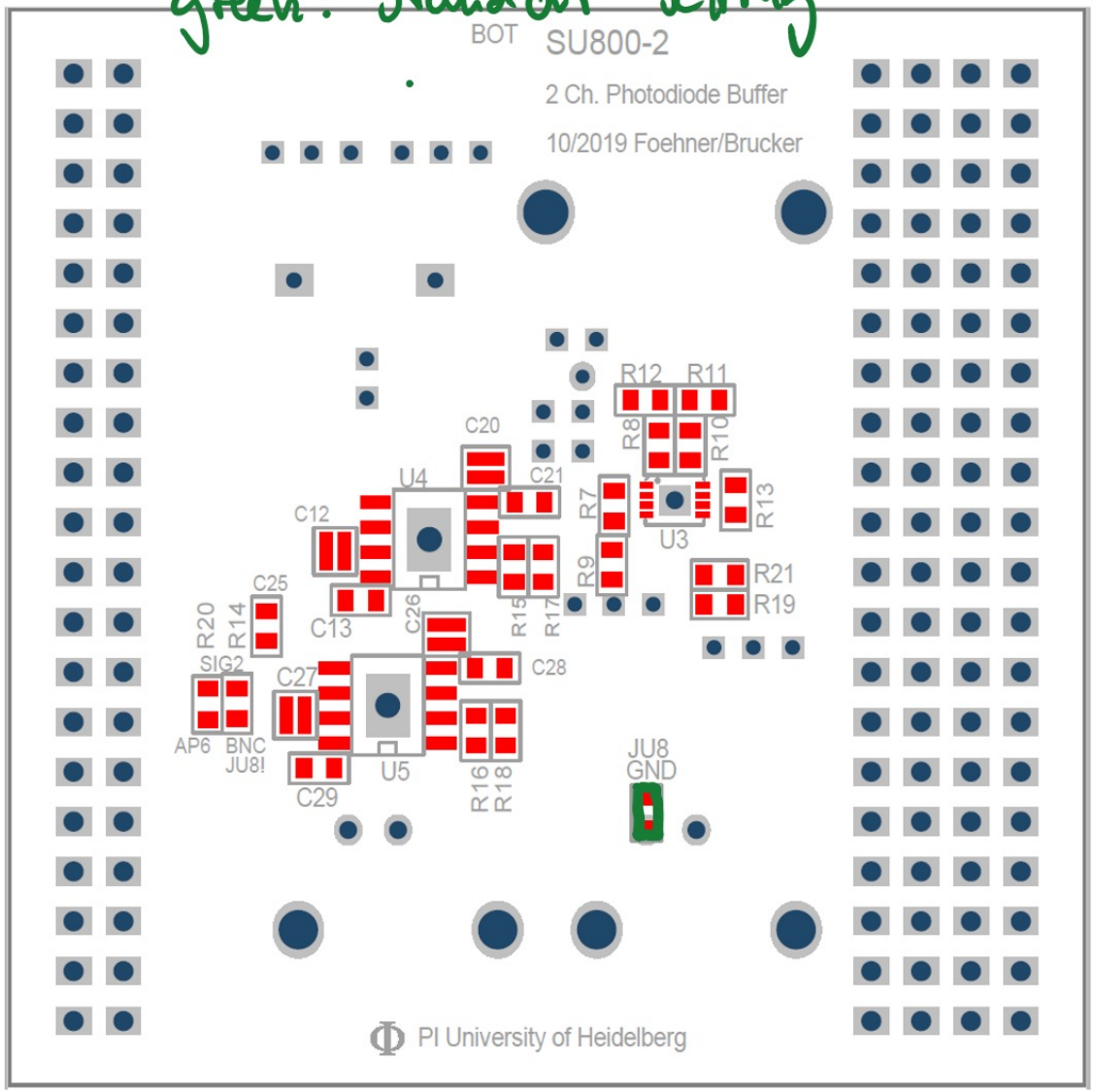

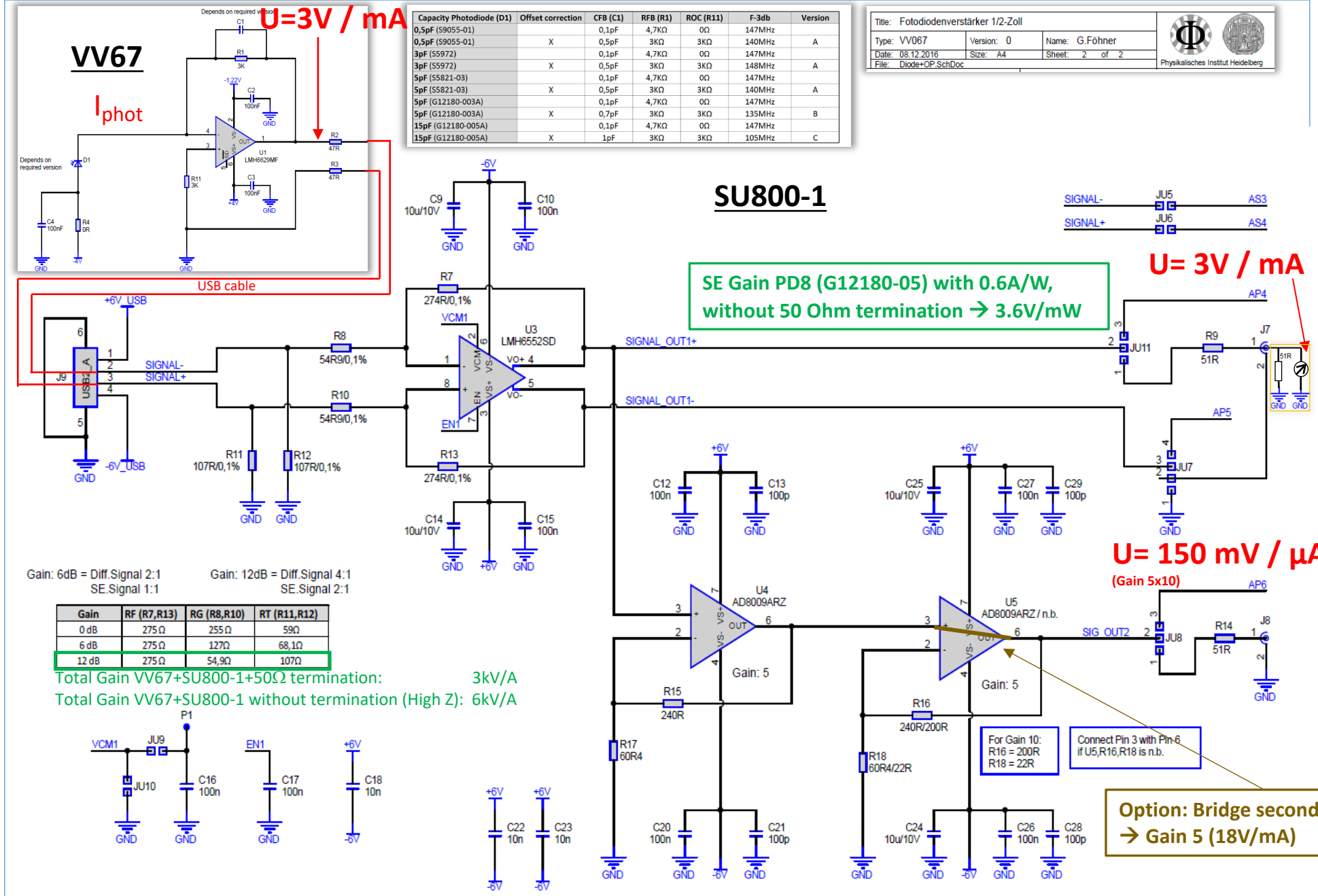

Capacity Photodiode (D1)	Offset correction	CFB (C1)	RFB (R1)	ROC (R11)	F-3db	Version
0,5pF (S9055-01)		0,1pF	4,7KΩ	0Ω	147MHz	
0,5pF (S9055-01)	X	0,5pF	3KΩ	3KΩ	140MHz	A
3pF (S5972)		0,1pF	4,7KΩ	0Ω	147MHz	
3pF (S5972)	X	0,5pF	3KΩ	3KΩ	148MHz	A
5pF (S5821-03)		0,1pF	4,7KΩ	0Ω	147MHz	
5pF (S5821-03)	X	0,5pF	3KΩ	3KΩ	140MHz	A
5pF (G12180-003A)		0,1pF	4,7KΩ	0Ω	147MHz	
5pF (G12180-003A)	X	0,7pF	3KΩ	3KΩ	135MHz	B
15pF (G12180-005A)		0,1pF	4,7KΩ	0Ω	147MHz	
15pF (G12180-005A)	X	1pF	3KΩ	3KΩ	105MHz	C

Gain	RF (R7,R13)	RG (R8,R10)	RT (R11,R12)
0 dB	275Ω	255Ω	59Ω
6 dB	275Ω	127Ω	68,1Ω
12 dB	275Ω	54,9Ω	107Ω

Title: Fotodiodenverstärker 1/2-Zoll
Type: VV067 | Version: 0 | Name: G.Föhner
Date: 08.12.2016 | Size: A4 | Sheet: 2 of 2
File: Diode+OP.SchDoc
Physikalisches Institut Heidelberg

Title: Dual Channel Photodiode Buffer
Type: SU800 | Version: 1 | Name: G.Föhner
Date: 08.12.2016 | Size: A4 | Sheet: 2 of 3
File: SU800-1 Buffers.SchDoc
Physikalisches Institut Heidelberg

\VV\VV067_Fotodiodenverstärker 0,5-Zoll\Entwicklung\PDF
\SU\SU800_Dual_Channel_Photodiode_Buffer\SU800-1\Entwicklung\PDF

Determination of the maximum light intensity to put on the e-lego Photodidoe

Maximum output Voltage on e-lego amplifier: 4.5V
Channel 1: 3V/mA
→ Photocurrent 4.5/3 mA = 1.5mA

Sensitivity at *1064nm*: 0.55 A/W (G12180-005)
→ **Optical power: 2.7 mW**

InGaAs PIN photodiode G12180-005A

Spectral response

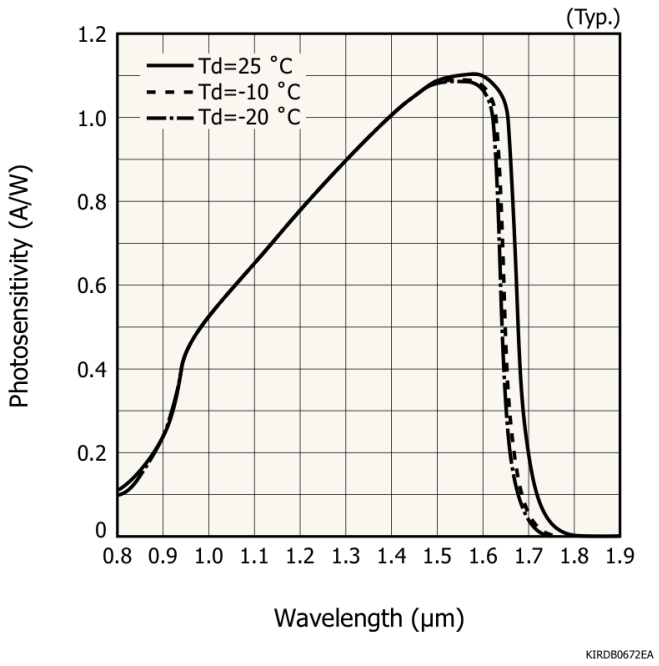

Linearity

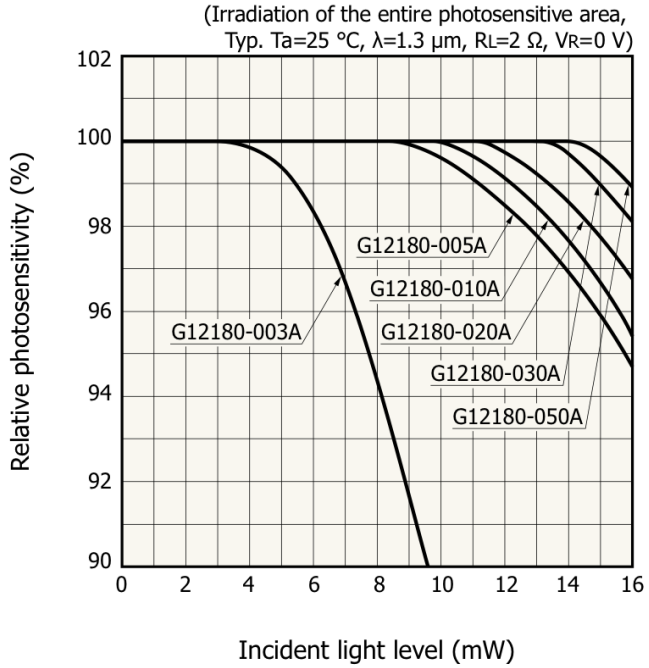

e-lego unit

e-lego Photodiode Fiber Mount

1) Machine off- fiber mounting plate

https://www.thorlabs.com/thorproduct.cfm?partnumber=S05FCA

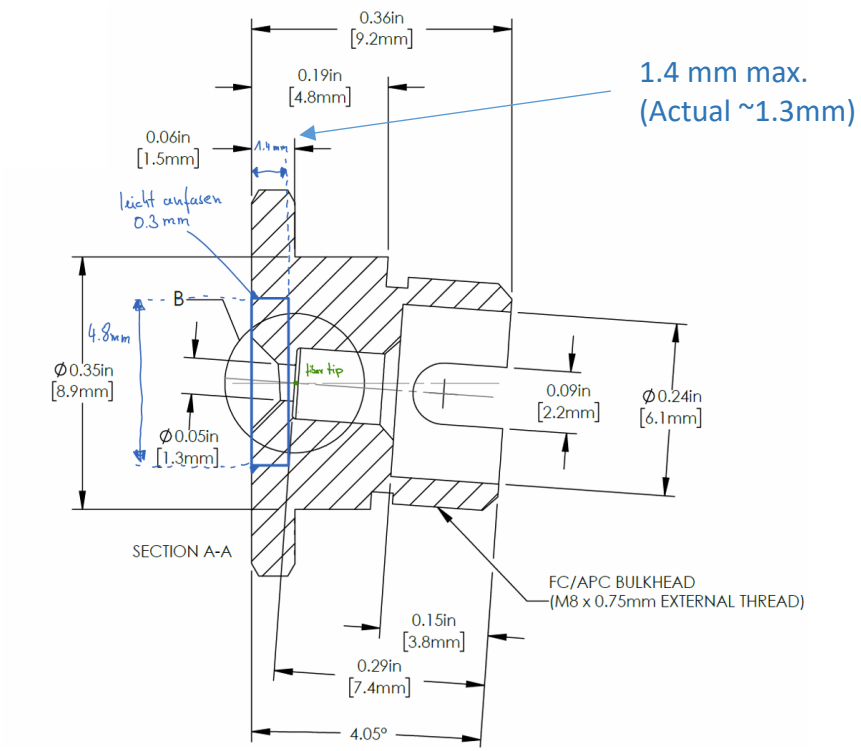

Package TO18

(1) S5971, S5972, S5973

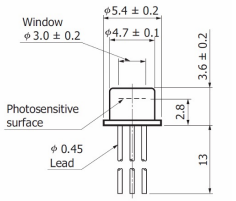

2) Mount into tube:

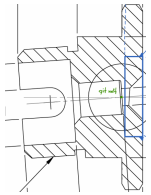

Machined S05FCA

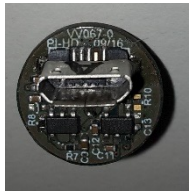

VV67

+

Shearing protecting

https://www.thorlabs.de/thorproduct.cfm?partnumber=SM05M05

3) Mount into tube:

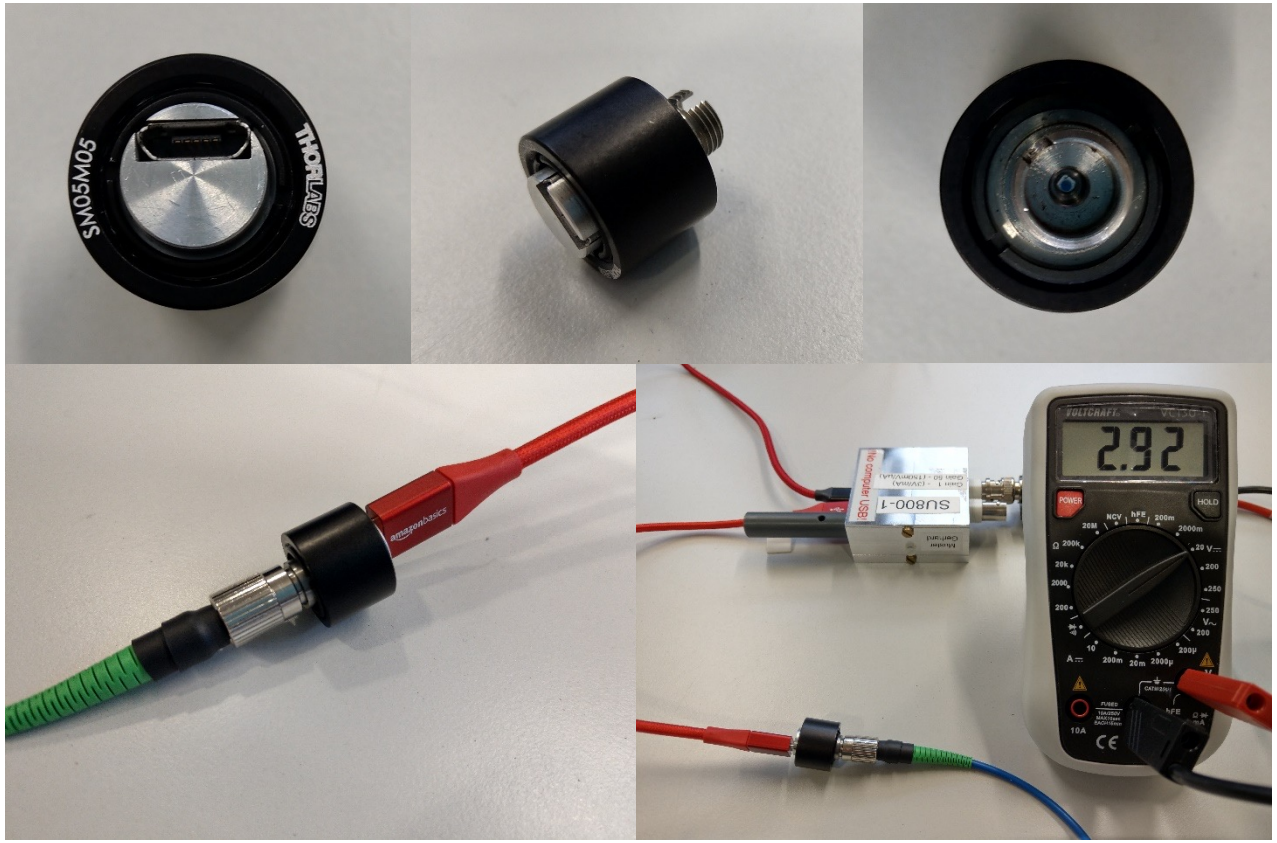

Production notes Photodiode System

Buffer amplifier boards SU800-2

Fix USB connector additionally with epoxy glues

No Power Status LED's on PCBs !

Label: Gain 1 - Gain 50
3V/mA - 150 mV/µA
Label: SU800-2
Label: !No computer USB!

Test a) positive and negative voltage supplies
Test b) RMS noise with no input (expected values ask Gunnar Föhner)
Test c) amplification of input signals

For fully enclosed boxes
Lower legs cut
Put into case with LID and Baseplate

Photodiode PCB's VV067

Use latest version (check with Gunnar)
No Power Status LED's on PCBs !
Photodiode sensors according the list of Photodiodes
Check the version (A,B,C). use correct settings for feedback resistors and capacitors (latest schematic of Gunnar föhner)
Solder Photodiodes directly to the board

Fix USB connector additionally with epoxy glues

Label the Photodiode around its can with its serial number

Test a) Measurement of Voltages (powered by amplifier board)
Measurement of RMS noise (osci settings and expected values ask Gunnar Föhner)
Test b) Measurement of Light (e.g. RED LED source) using amplifier board

SU800 Notes production

- Check for the latest production version and check for additional notes on the workshop server

- Add Polarity Protection: Pin 39: Top: Block pin with solder. Bottom: Cut pin

- Fix USB connector additionally with epoxy glues

- **For 2/3 of the boards, cut all bottom Pins and add a Boden-case and a Deckel-case**
  for the other 1/3, leave the bottom pins uncut.

- Set factory jumper settings

- Cut all bottom Pins (for 2 boards of the production batch leave the bottom pins uncut)

- Put PCBs into Aluminium case. Drawings of the cases can be found here:
  \\pi2\microcontroller\QD-Ultracold\Q-EI - e-lego\Cases and Heatsink
  Needed: Case PD Ampl. SU800 + Boden + Deckel

- Label the finished boxes on the Bodenplatte as shown

Gain 1	**-**	**Gain 50**	**SU800-2**	**!No computer USB!**
3V/mA	**-**	**150mV/µA**		

- Add some notes to the workshop server if there has been some modifications to the previous production version

- If not available yet, make pictures of the produced component an put them on the workshop server

- If not available yet, leave one module in the e-workshop Muster box and label it with „Muster E-Werkstatt“

Photodiode Order September 2019

Sensor	Version	Lithium	Rydberg	Total	Version A	Version B	Version C
S5972	A	5	10	15			
S5972 canned*	A	3	2	5			
S9055-01	A	3	2	5			
S5821-03	A	5	5	10			
G12180-003A	B	5		5			
G12180-005A	C		5	5			
G12180-005NA canned* with removable cover	C	10		10			

* canned: without cover glas

Number of VV67	31	24	**55**	35	5	15

		completly in case	withoud top and bottom lid and with bottom pins
Number of SU800 patched	**55**	45	10

Anfrage bei Hamamatsu vom 13.09.2019

Sehr geehrter Herr Iwotschkin,

vor 3 Jahren habe ich bereits Photodioden bei Ihnen bestellt (Angebot G56252)
Könnten Sie mir bitte ein neues Angebot für folgende PD's bestellen:

Sensor	Number of Photodiodes
S5972	25
S9055-01	7
S5821-03	15
G12180-003A	7
G12180-005A	7
G12180-005NA	12

Mit freundlichen Grüßen,
Gerhard Zürn

VV67+SU800 Photodiode Testing

- Check response to optical Signal

illuminate the Photodiode with an LED (e.g. the LED of a smartphone).

→ A signal of a couple of 100 mV is expected on the Gain 1 output (for the S5972 version)

- Check noise spectrum

No light on photodiode (set Osci to AC coupled)

→ Expected voltage noise: RMS about 0.3mV, about 2 mV Vpp (20 MHz BW limit)

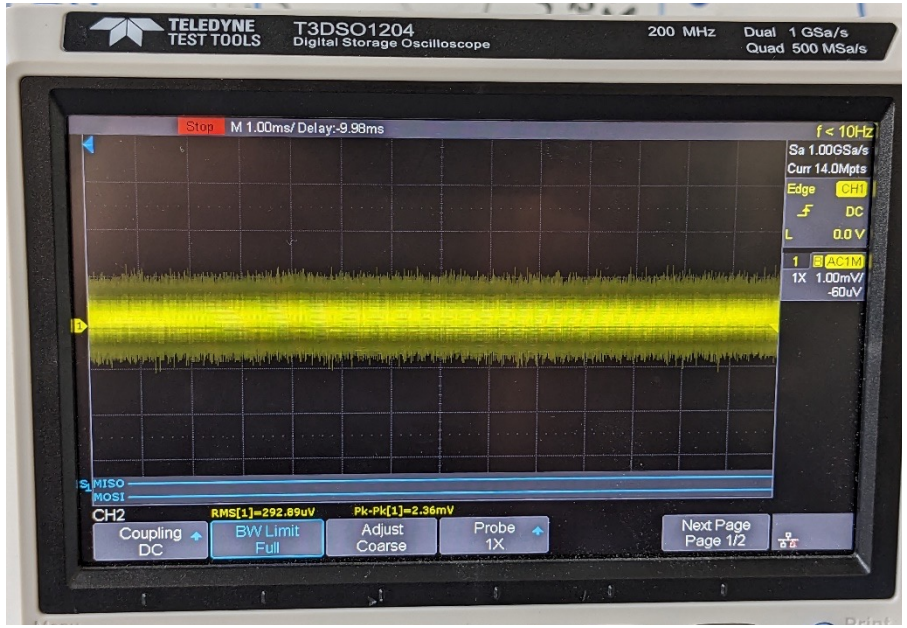

USB cable tester (based on SU806)

Green LED: Checks if the shielding ground is connected
Red LED: allerts if the shielding is connected to the USB GND

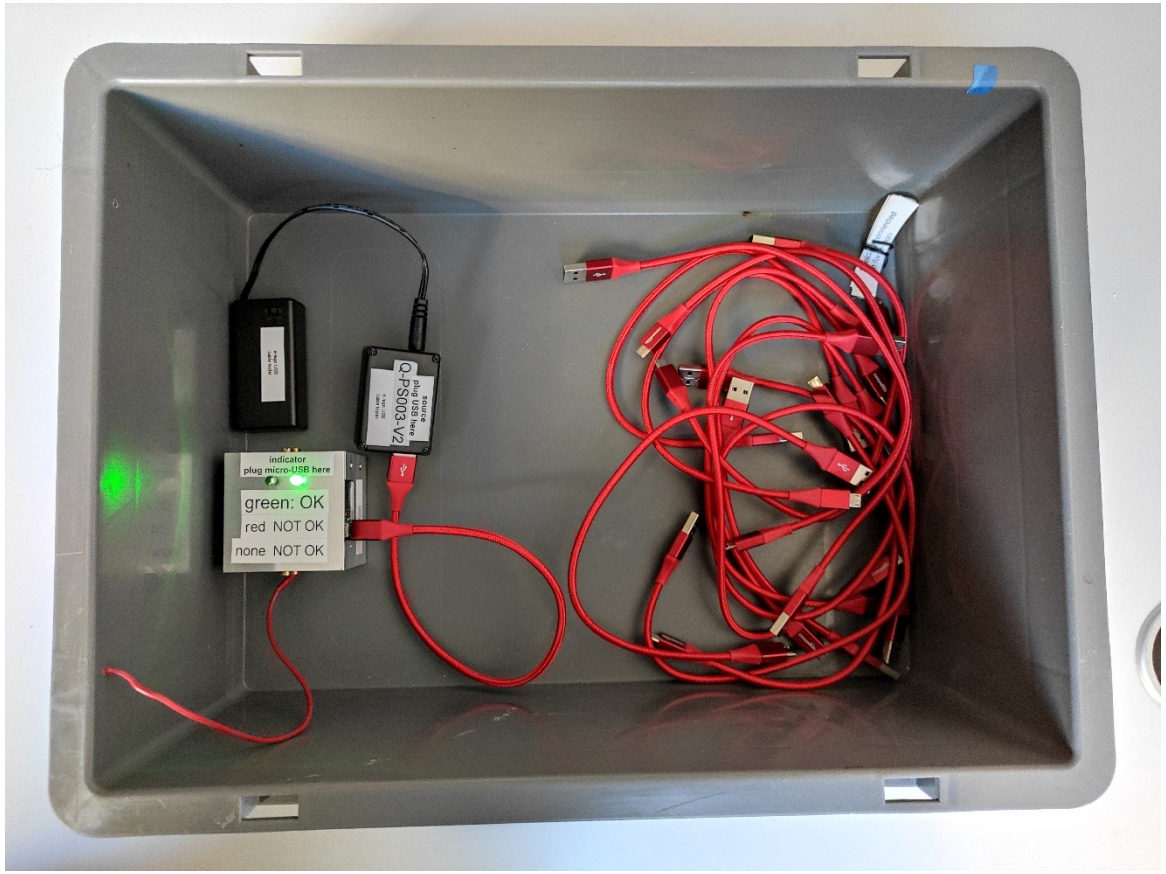

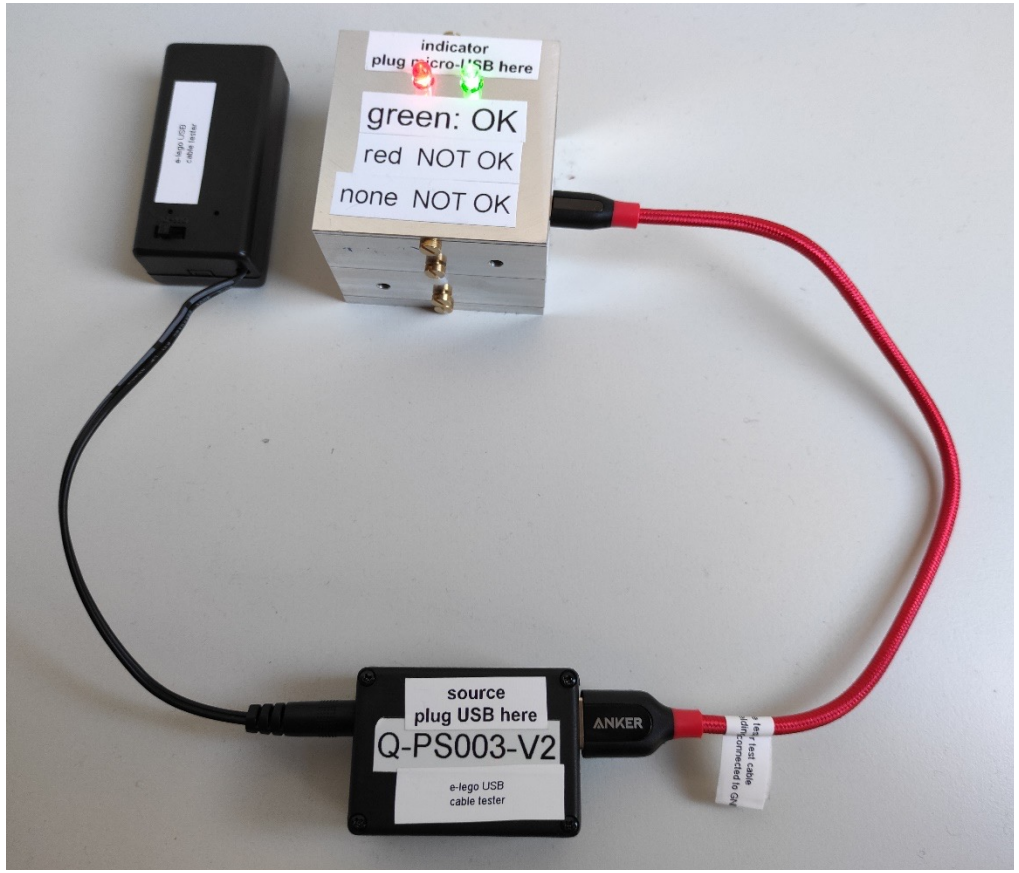

e-lego module

Photodiode
VV67 (Transimpedance Ampl.) + SU 800 (Buffer Amplifier)

Rail: 5V

PD board (VV67)

USB cable

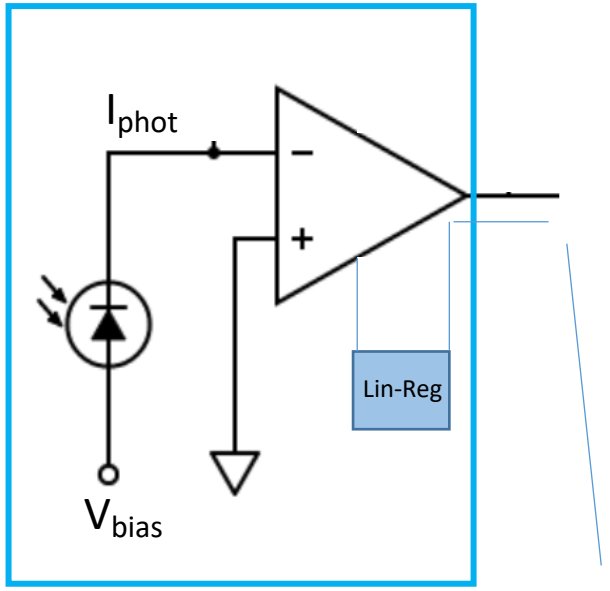

1/2V per decade
To 1V per decade
Jumper select. Rm 2mm

BW: 1 -10 Mhz.

Connector Signal: SMA

- Kurzes BNC Kabel mit ground

- Hohlstecker surface mount

Thorlabs SM1 mount

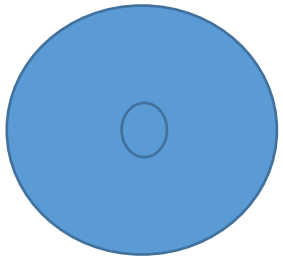

Logarithmic Photodiode

Harvard design

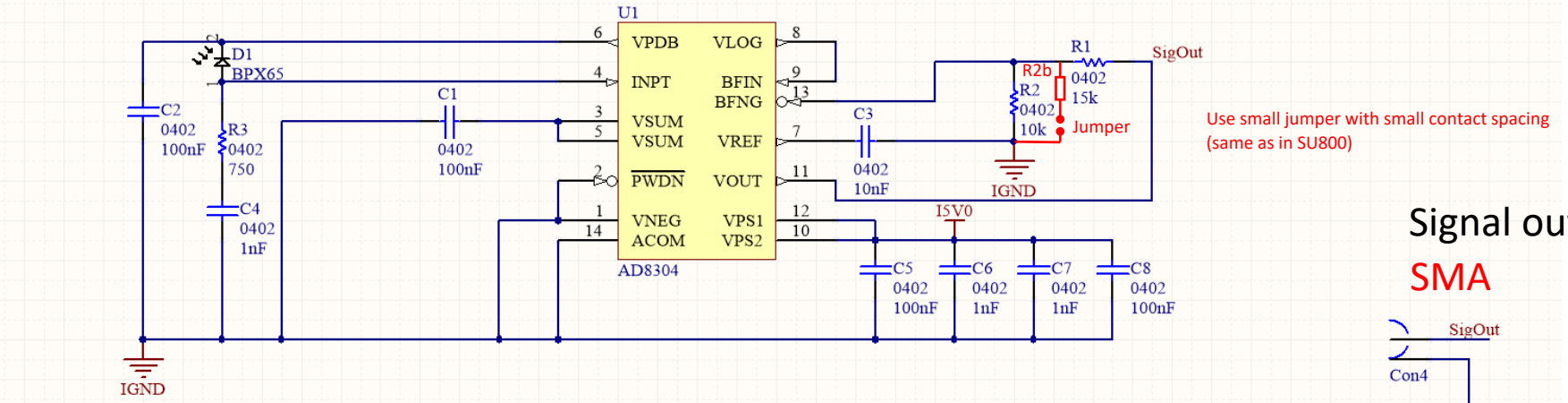

Use small jumper with small contact spacing (same as in SU800)

Signal out

SMA

~~R1 and R2 are chosen to provide 500mV/decade~~

Choose R1, R2, R2b such that with one of the jumper setting one obtains 500mV/decade and with the other one 1000mV/decade

Power in:
7.5V

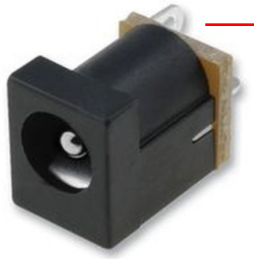

Hohlstecker gerade,
5.5 x 2.1 mm

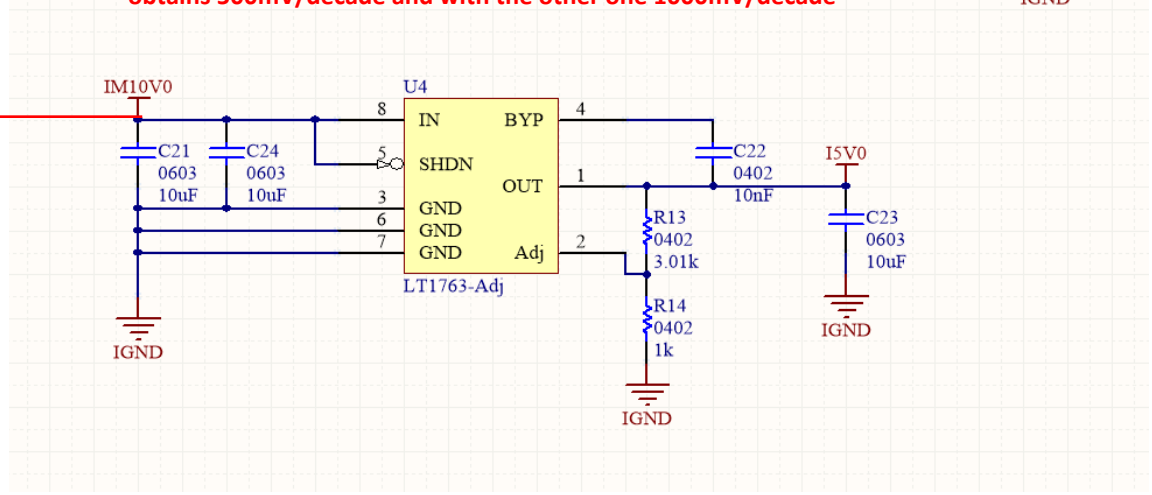

Photodiode Sensors

Hamamatsu S5972 (Si)

Hamamatsu S12180-005A (InGaAs)

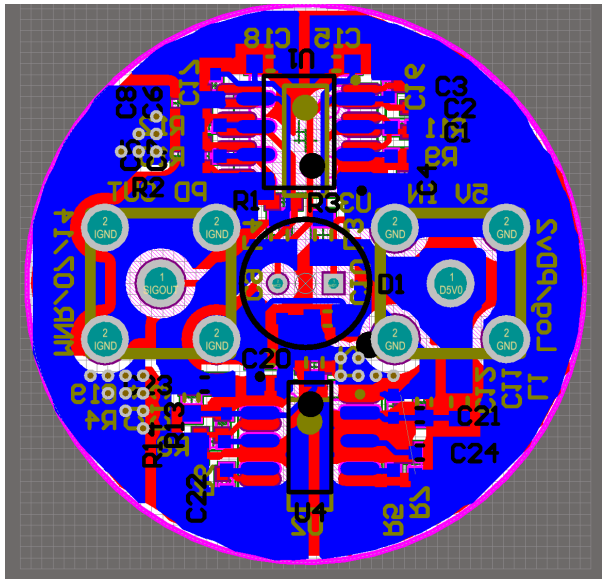

PCB has to be mounted in 1“ tube
Thorlabs SM1 (e.g. SMR1)

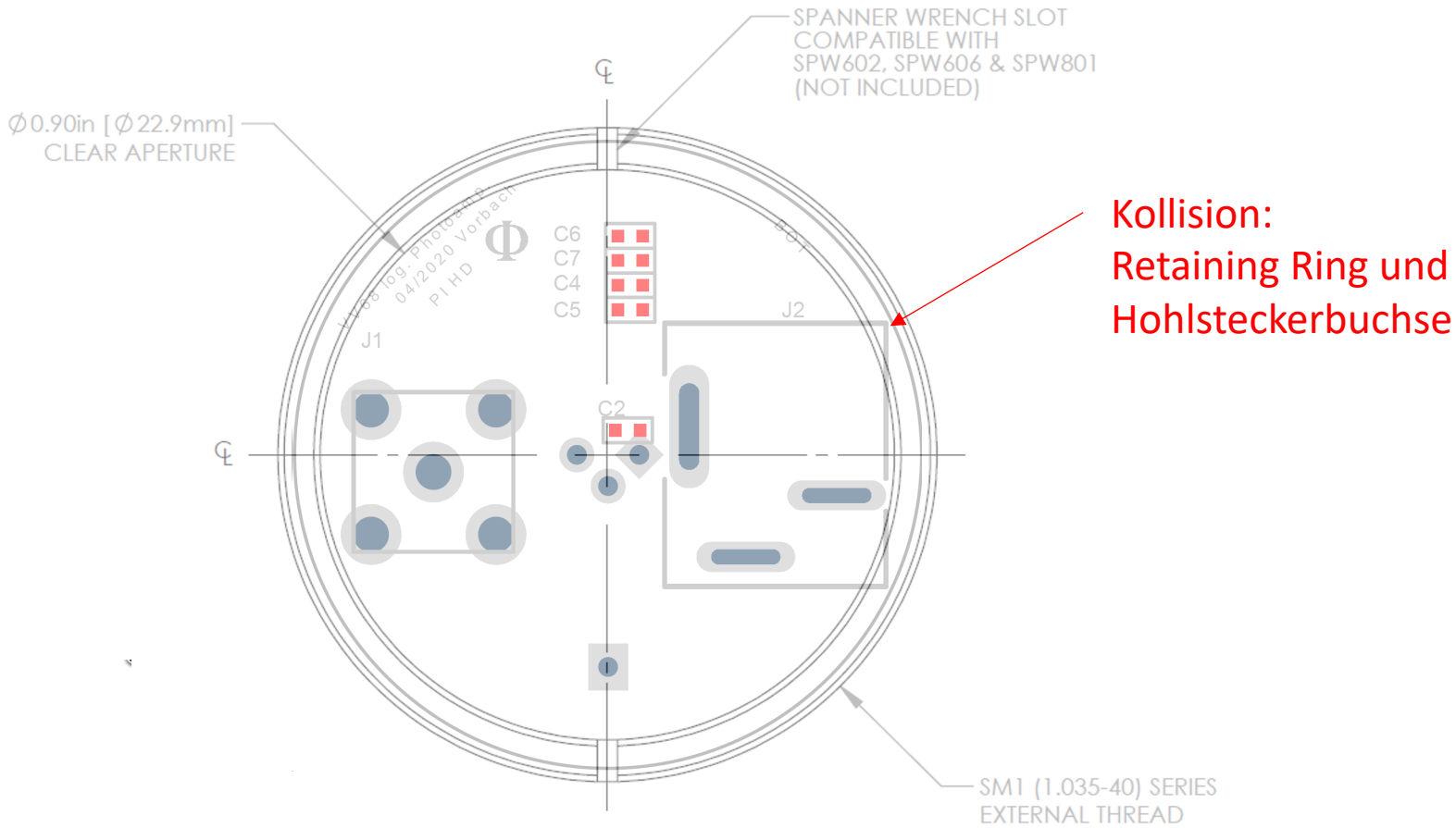

Kollision:
Retaining Ring und
Hohlsteckerbuchse

https://www.thorlabs.de/thorproduct.cfm?partnumber=SM1RR

https://www.thorlabs.de/thorproduct.cfm?partnumber=LMR1/M

Photodiode zentrisch aber um 90 grad gedreht

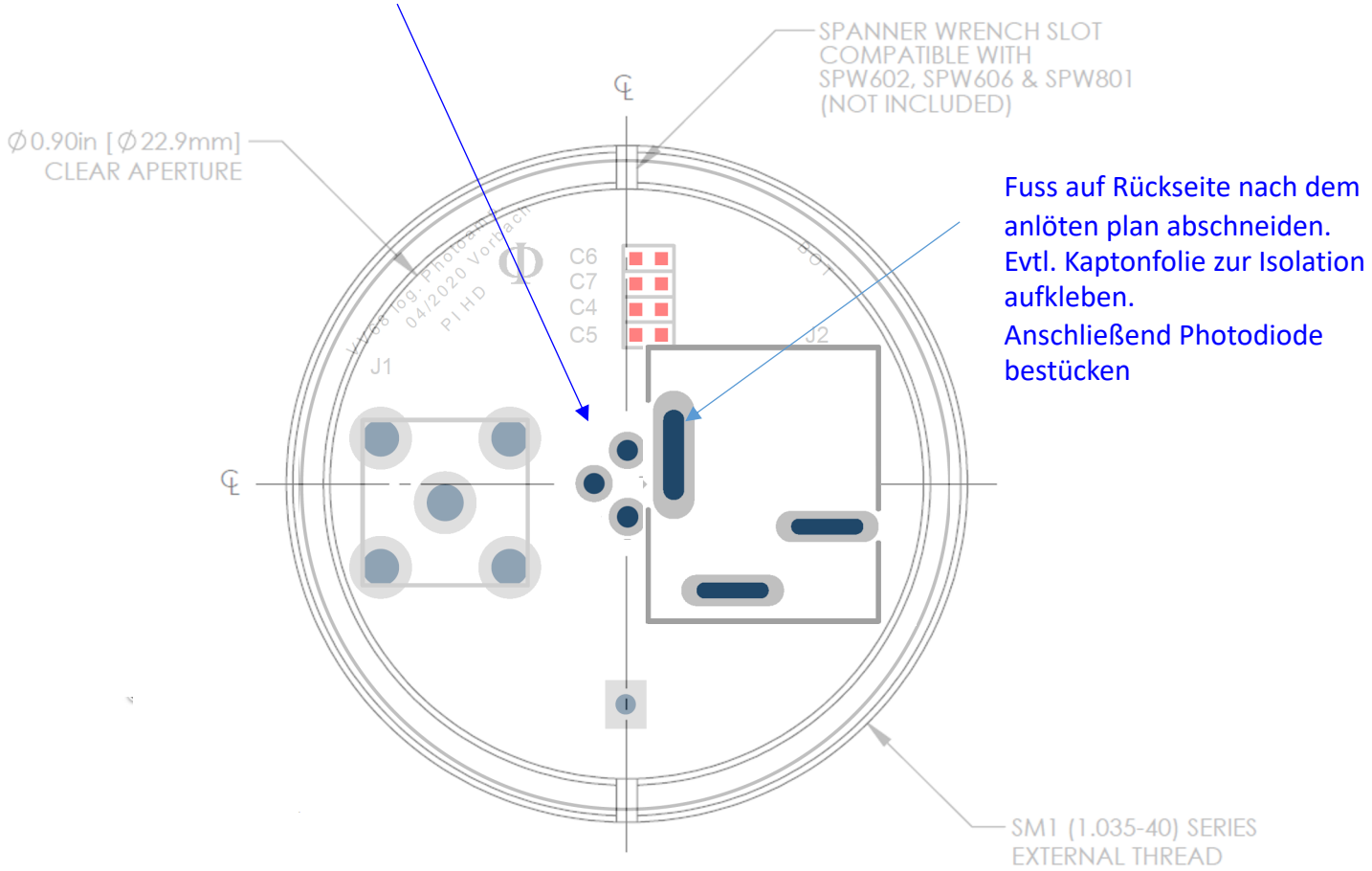

Fuss auf Rückseite nach dem anlöten plan abschneiden.
Evtl. Kaptonfolie zur Isolation aufkleben.
Anschließend Photodiode bestücken

https://www.thorlabs.de/thorproduct.cfm?partnumber=SM1RR

https://www.thorlabs.de/thorproduct.cfm?partnumber=LMR1/M

Logarithmic Converter

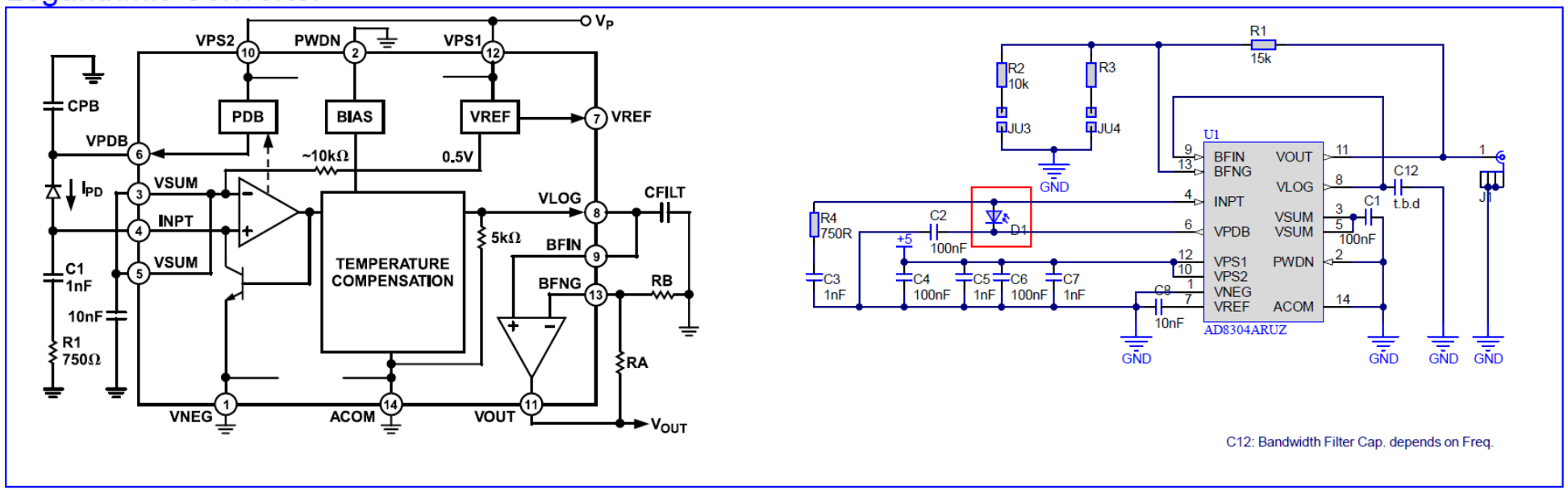

Power supply

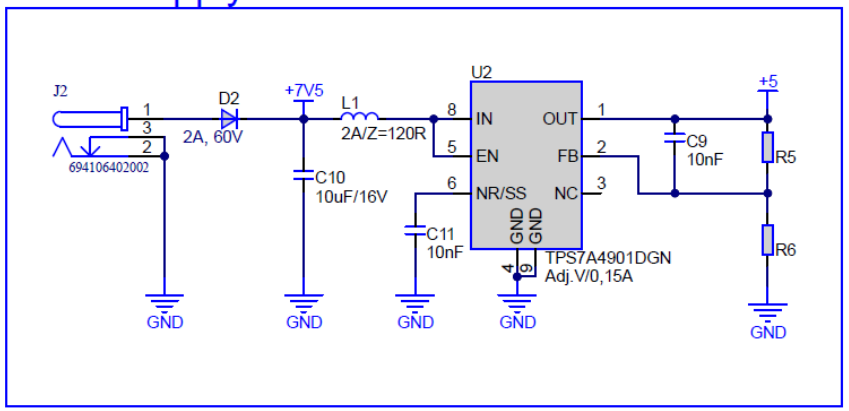

GND to GND-CASE

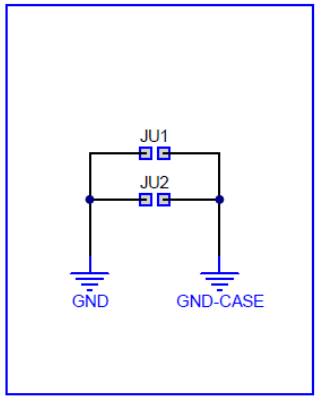

Photodiodesensor

Hamamatsu S5972 (Si)
Hamamatsu S12180-005A (InGaAs)

Title: VV068_Log_Fotodiodenverstärker 1-Zoll		
Type:	Version:	Name: Vorbach
Date: 04.05.2020	Size: A4	Sheet: * of *
File: VV68_1.SchDoc		

Physikalisches Institut Heidelberg

VV68 - Required Tests

1. Use Dehner Sys Switching Power Supply .
2.Noise measurement with high Z : Measure Spectral noise density in [V/sgrt(Hz)]. Calculate equivalent Power Spectral density using Z=50 Ohm .**Output:**
3.Noise measurement, Photodiode covered (no light), high Z: Determine Spectral noise density in V/sgrt(Hz). Calculate equivalent Power Spectral density using Z=50 Ohm .
4.Measure Bode Plot: Transfer Function of Amplitude and Phase as function of modulation frequency f of the light. Use input laser signal that is weakly modulated by frequency f (LED current modulation or laser plus Accousto optical modulator). Compare to reference Photodiode.

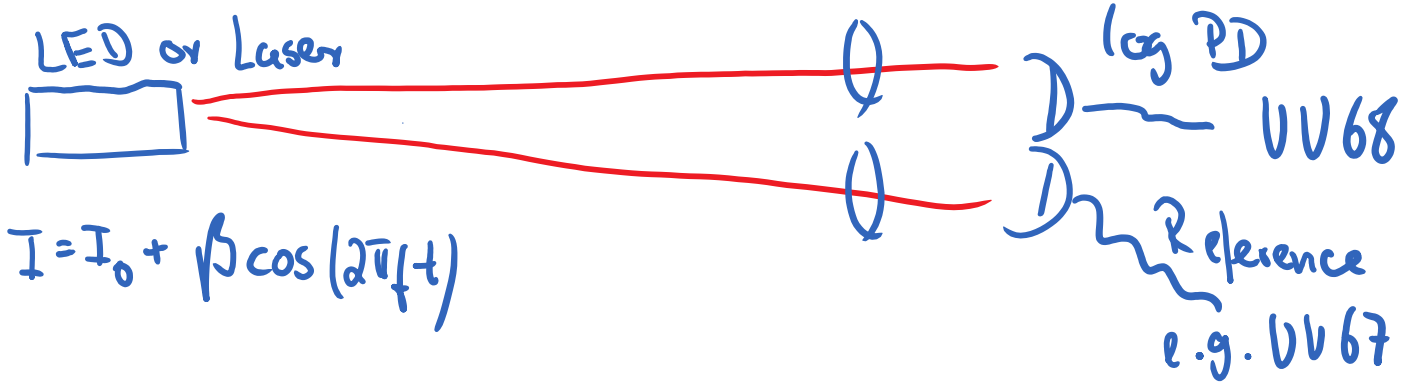

e-lego sub-module

Power Adapter to PD-USB Q-PS003

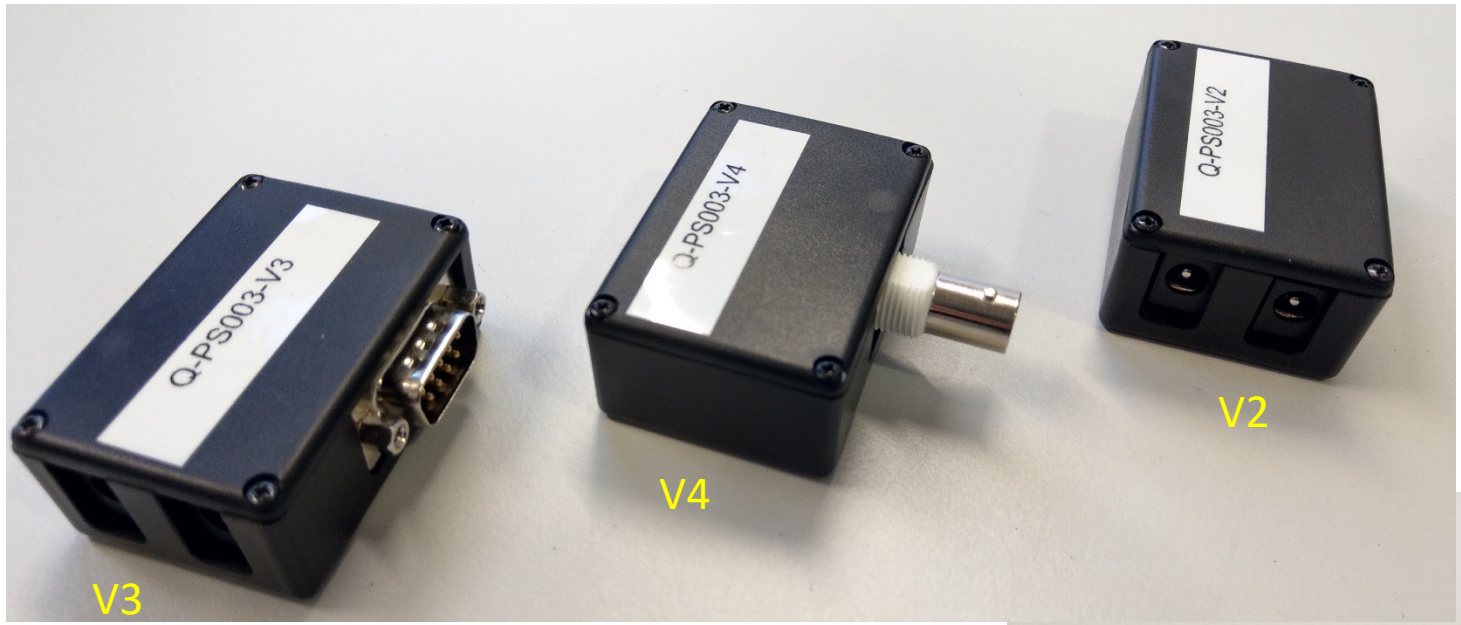

Power Adapter to PD-USB Q-PS003

Version 1: HS, Sub-D, BNC, PD-USB-PS

Version 2: HS to PD-USB-PS

Version 3: Sub-D to PD-USB-PS

Version 4: HS to BNC

→ **Generally very usefull**

Legend: HS: Hohlstecker (Power plug)

USB Vcc [+5V] pin: +HS
USB GND pin: -HS
USB D+ pin: n.c.
USB D+ pin: n.c.
USB Shielding: GND of HS

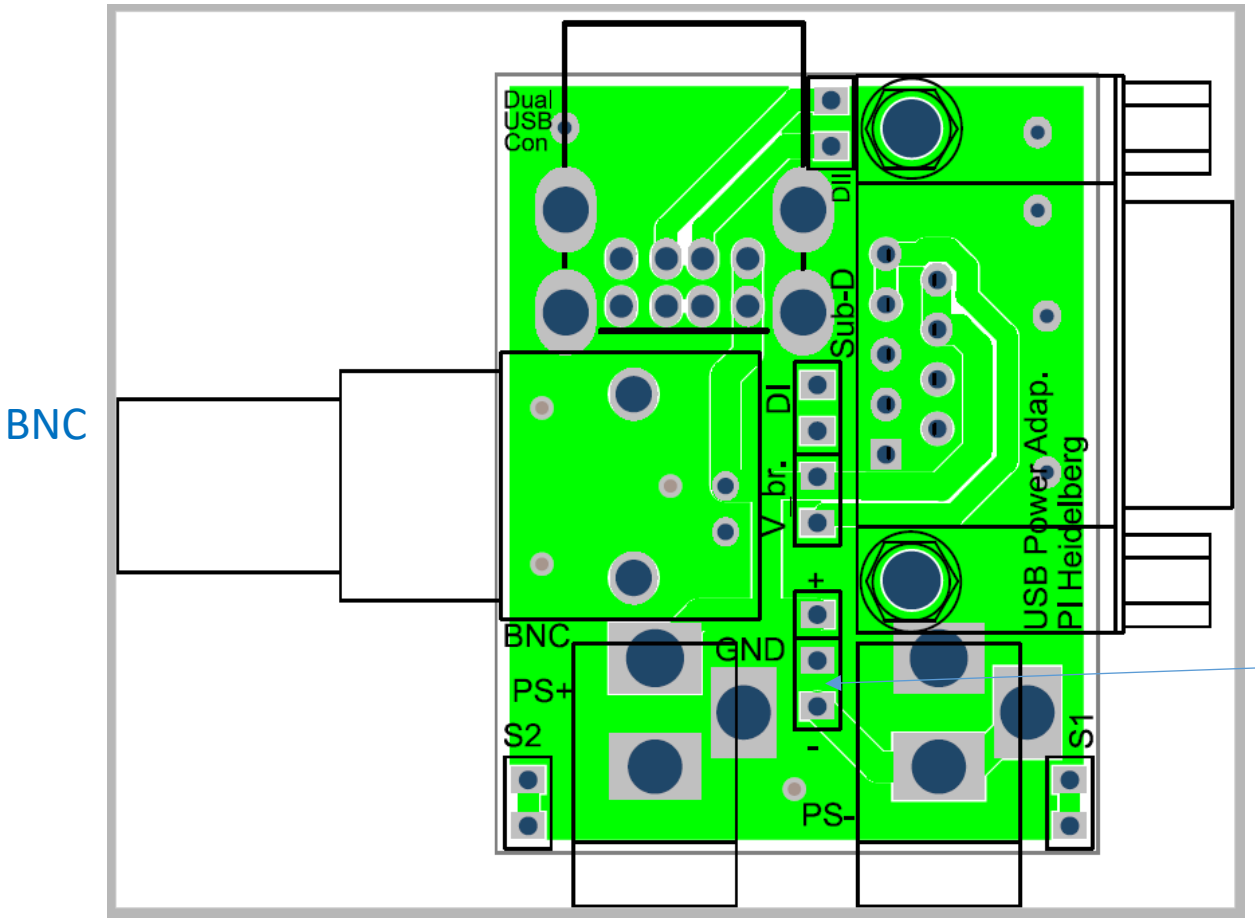

Connected: **HS+** → Sub-D Pin 8-9 (+15V) → BNC+ → **USB +Vcc [5V] pin**
HS- → Sub-D Pin 6-7 (-15V) → PD-USB-PS → **USB GND pin**
GND of the HS → Sub-D Pin 1-3 (GND) → BNC - → **USB shielding**

V-bridge connects Sub-D pin 4-5 (12V) with Pin 8-9 (15V) (standard: not set)

e-lego module

USB Connector module: SU806

e.g. for Power distribution from Q-PS003 Power Adapter

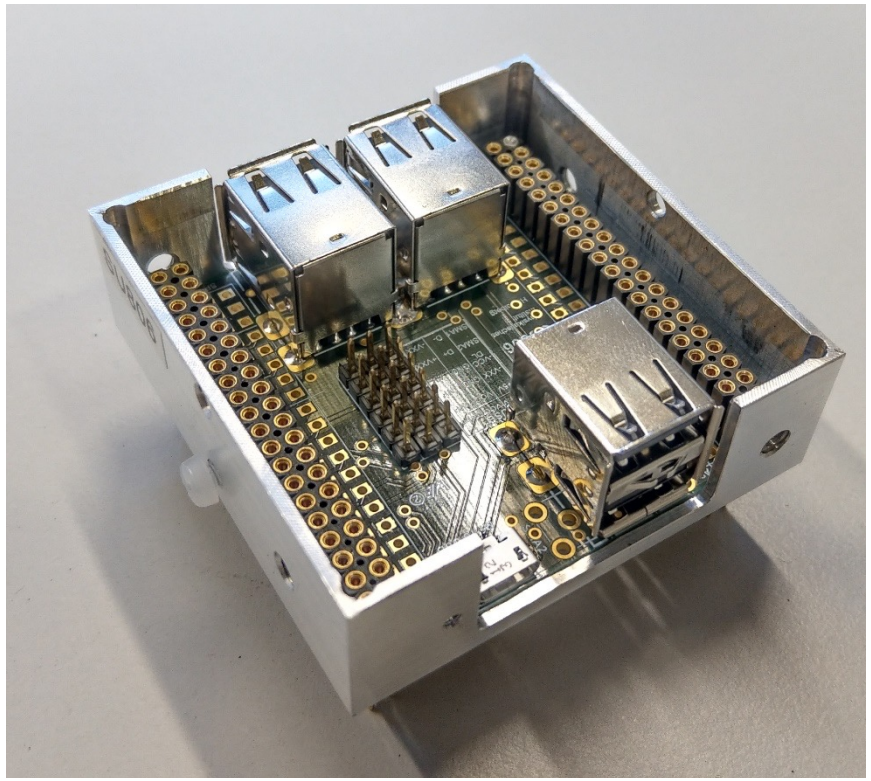

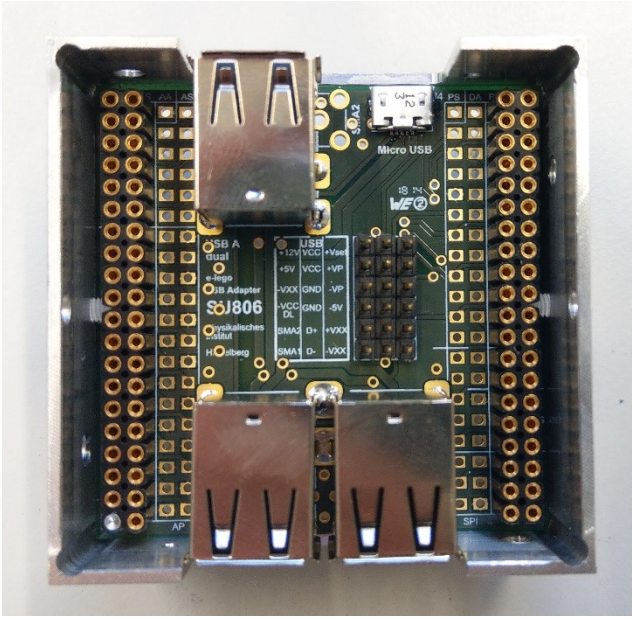

Power Distribution Adapter PD-USB SU806

- All pins of the individual USB connectors are interconnected.
- The shielding of the USB connectors are connected to ground
- The pin-strip in the center can be used to connect some the USB-pins to the supply pins of the e-lego module
- **Version 1:** Only 4 USB connectors (3x Dual A, 1x Micro B) to interconnect several Power USB cables
- **Version 2:** 4 USB connectors and pins to connect to e-lego module
- **Version 3:** 2 SMA connectors instead of the 3rd USB A Dual Connector to connect to a signal or a power line from the USB pins.

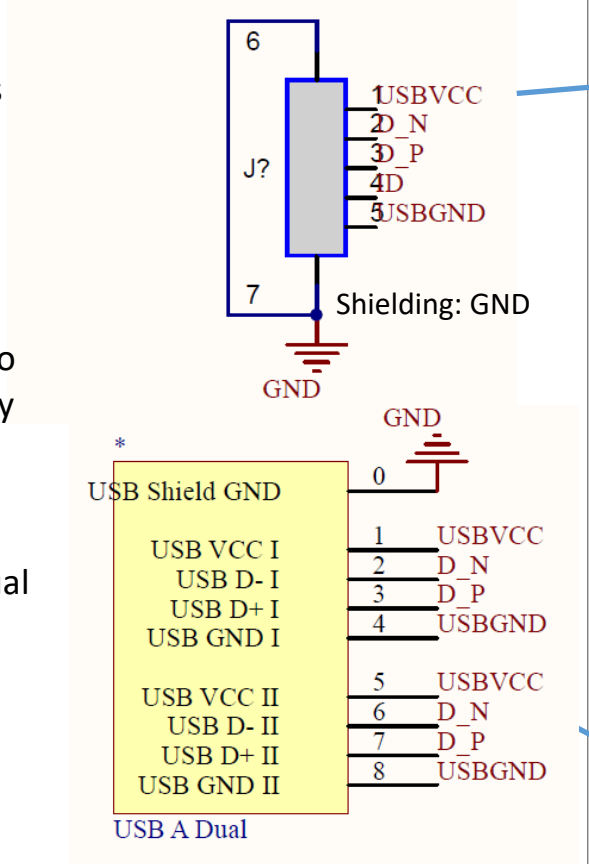

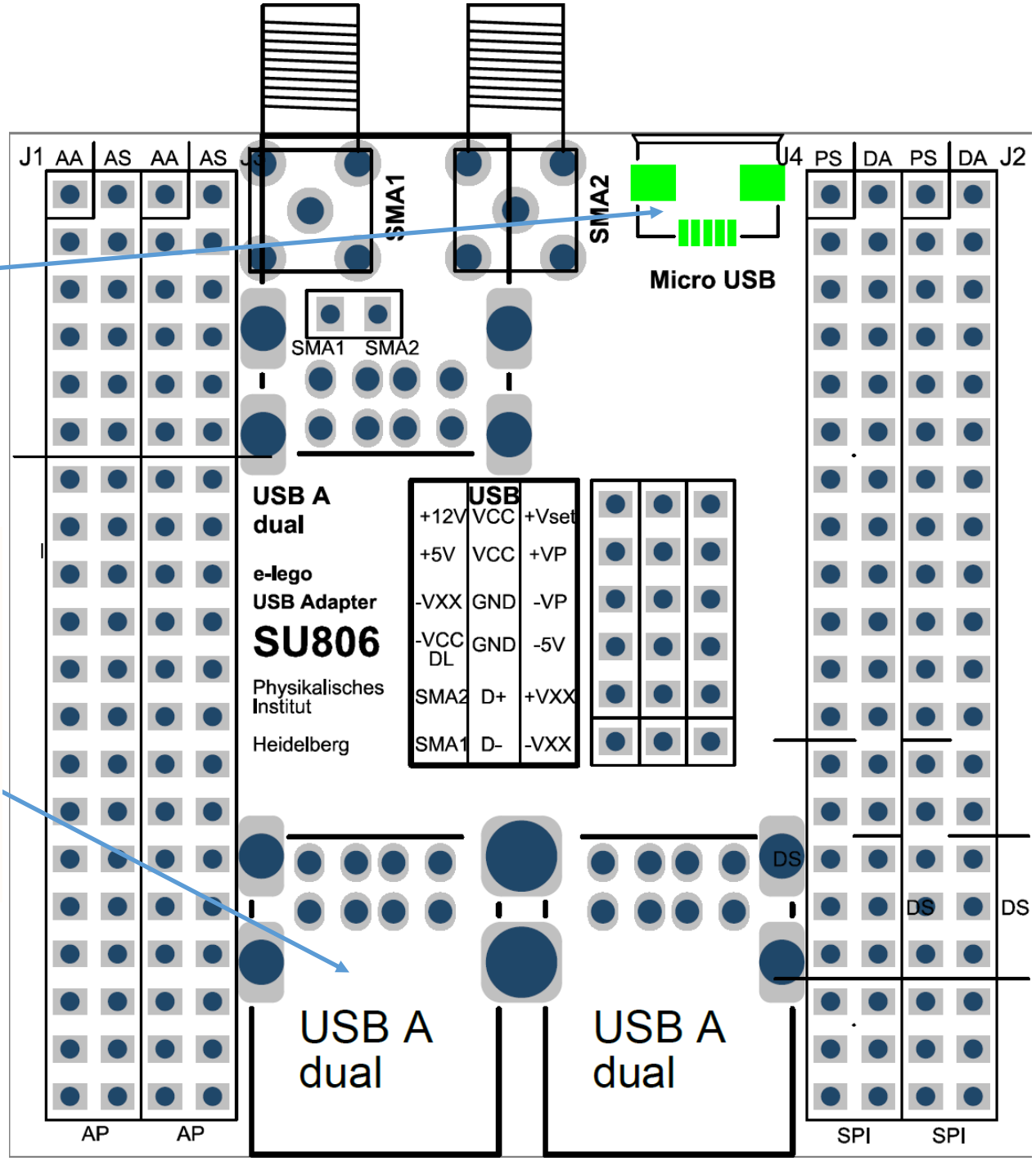

USB Power Distribution Adapter SU806

Bestückung und Komponentenliste

Version 3:
SMA Connector (2 Stück)
2 x Pin Leiste male

Version 1 and 2:
USB A Dual connector
Assmann A-USBA-2P
Voelkner No: D98565

All Versions:
USB A Dual connector
Assmann A-USBA-2P
Voelkner No: D98565
(2 Stück)

Top-side: - block Pin with solder
Bottom side: - cut Pin

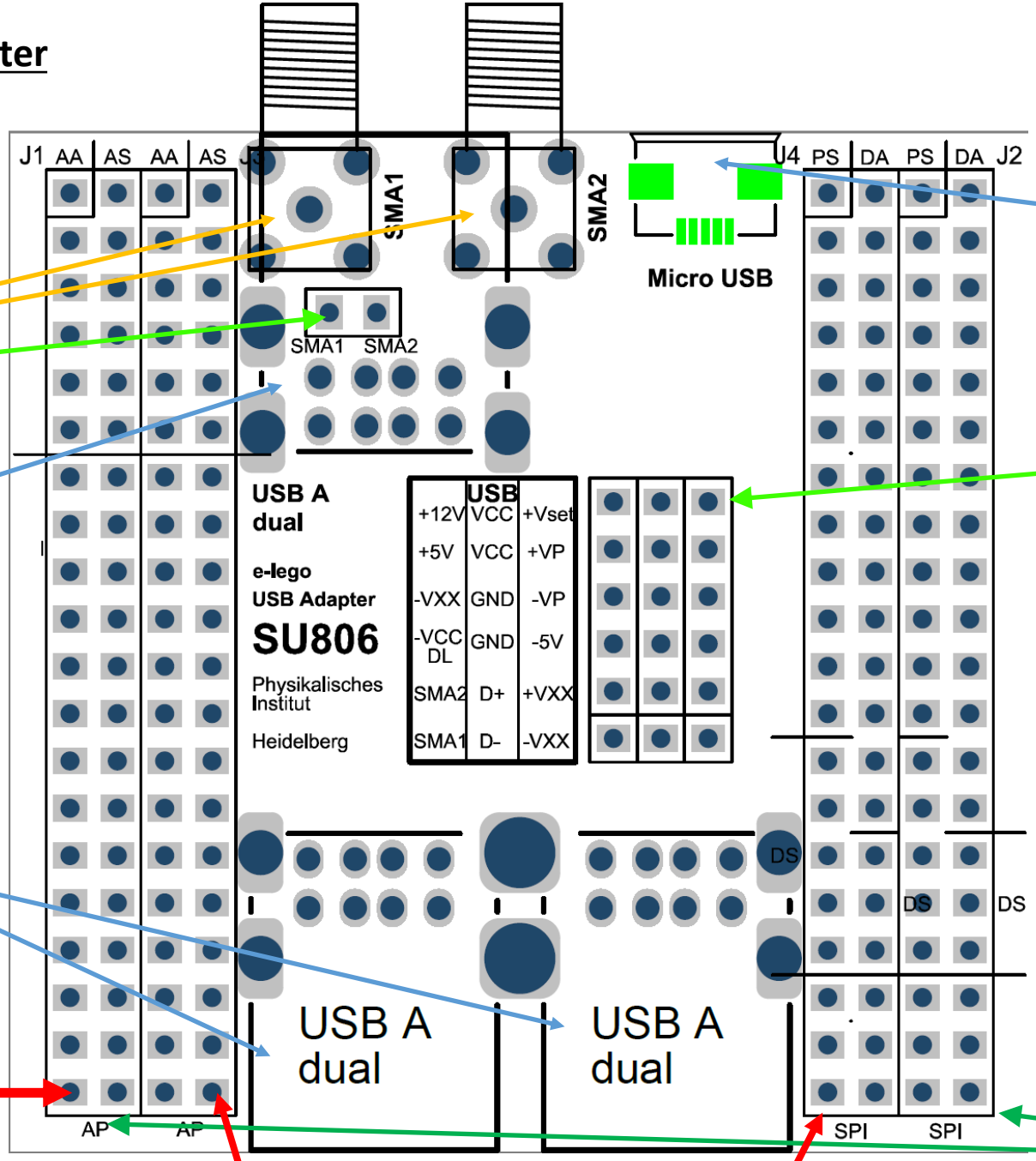

All Versions:
Micro USB Type B Connector
Molex: 47346-1001
Mouser No: 538-47346-1001

Version 1:
None
Version 2 und 3:
6 x Pin Leiste male
(3 Stück)

Version 1:
None
Version 2 und 3:
e-lego connectors
20 x 2 Stiftleiste (BL14)
(2 Stück)

Do not place the inner double-Pin-row

SU806 Notes production

- Check for the latest production version and check for additional notes on the workshop server
- Add Polarity Protection: Pin 39: Top: Block pin with solder. Bottom: Cut pin
- **Fix Micro USB Connector additionally with epoxy glue**
- Put PCBs into Aluminium case. Drawings of the cases can be found here:
  \\pi2\microcontroller\QD-Ultracold\Q-El - e-lego\Cases and Heatsink Needed: **Case BNC**
- Label the finished boxes with the Part-number **SU806**
- Add some notes to the workshop server if there has been some modifications to the previous production version
- If not available yet, make pictures of the produced component an put them on the workshop server
- If not available yet, leave one module in the e-workshop Muster box and label it with „Muster E-Werkstatt“

e-lego module

USB-C Connector module

- not yet developed -

USB-C for e-lego

USB-C receptacle A pin layout

Pin	Name	Description
A1	GND	Ground return
A2	SSTXp1	SuperSpeed differential pair #1, TX, positive
A3	SSTXn1	SuperSpeed differential pair #1, TX, negative
A4	V_{BUS}	Bus power
A5	CC1	Configuration channel
A6	Dp1	USB 2.0 differential pair, position 1, positive
A7	Dn1	USB 2.0 differential pair, position 1, negative
A8	SBU1	Sideband use (SBU)
A9	V_{BUS}	Bus power
A10	SSRXn2	SuperSpeed differential pair #4, RX, negative
A11	SSRXp2	SuperSpeed differential pair #4, RX, positive
A12	GND	Ground return

E-lego Pins

Pin	USB-C	E-lego
A1	GND	GND
A2	SSTXp1 (differential)	Signal+
A3	SSTXn1 (differential)	Signal-
A4	VBus	+Vcc
A5	CC1	-Vcc
A6	Dp1 (differential)	
A7	Dn1 (differential)	
A8	SBU1	
A9	Vbus	
A10	SSRCn2 (differential)	
A11	SSRCp2 (differential)	
A12	GND	

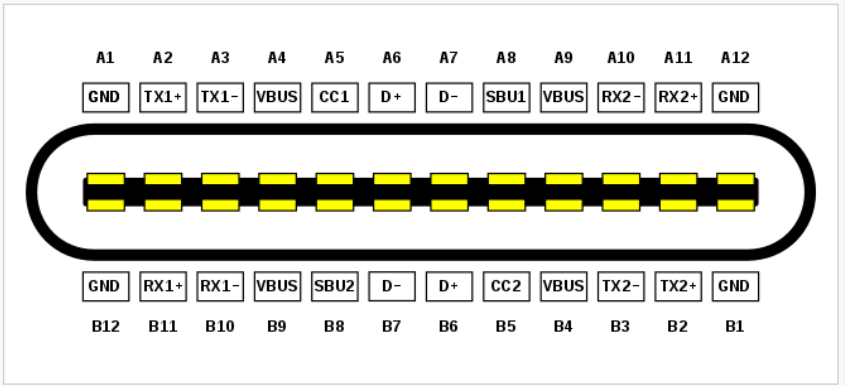

USB-C receptacle pinout end-on view

From:
https://en.wikipedia.org/wiki/USB-C

e-lego AOM Driver

e-lego unit

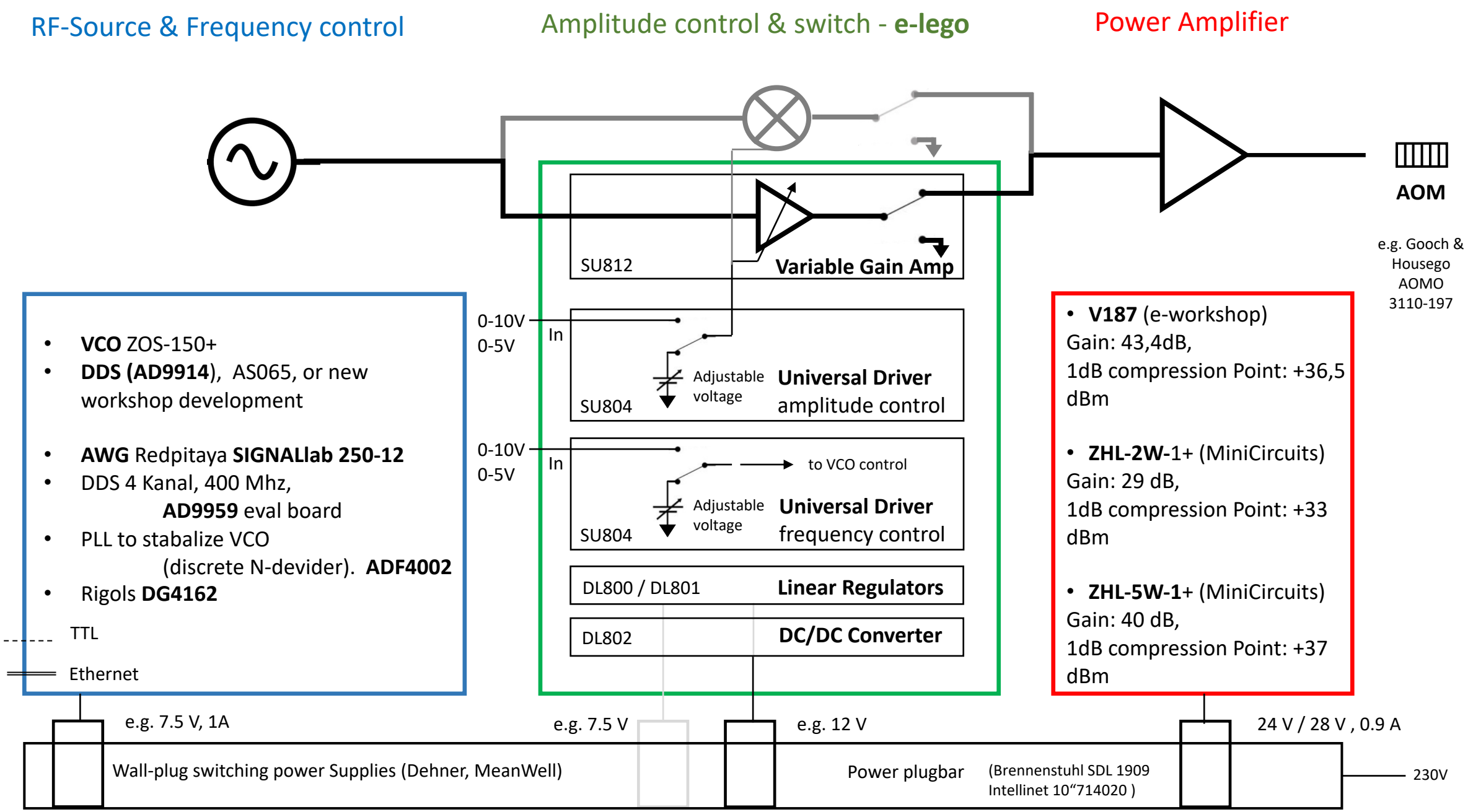

e-lego AOM Driver

1) Decide on RF frequency source (see e.g. phase noise below, tunability etc.)
2) Choose type of RF amplitude tuning (dynamical range, power versus tuning voltage, modulation speed)

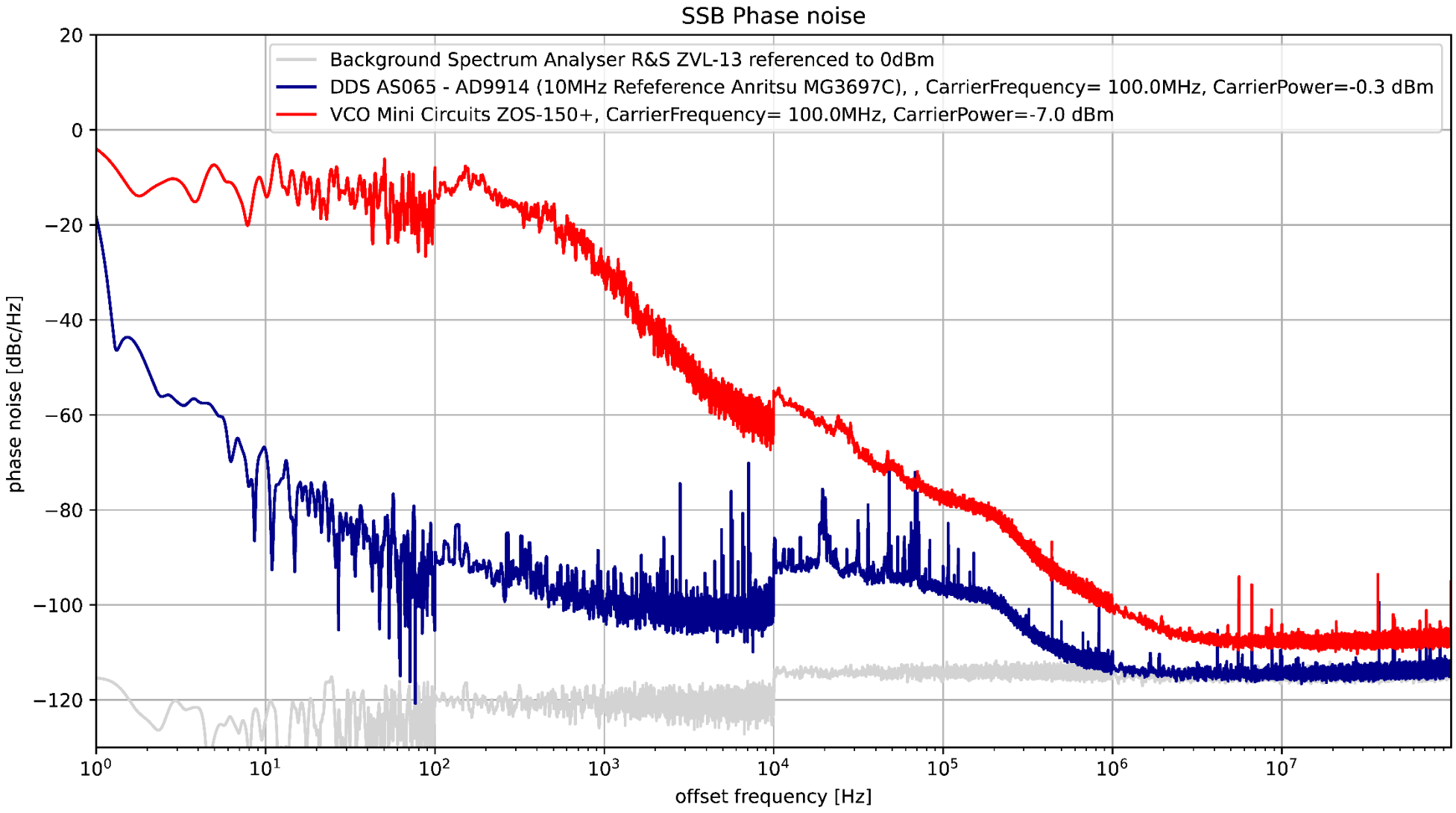

Q-Dr007 – e-lego AOM driver with VCO and VGA and internal & external amp. & freq. control

e-lego unit

DL800 (light) + **SU804** + **SU804** + **SU812**

Power Supply | Universal driver Gain 1.7 | Universal driver Gain | Variable Gain amplifier

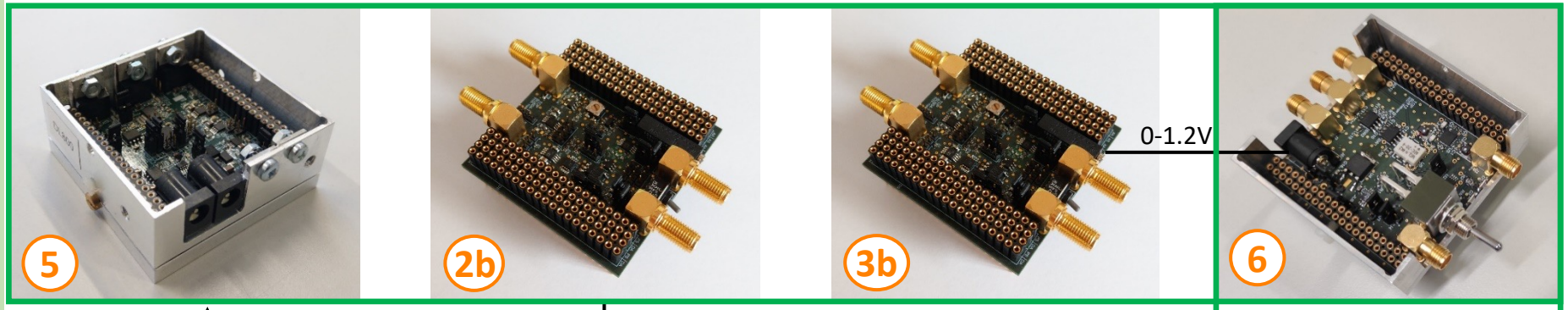

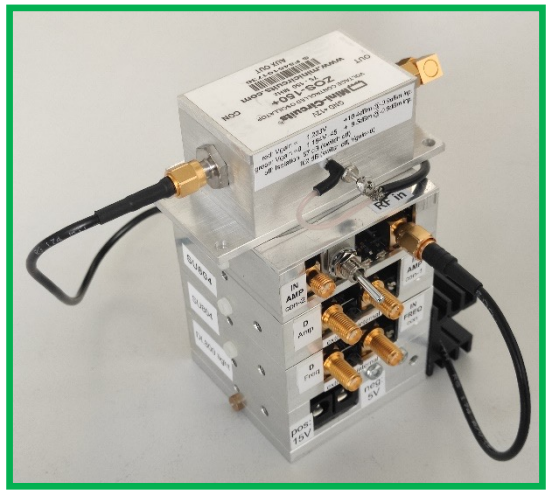

neg: 5V pos: 15V

0-13 V

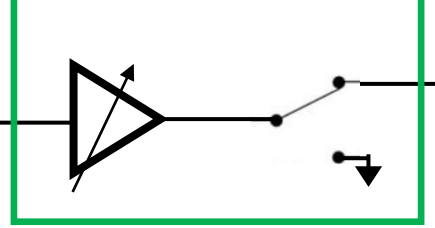

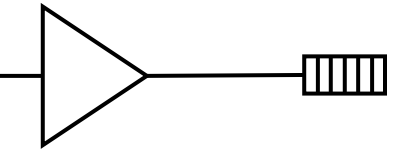

ZHL-5W-1+

Gooch&Housego
AOMO 3110-197

VCO: ZOS-150+

Tunable Frequency source | VGA Amplitude control and switch | Power Amplifier | AOM

Q-Dr007 – Jumper and label

Frequency

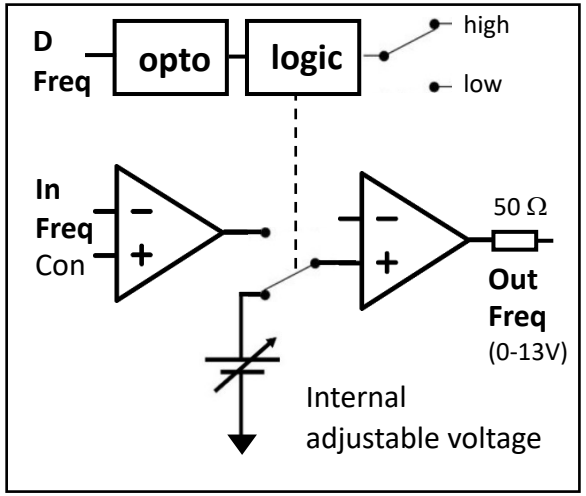

Amplitude

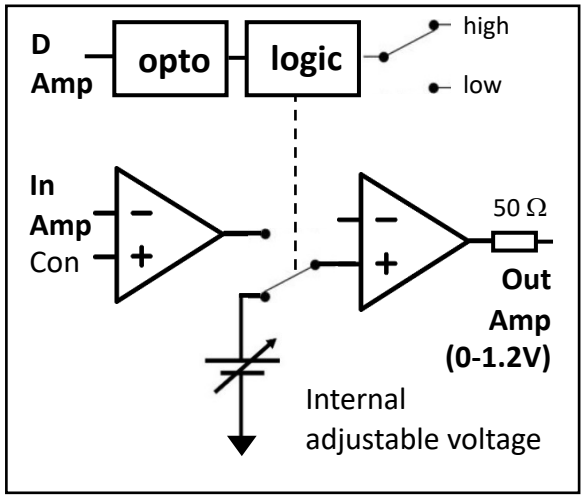

Variable Gain Amplifier

RFin CPLout RFout TTL

Layer 1: PS (DL800) **Layer 2: Freq** (SU804) **Layer 3: Amp** (SU804) **Layer 4: VGA** (SU812)

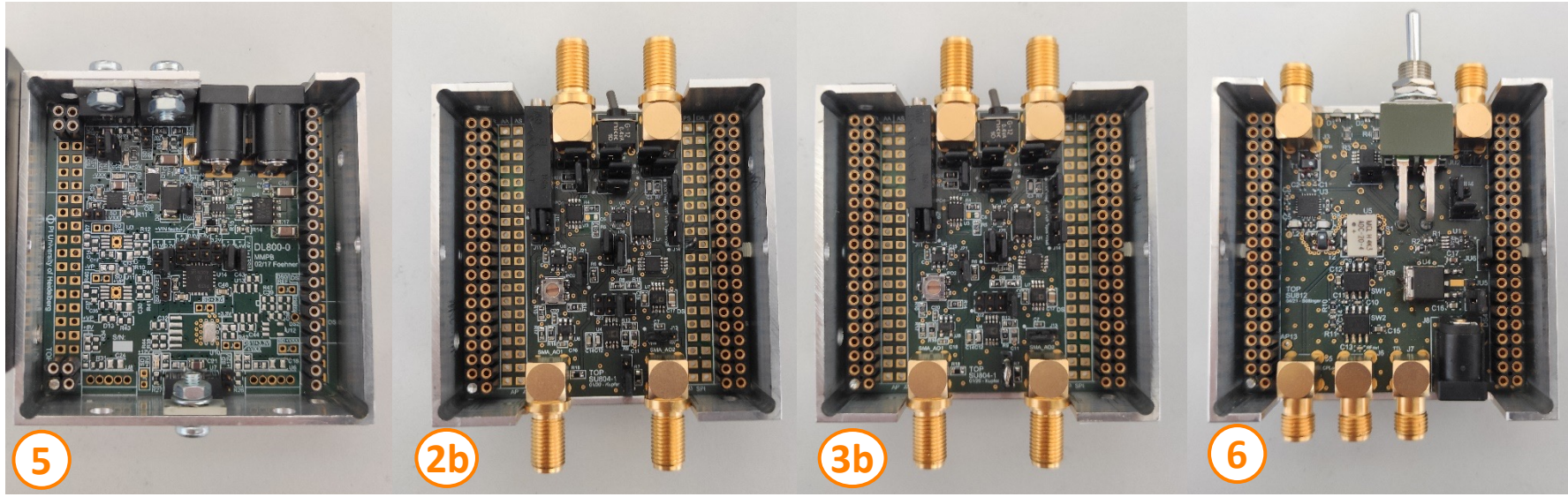

for a detailed layout of the jumper settings see the corresponding page of SU804

top

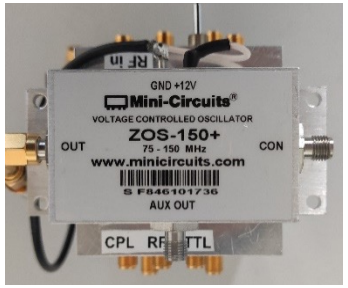

front

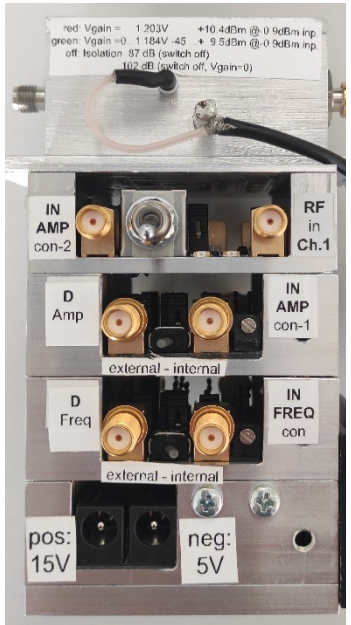

back

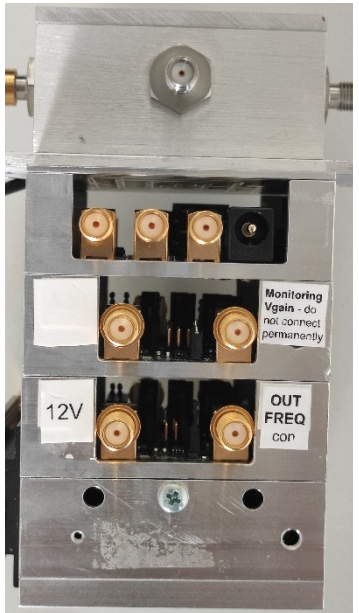

side 1

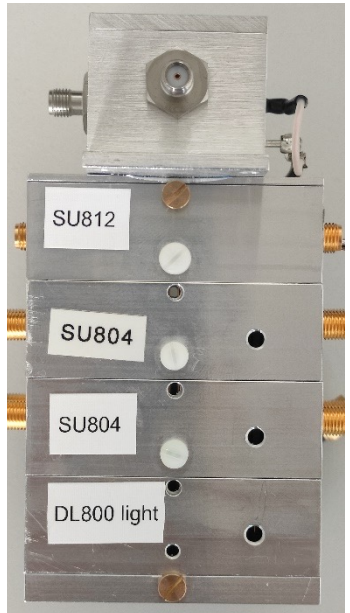

side 2

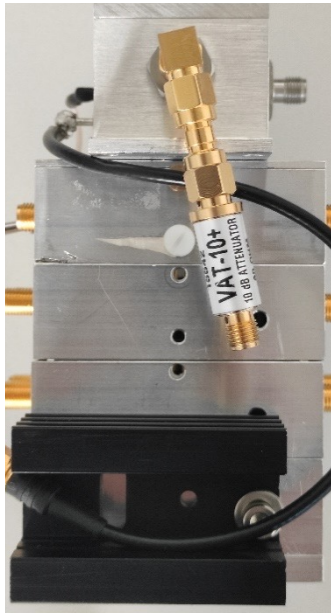

Q-Dr007 - Demonstration kit with Amplifier V187

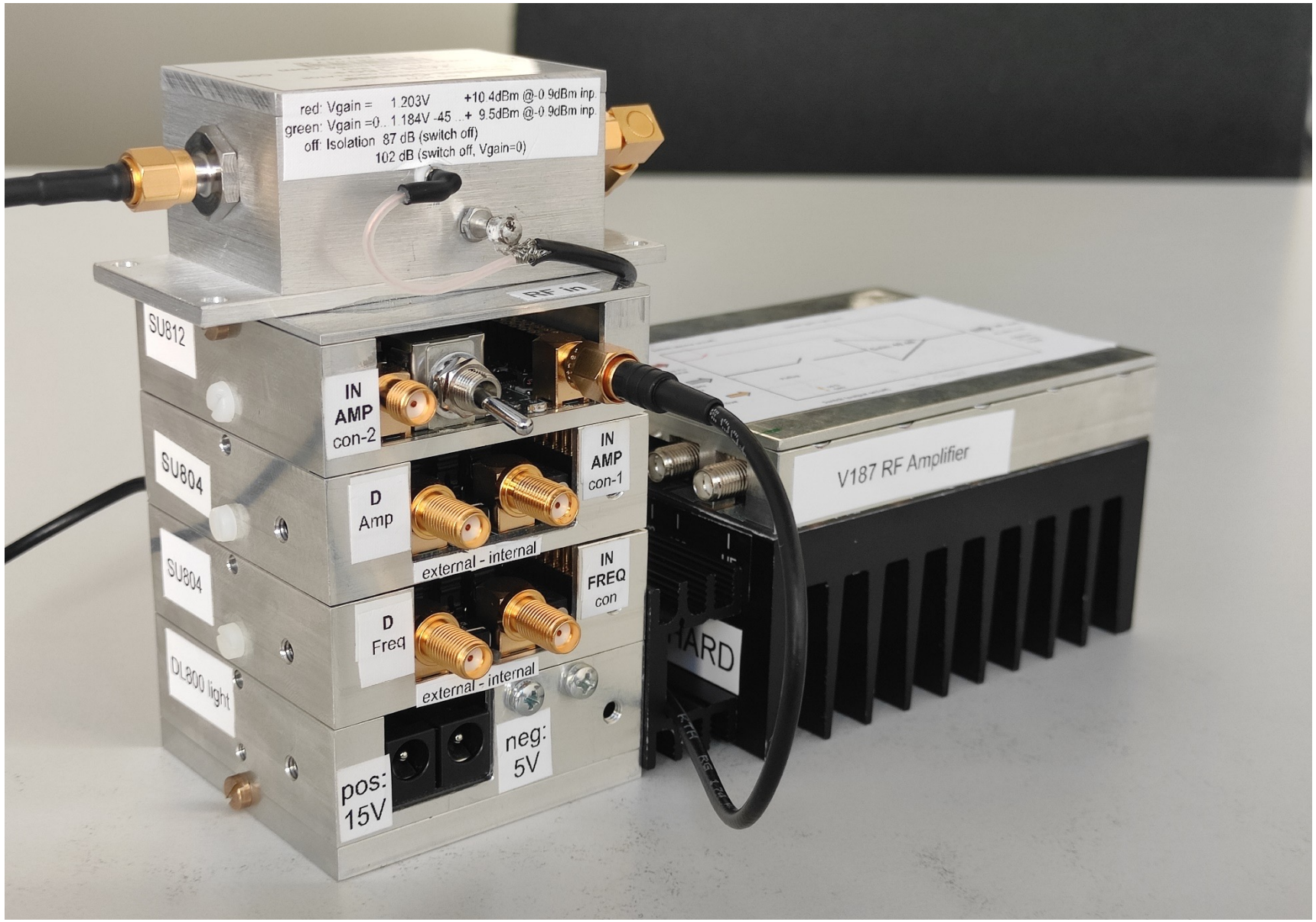

Q-Dr007 – Jumper Settings for DL800/DL8001

Jumper setting

5

Recommended supplies: pos: 15V, neg: 5V on DL800 (light).

Recommended Rail Voltages: -Vxx=-2.7V, Vset=14.4 V. To be set on the DL800 (light) / DL801 (Jumper '1.4'+6.4+6.4+0.2 [V] for Vset) and Vset selected on SU804.

→ Results in max output voltage of the SU804 universal driver of Aout2 (tuning voltage for VCO): 13.2 V → corresponds to 140 MHz VCO frequency for the ZOS-150+

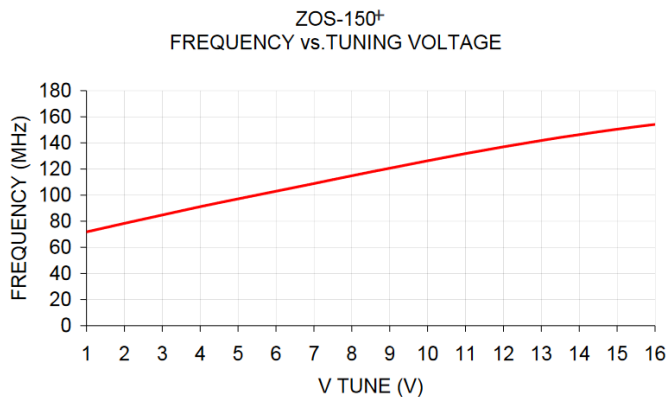

Q-Dr008 – Jumper Settings for DL800/DL8001

Jumper setting

7

Recommended supplies: pos: 9V, neg: 5V on DL800 (light).

Recommended Rail Voltages: -Vxx=-2.7V, Vset=7.8 V. To be set on the DL800 (light) / DL801 (Jumper '1.4'+6.4[V] for Vset) and Vset selected on SU804.

Q-Dr0011 – Jumper Settings for DL800/DL8001

Jumper setting

8

Recommended supplies: pos: 15V, neg: 7.5V on DL800

Recommended Rail Voltages: -Vxx=-2.7V, Vset=6 V. To be set on the DL800 DL801 (Jumper '1.4'+3.2+0.8+0.4+0.2 [V] for Vset) and Vset selected on SU807.

Q-Dr008 - Dual e-lego AOM driver with Function-Gen. and VGA and internal & external amp. control

e-lego unit

DL800 (light) + **2 x SU804** + **2 x SU812**

Power Supply — Universal driver Gain — Variable Gain amplifier

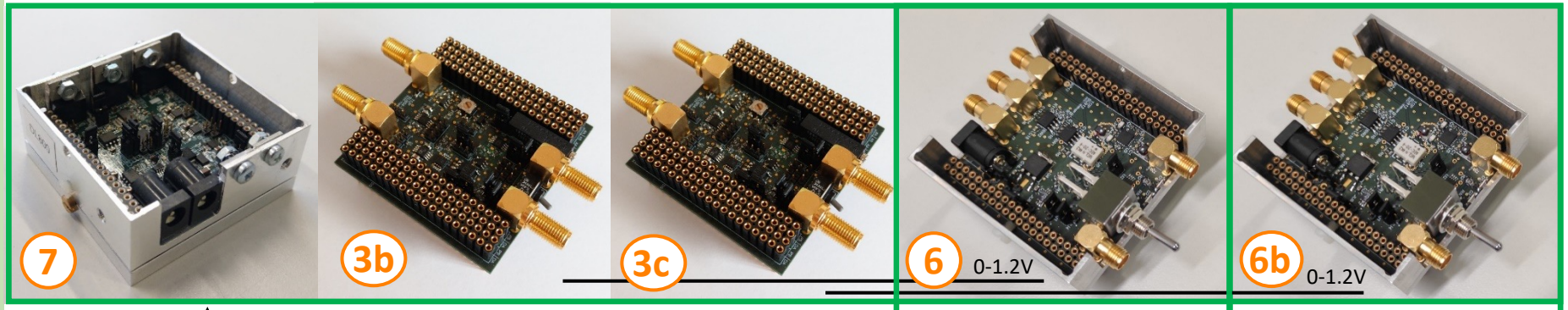

neg: 5V pos: 9 V

Ch.1 AP8 — Ch.2 AP7 — Ch.1 AP8 — Ch.2 AP7

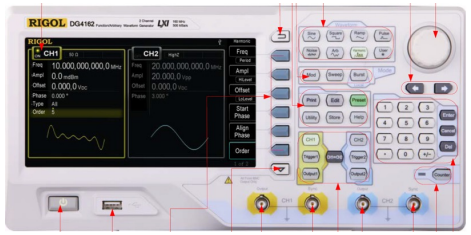

2 Channel Function Generator DG4162

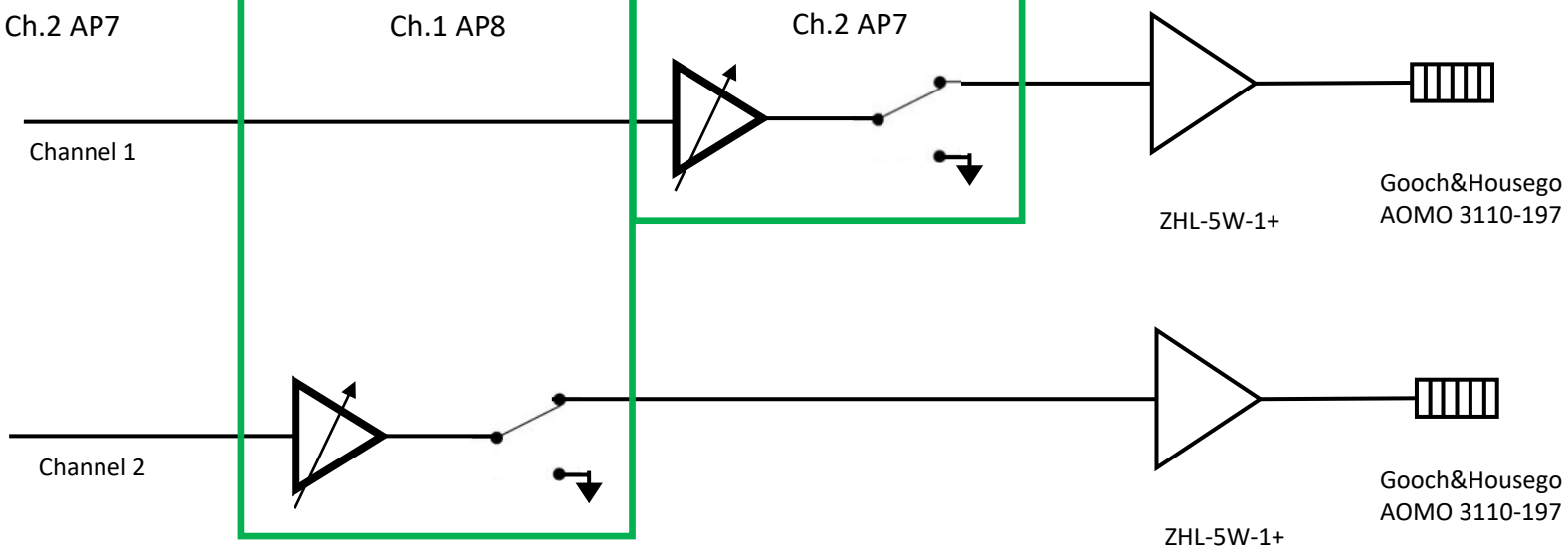

Tunable Frequency source — VGA Amplitude control and switch — Power Amplifier — AOM

Q-Dr008 – Jumper and label

Amplitude Ch.2

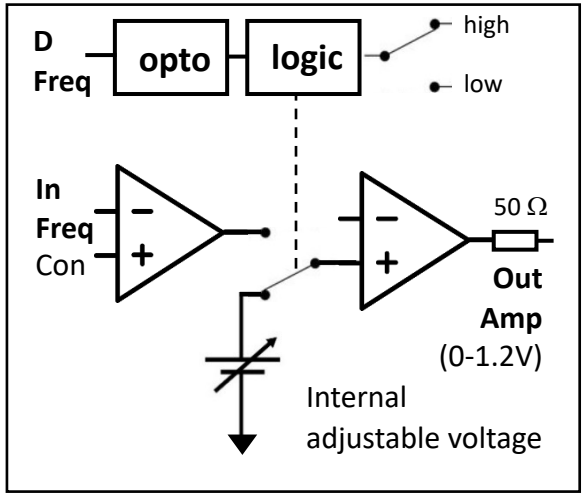

Amplitude Ch.1

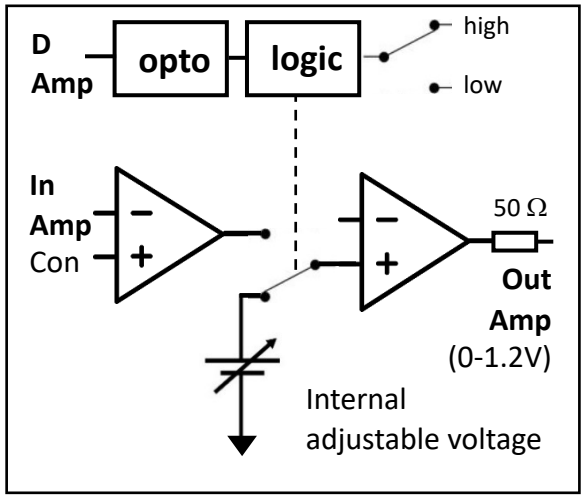

2 x Variable Gain Amplifier

RFin CPLout RFout TTL

L1: PS (DL800) **L2 2: Amp-1** (SU804) **L3: VGA-1** (SU812) **L4: Amp-2** (SU804) **L5: VGA-2** (SU812)

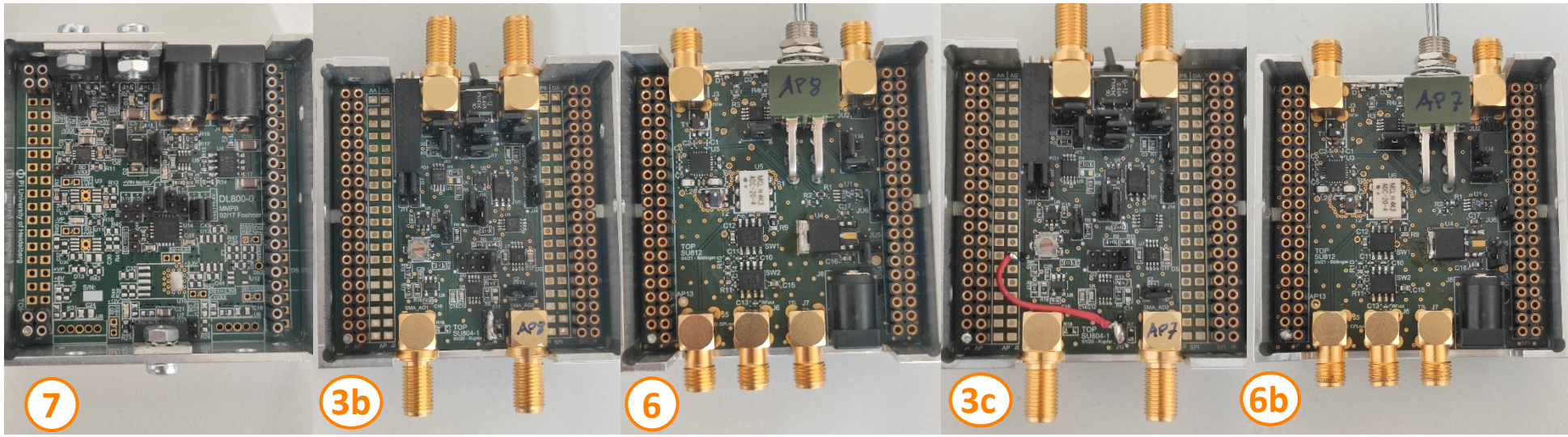

for a detailed layout of the jumper settings see the corresponding page of SU804

front

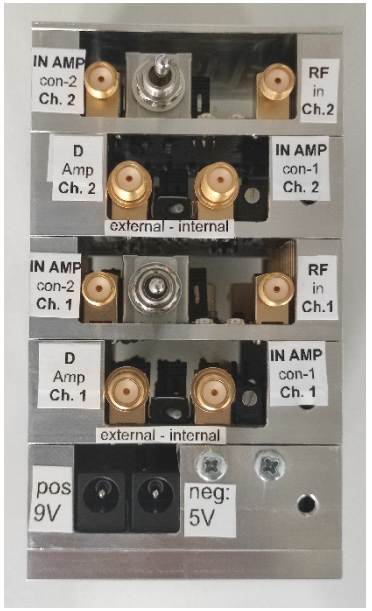

back

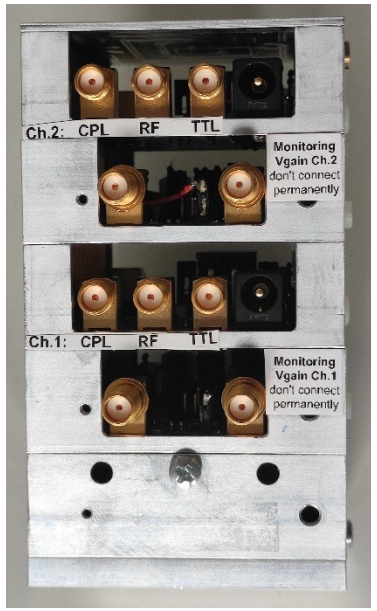

side 1

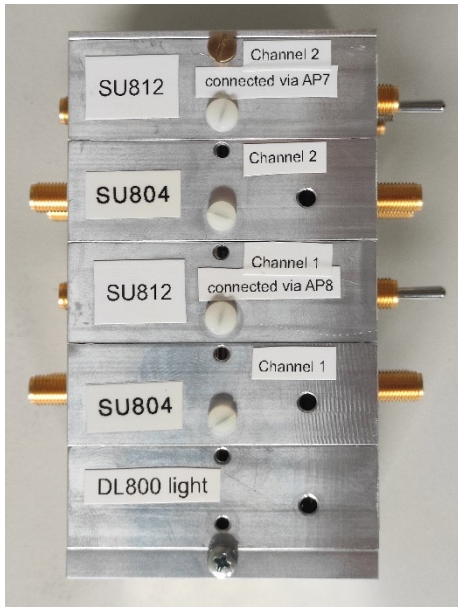

side 2

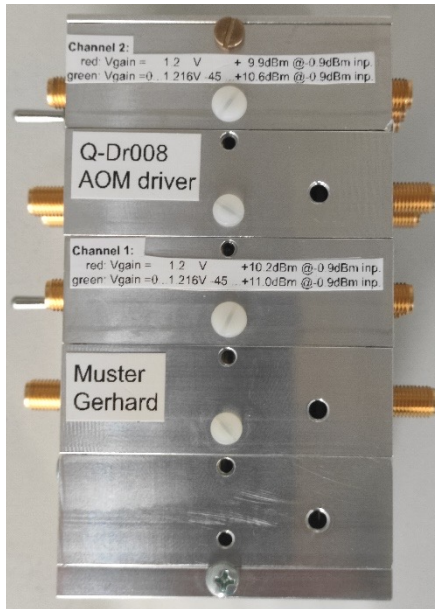

Q-Dr009 – e-lego AOM driver with DDS and VGA and internal & external amp. control

e-lego unit

DL800 (light) + **SU804** + **SU812**

Power Supply | Universal driver Gain | Variable Gain amplifier

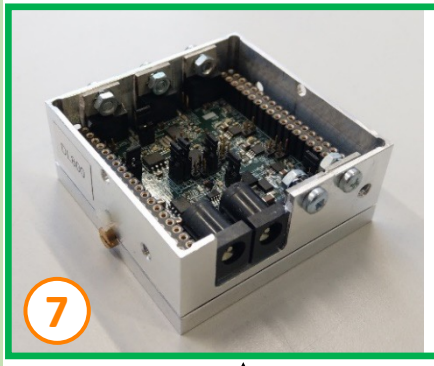

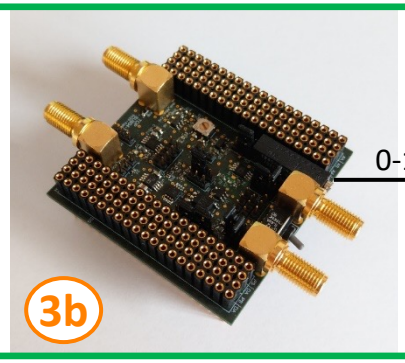

0-1.2V

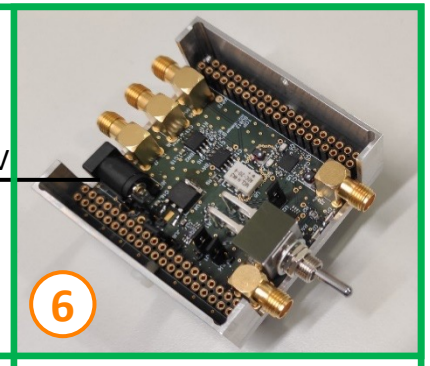

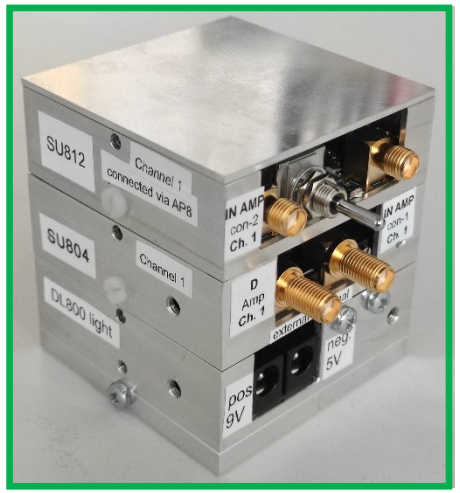

neg: 5V pos: 9V

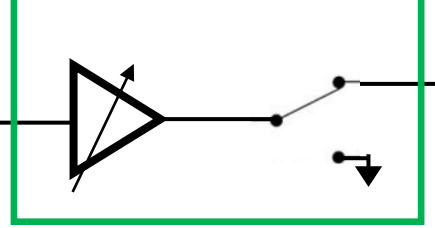

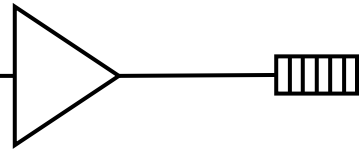

ZHL-5W-1+

Gooch&Housego
AOMO 3110-197

DDS: AS065

Tunable Frequency source | VGA Amplitude control and switch | Power Amplifier | AOM

Q-Dr009 – Jumper and label

L1: PS (DL800) **L2 2: Amp-1** (SU804) **L3: VGA-1** (SU812)

Amplitude Ch.2

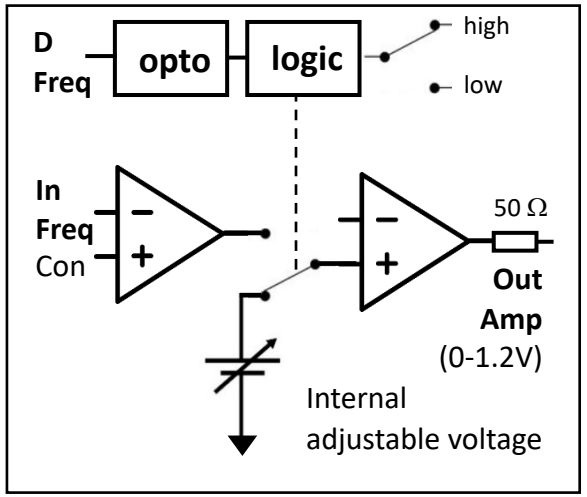

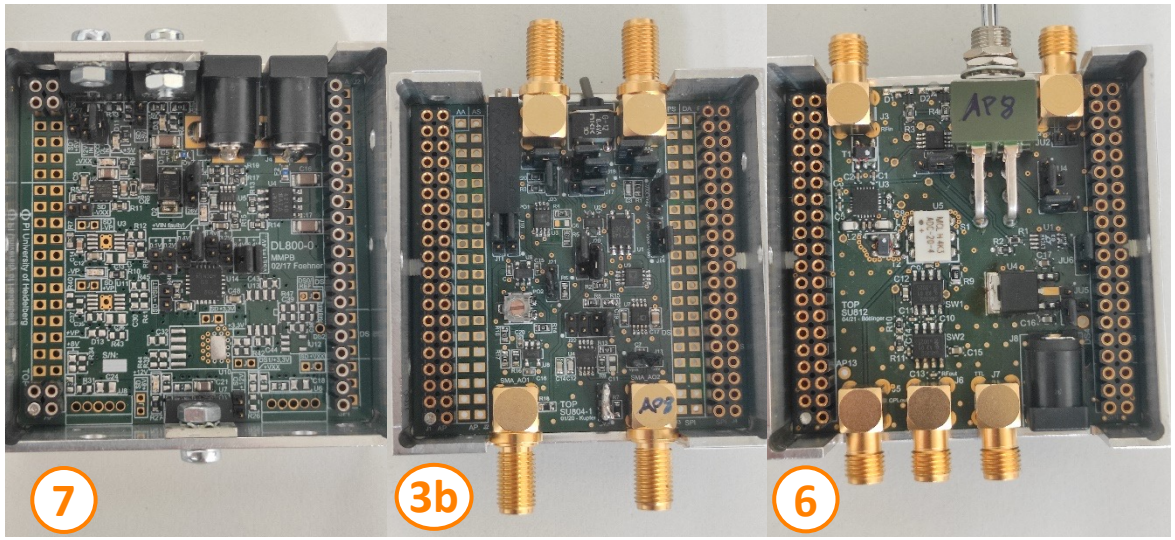

Amplitude Ch.1

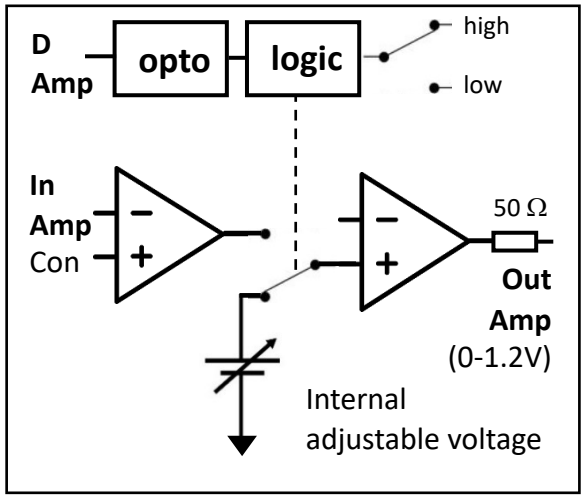

for a detailed layout of the jumper settings see the corresponding page of SU804

front back side 1 side 2

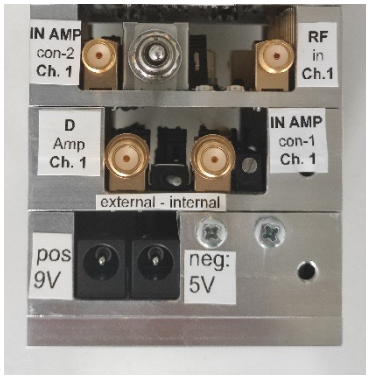

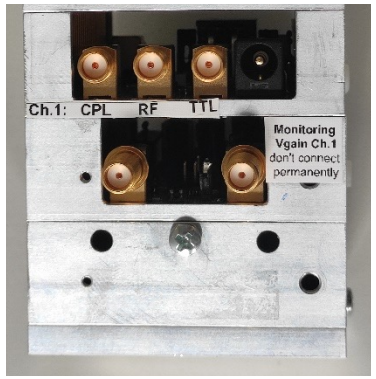

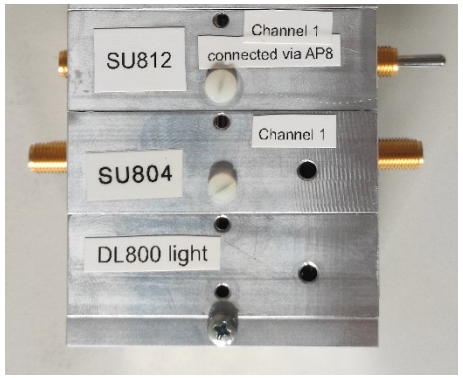

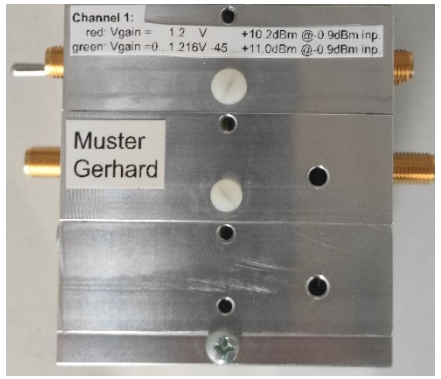

2 x Variable Gain Amplifier

RFin CPLout RFout TTL

Q-Dr010 – e-lego AOM driver with DDS and VGA and external amp. control

e-lego unit

SU812

Variable Gain amplifier

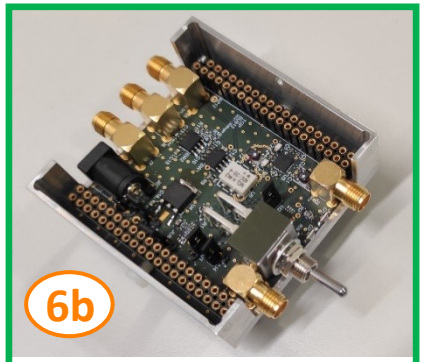

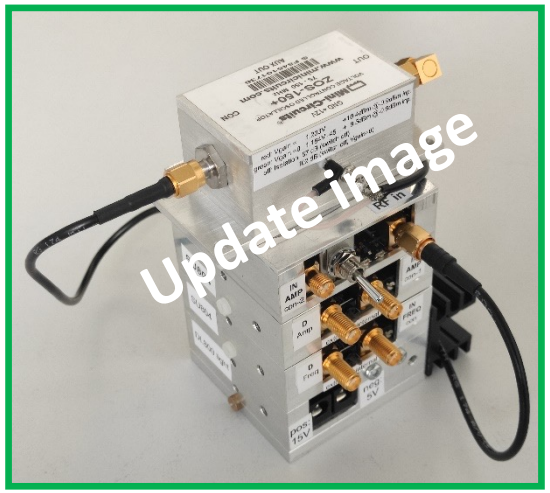

7.5 V →

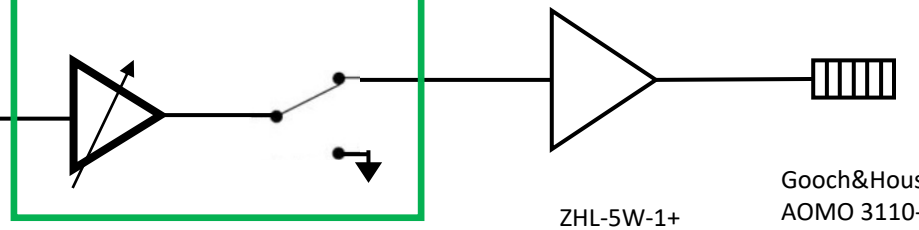

ZHL-5W-1+

Gooch&Housego
AOMO 3110-197

DDS: AS065
Tunable Frequency source

VGA Amplitude control and switch

Power Amplifier

AOM

Q-Dr006: e-lego AOM driver with VCO and mixer and internal & external amp. & freq. control

e-lego unit

DL800 (light) + **SU804** + **SU804** + **SU802**

Power Supply | Universal driver Gain 1.7 | Universal driver Gain | BNC connector

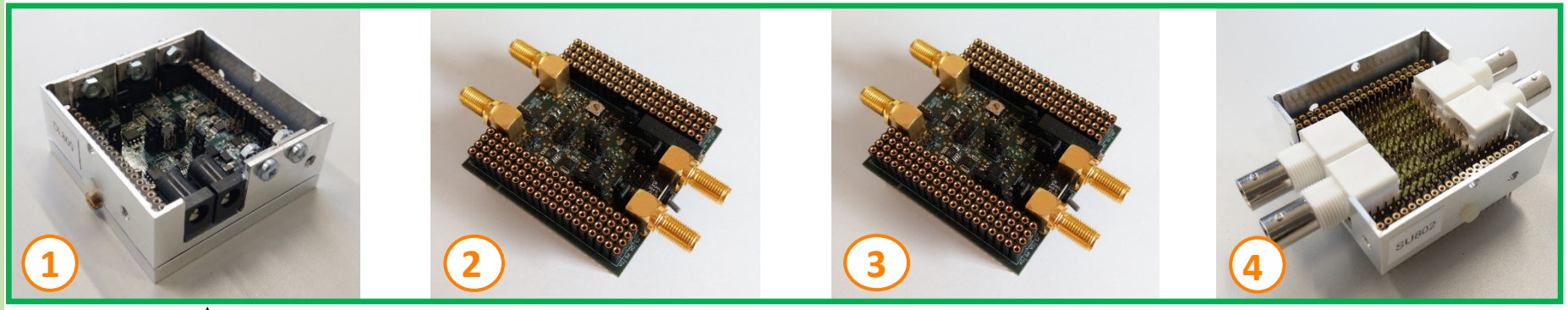

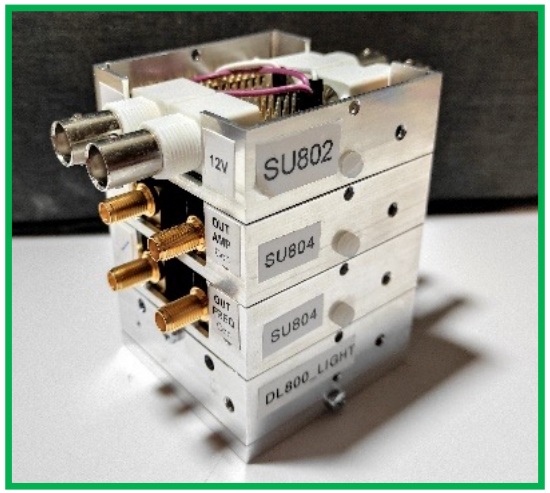

neg: 7.5V pos: 24V

0-17 V

0-1V (50 Ω output impedance)

+12V - 5V +5V

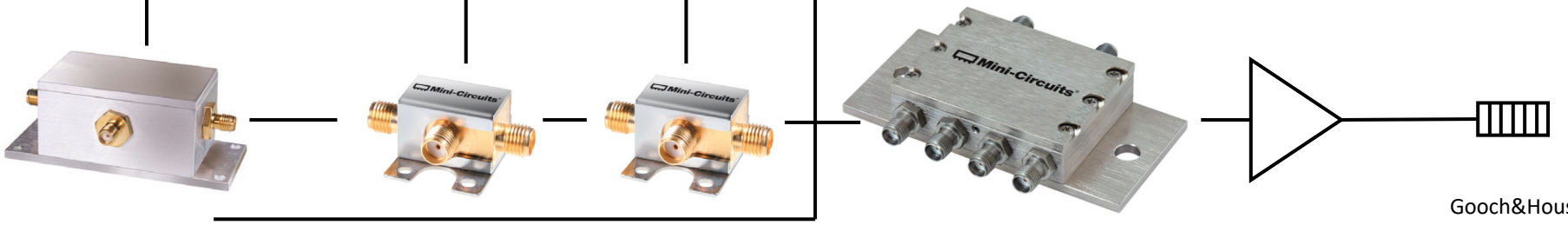

VCO: ZOS 150
Tunable Frequency source

Mixer ZX05-5-S+
Amplitude control

Switch: ZASWA-2-50DRA+
Switch

ZHL-5W-1+
Power Amplifier

Gooch&Housego
AOMO 3110-197
AOM

Q-Dr006 – Jumper and label

Frequency

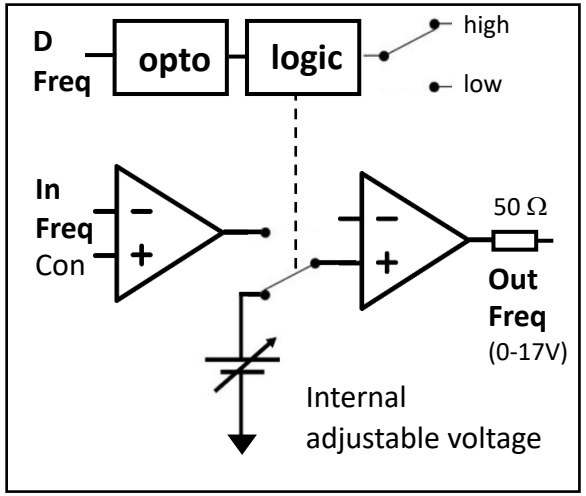

Amplitude

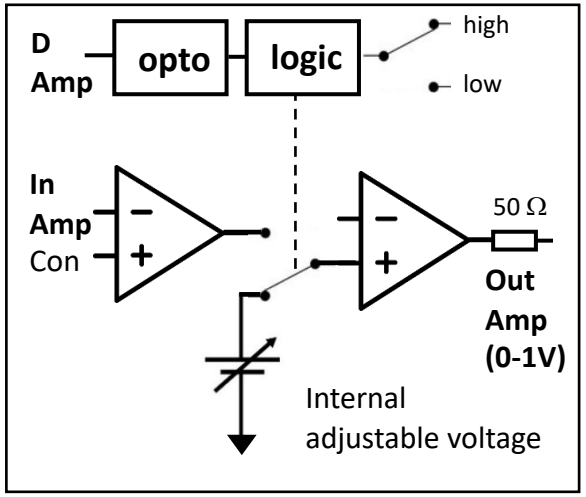

Output Voltages

-5V	+5V	+12 V

Layer 1: PS (DL800) **Layer 2: Freq** (SU804) **Layer 3: Amp** (SU804) **Layer 4: Voltages** (SU802)

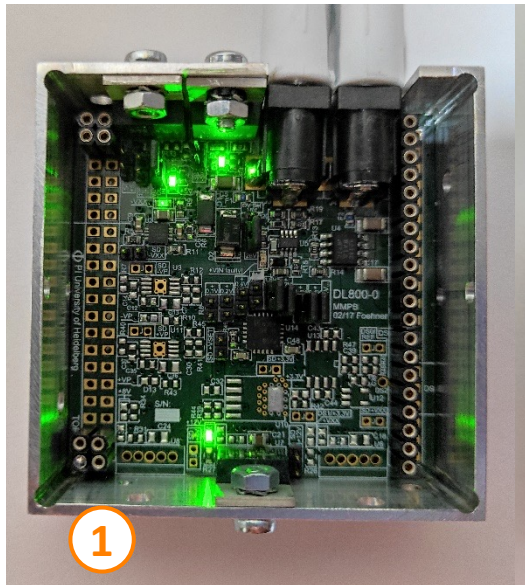

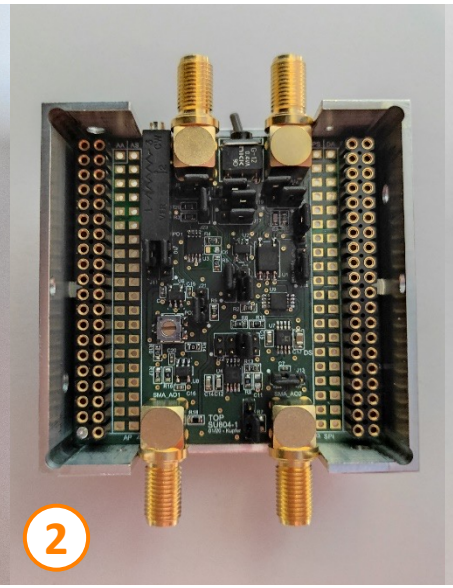

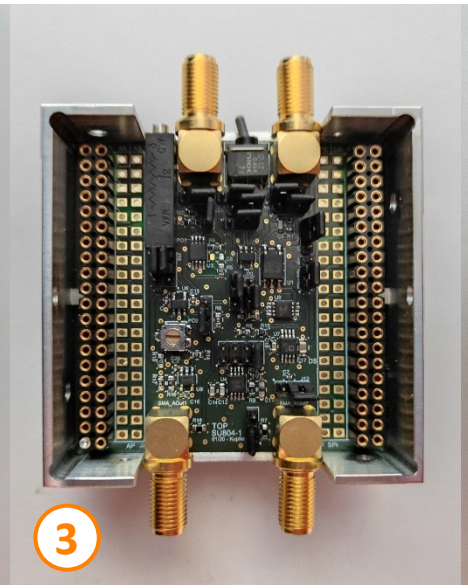

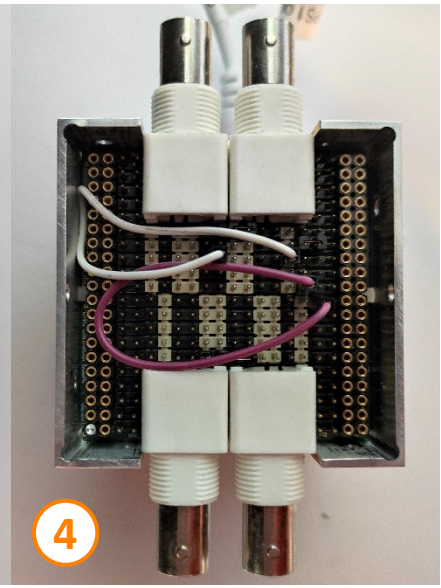

(#) for a detailed layout of the jumper settings see the corresponding page of SU804

overview

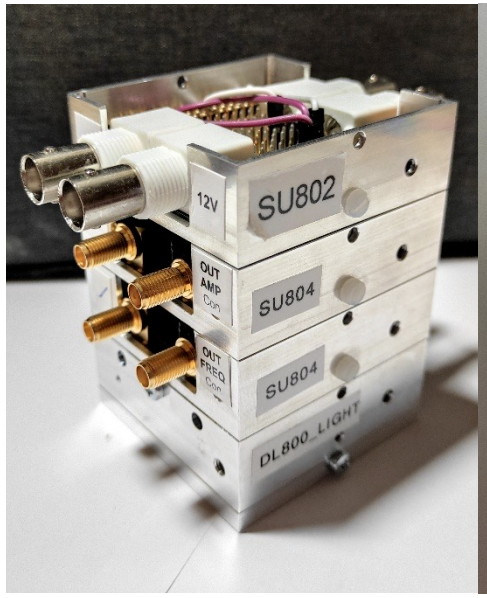

side

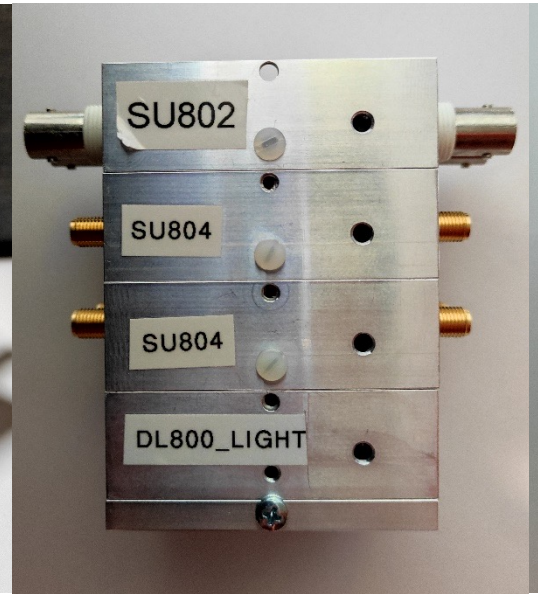

back

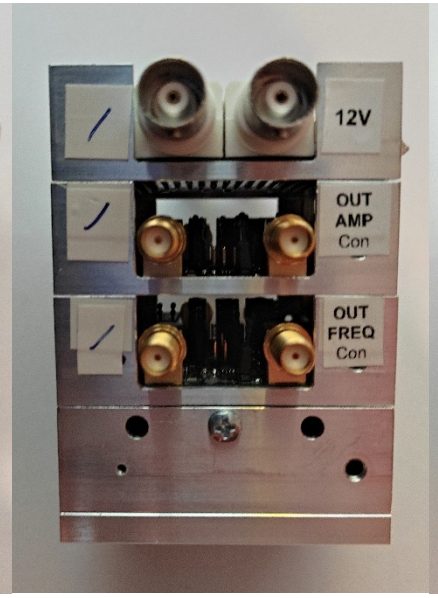

front

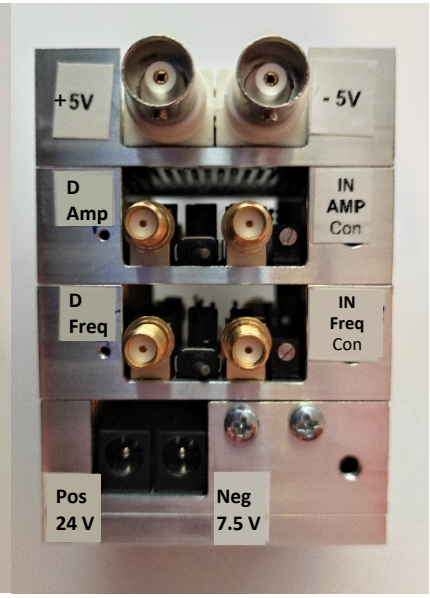

Q-Dr006 - Demonstration kit with 2W ZHL-1-2W Amplifier

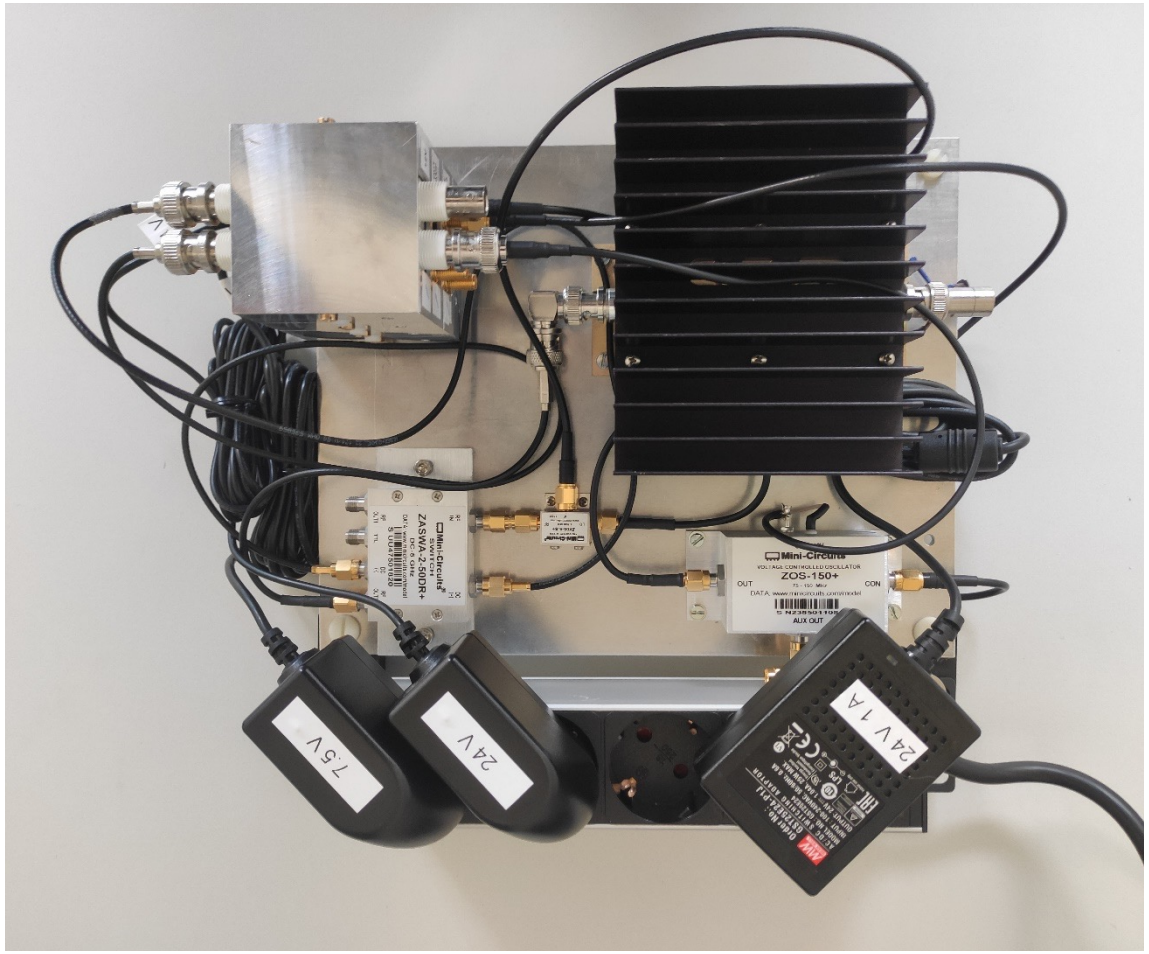

Amplitude module: Setting up the right current for the mixers

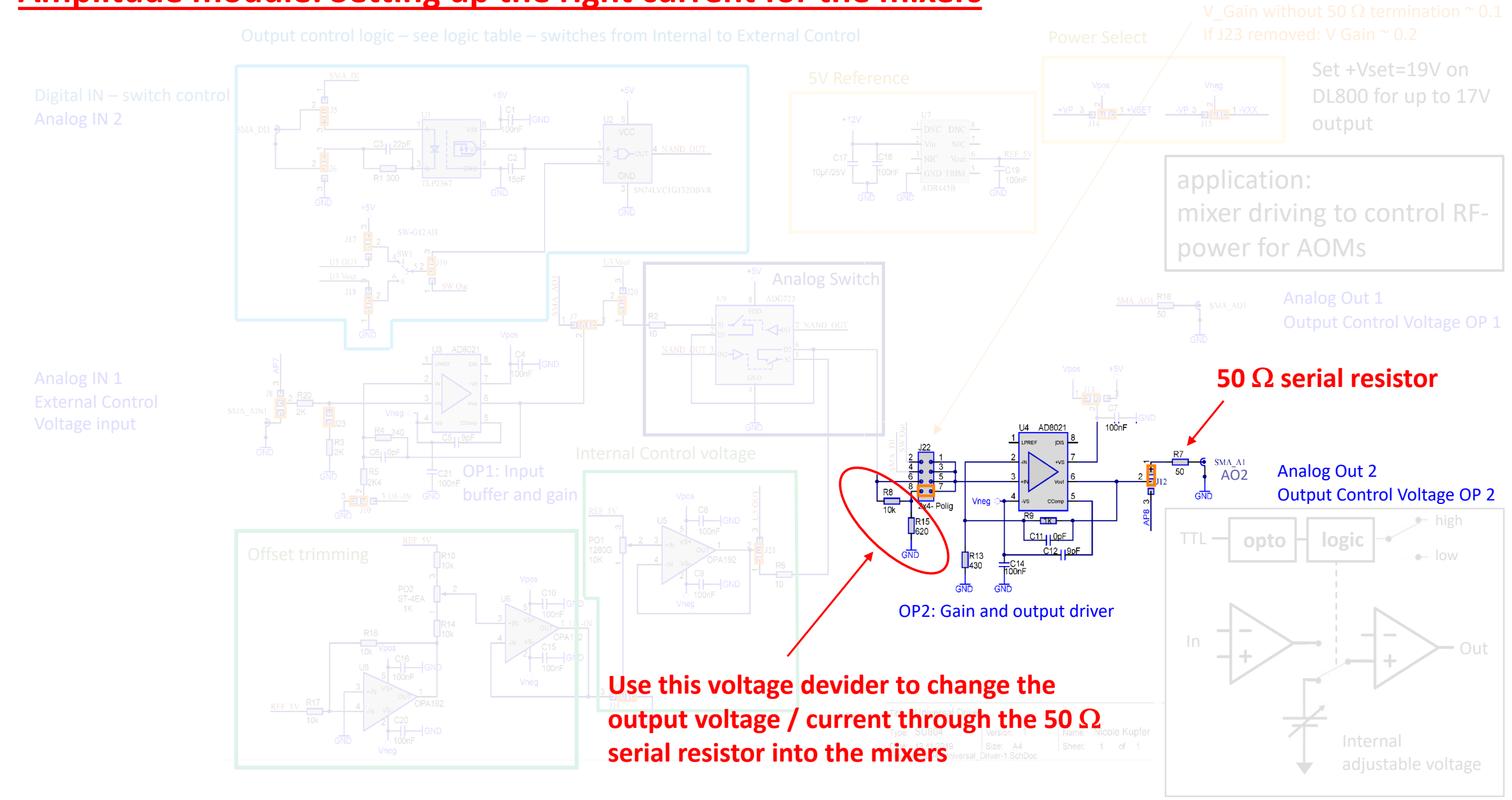

Single mixer ZX05-5-S+ - Output Power versus input voltage at SU804

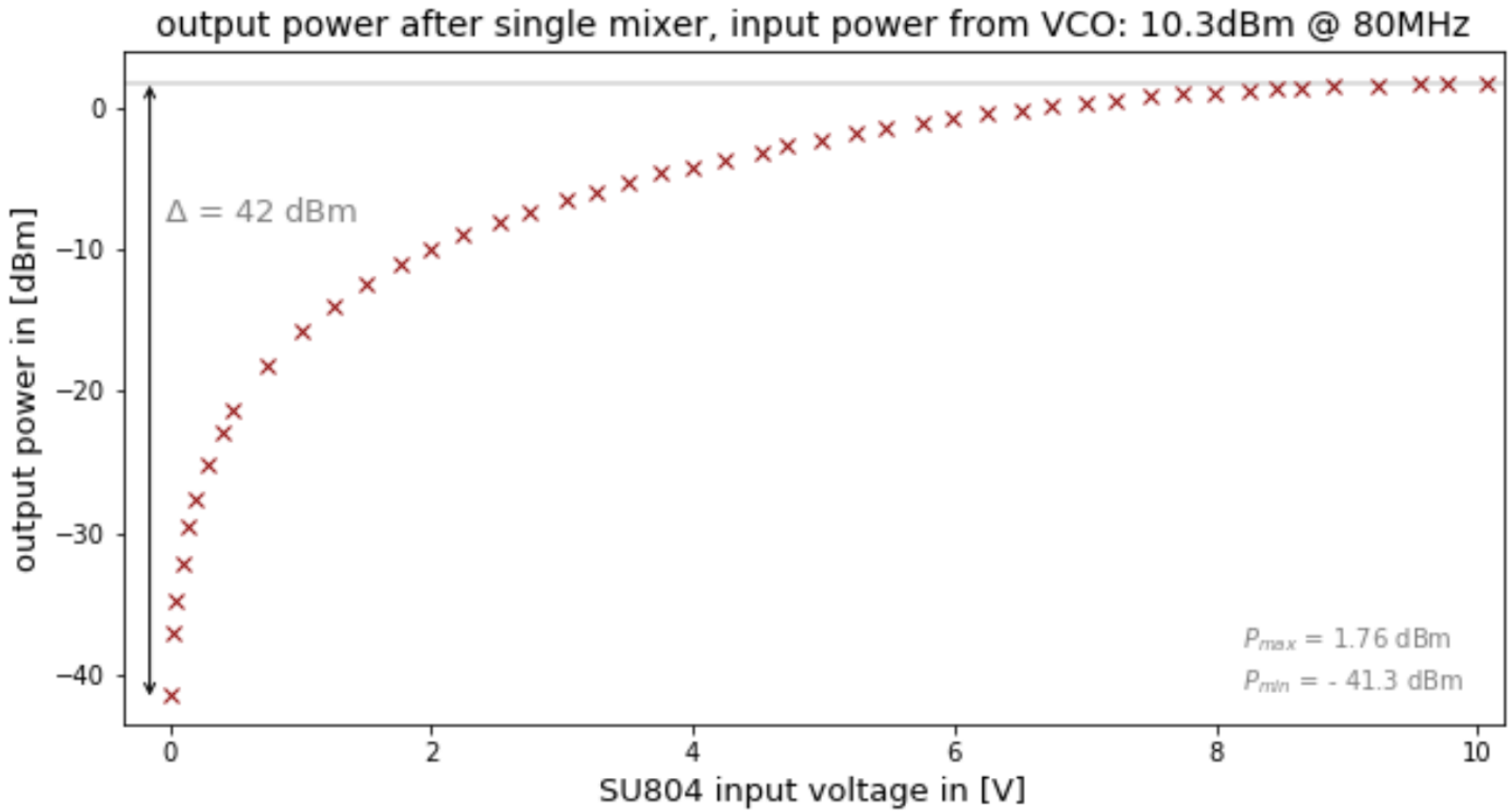

Gain of different Power Amplifiers

Typical Performance Data/Curves — ZHL-5W-1+ / ZHL-5W-1X+

FREQUENCY (MHz)	GAIN (dB)			VSWR (:1)		POUT at 1 dB COMPR. (dBm)	FREQUENCY (MHz)	NOISE FIGURE (dB)
	22V	24V	25V	IN	OUT	24V		24V
5.00	44.82	44.80	44.79	1.41	2.24	38.75	10.00	4.67
10.00	45.77	45.76	45.71	1.18	2.22	39.69	100.00	3.79
50.00	45.99	45.96	45.93	1.12	2.22	39.68	200.00	3.87
100.00	46.37	46.40	46.40	1.09	2.30	39.68	300.00	3.96
140.00	46.26	46.32	46.35	1.19	2.23	39.71	500.00	3.91
180.00	46.13	46.22	46.27	1.26	2.15	39.59		
200.00	46.12	46.16	46.23	1.26	2.16	39.54		
240.00	45.76	45.80	45.87	1.17	2.14	39.58		
260.00	45.32	45.43	45.47	1.14	2.09	39.64		
300.00	44.40	44.48	44.50	1.27	2.01	39.56		
360.00	44.72	44.82	44.87	1.50	2.07	39.49		
400.00	46.08	46.18	46.23	1.48	2.08	39.23		
440.00	45.69	45.81	45.93	1.43	1.88	39.01		
480.00	43.67	43.80	43.92	1.51	1.68	38.11		
500.00	42.93	43.03	43.15	1.51	1.71	37.42		

Gain: 46.4 dB

P_{AOM}: 4 W → 36 dBm

P_{in}= -10.4 dBm

Typical Performance Data/Curves — ZHL-1-2W+

FREQUENCY (MHz)	GAIN (dB)			DIRECTIVITY (dB)			VSWR (:1)		NOISE FIGURE (dB)	POUT at 1 dB COMPR. (dBm)
	23V	24V	24.5V	23V	24V	24.5V	IN	OUT	24V	24V
5.00	32.84	32.87	32.92	25.30	26.00	26.10	1.12	1.51		34.98
11.30	32.45	32.47	32.50	25.90	26.70	26.00	1.10	1.49	6.11	35.08
33.40	32.41	32.42	32.45	25.80	23.80	24.30	1.16	1.49	6.06	35.42
98.80	33.72	33.78	33.83	24.90	25.40	22.60	1.28	1.43	5.63	35.07
195.40	34.00	34.10	34.19	21.90	21.60	22.50	1.41	1.18	5.82	34.36
246.20	33.64	33.73	33.84	20.00	19.90	19.50	1.45	1.11	5.95	34.34
309.60	33.47	33.57	33.67	17.10	17.70	18.00	1.48	1.19	6.09	35.54
373.10	33.77	33.89	34.02	15.90	16.10	17.60	1.51	1.29	6.45	34.85
436.50	33.15	33.35	33.54	17.60	17.20	17.60	1.56	1.37	6.98	34.71
500.00	32.49	32.80	33.14	22.50	20.60	20.80	1.59	1.57	7.28	33.90

Gain: 33.8 dB

P_{AOM}: 2 W → 33 dBm

P_{in}= 0.8 dBm

V187

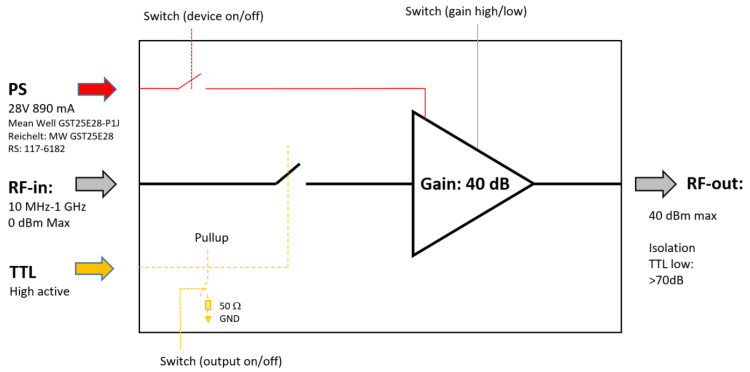

Gain: 43.4 dB @ 100 MHz

P_{AOM}: 4 W → 36 dBm

P_{in}= -7.4 dBm

Q-Dr012 Modular AOM driver with DDS and two mixers for 80 dB dynamic range

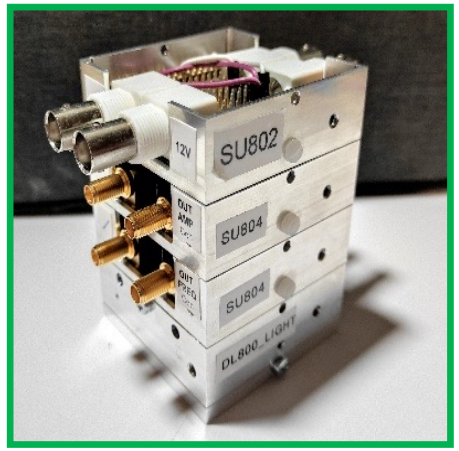

Ethernet

Logic Box, NI system or Adwin

Digital out

Ch1 Analog out Ch2

e-lego

DL800 (light) + **SU804** + **SU804** + **SU802**

Power Supply | Universal driver Gain < 1 | Universal driver Gain < 1 | BNC connector

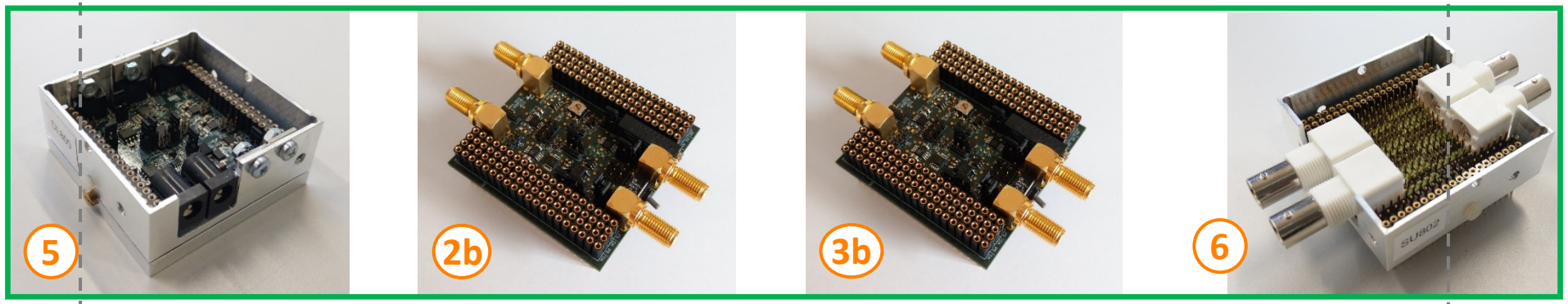

0-1 V (50 Ω output impedance)

0-1V (50 Ω output impedance)

- 5V +5V

DDS

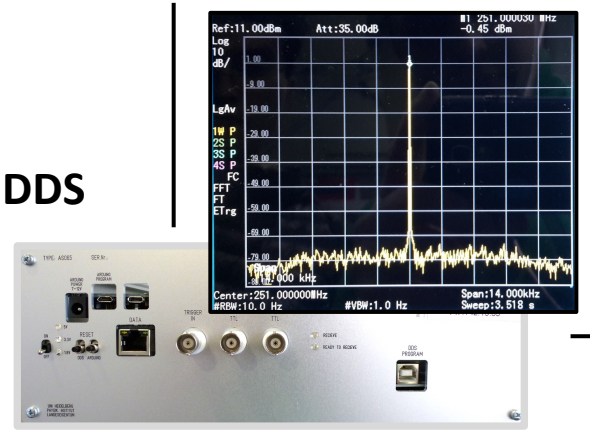

AS065 based on AD9914

LO IF

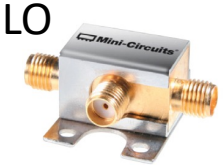

Mixer ZX05-5-S+
Amplitude control

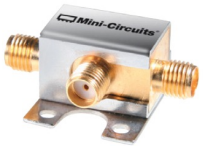

Mixer ZX05-5-S+
Amplitude control

Switch: ZASWA-2-50DRA+
Switch

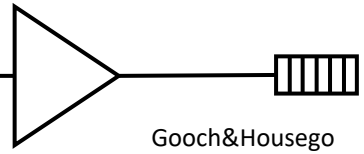

ZHL-5W-1+
Power Amplifier

Gooch&Housego
AOMO 3110-197
AOM

e-lego unit

Q-Dr011 – e-lego AOM driver with DDS and VGA and external amp. control

e-lego unit

DL800 + **SU807** **SU800+VV67** + **SU812**

Power Supply | PI controller | Photodiode | Variable Gain amplifier

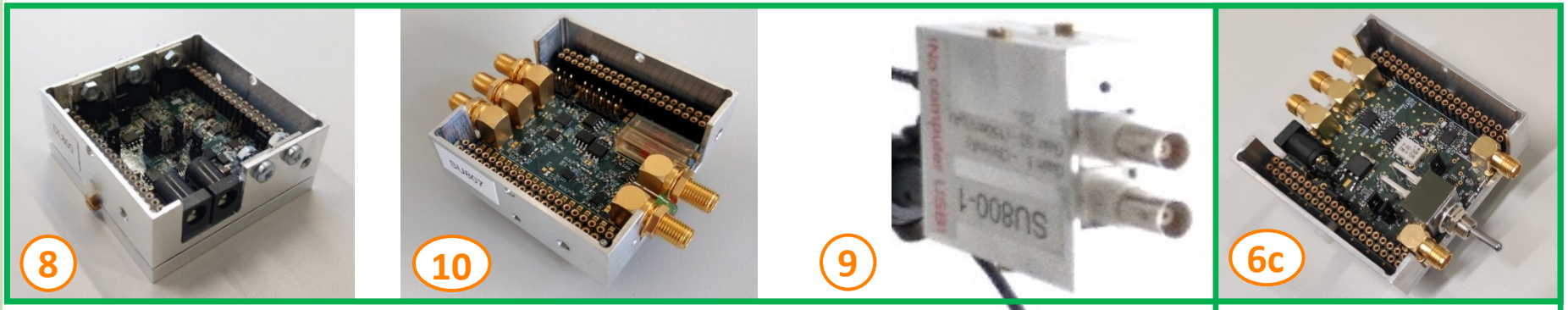

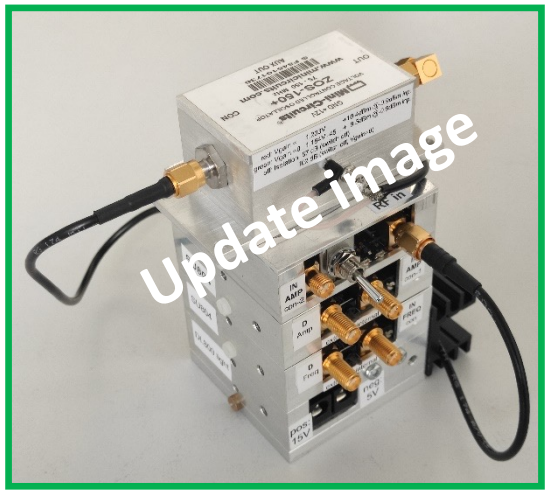

neg: 7.5V pos: 15V
+ heat sinks

DDS: AS065
Tunable Frequency source

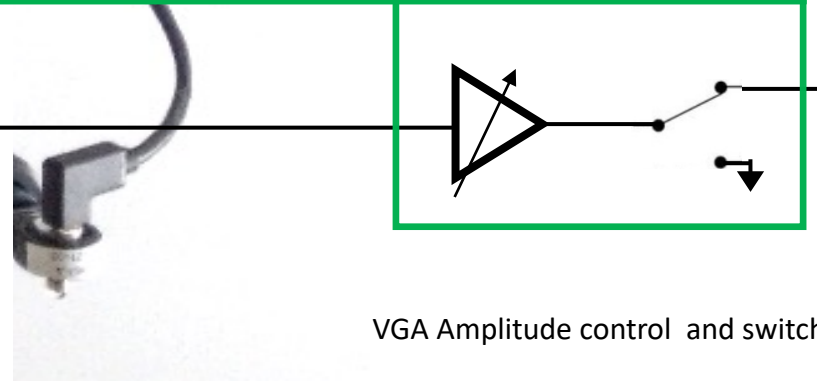

VGA Amplitude control and switch

ZHL-5W-1+

Power Amplifier

Gooch&Housego
AOMO 3110-197

AOM

SU807-2
PI-Controller

Jumper
for PD input

10

Input

Error

P,I

Output adder

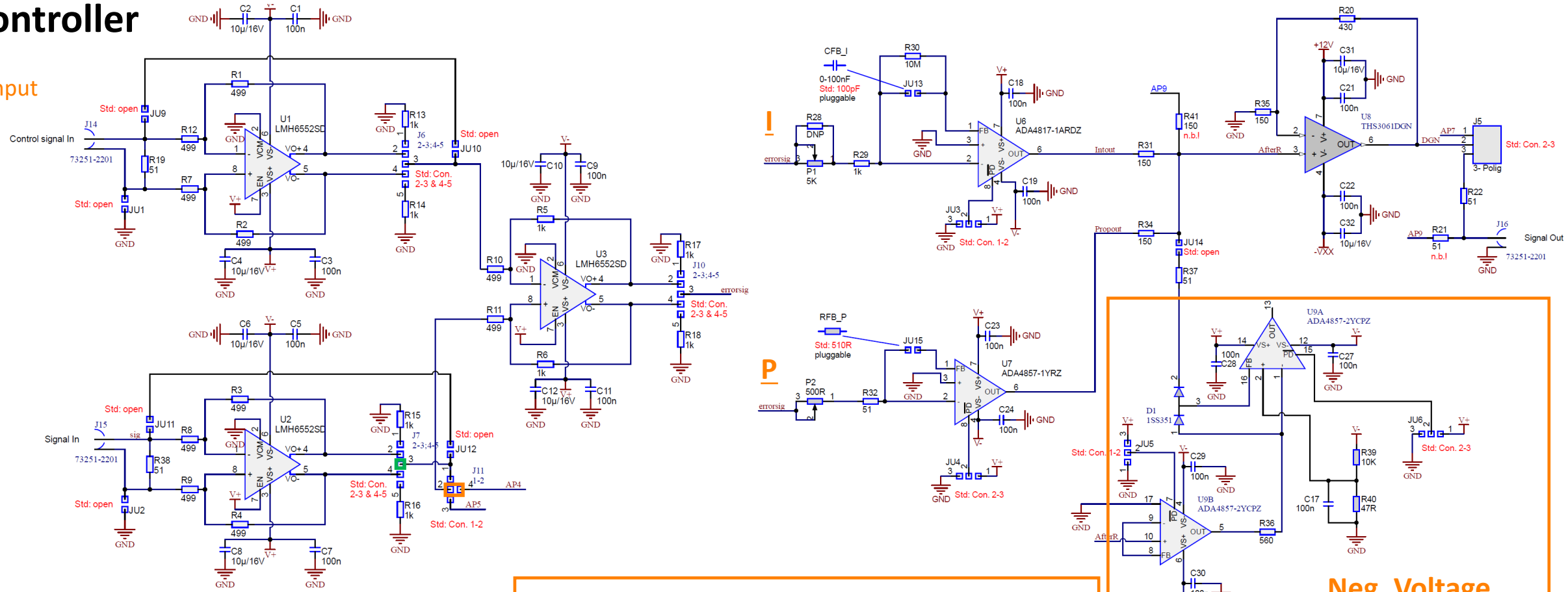

Neg. Voltage Limiter

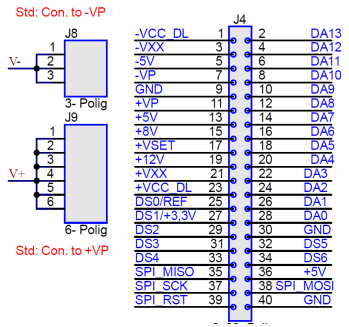

Supply voltage select

-(V-) + (V+) must not exceed 13.2V
(abs max LMH6552)

if -Vp and +Vp do not supply enough current (max 150mA, load depening on load of monitor) use [-5V,+5V] or [-5V, Vset=+6V]

Monitors

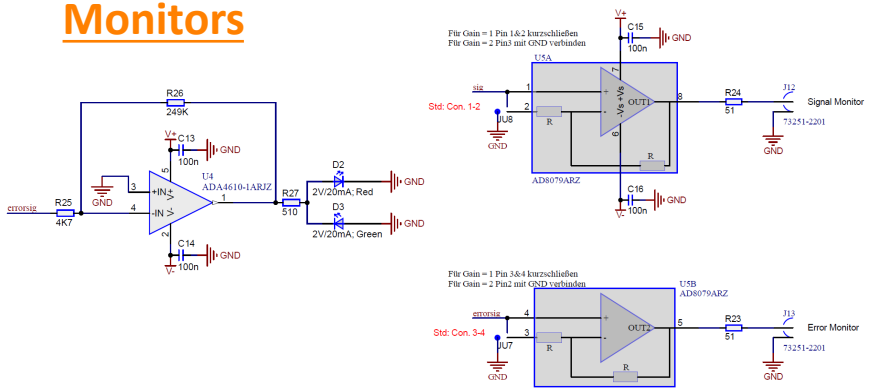

\\147.142.16.140\geraete\geraete\SU\SU807_PI_Controller

Power Supplies

SU800

9

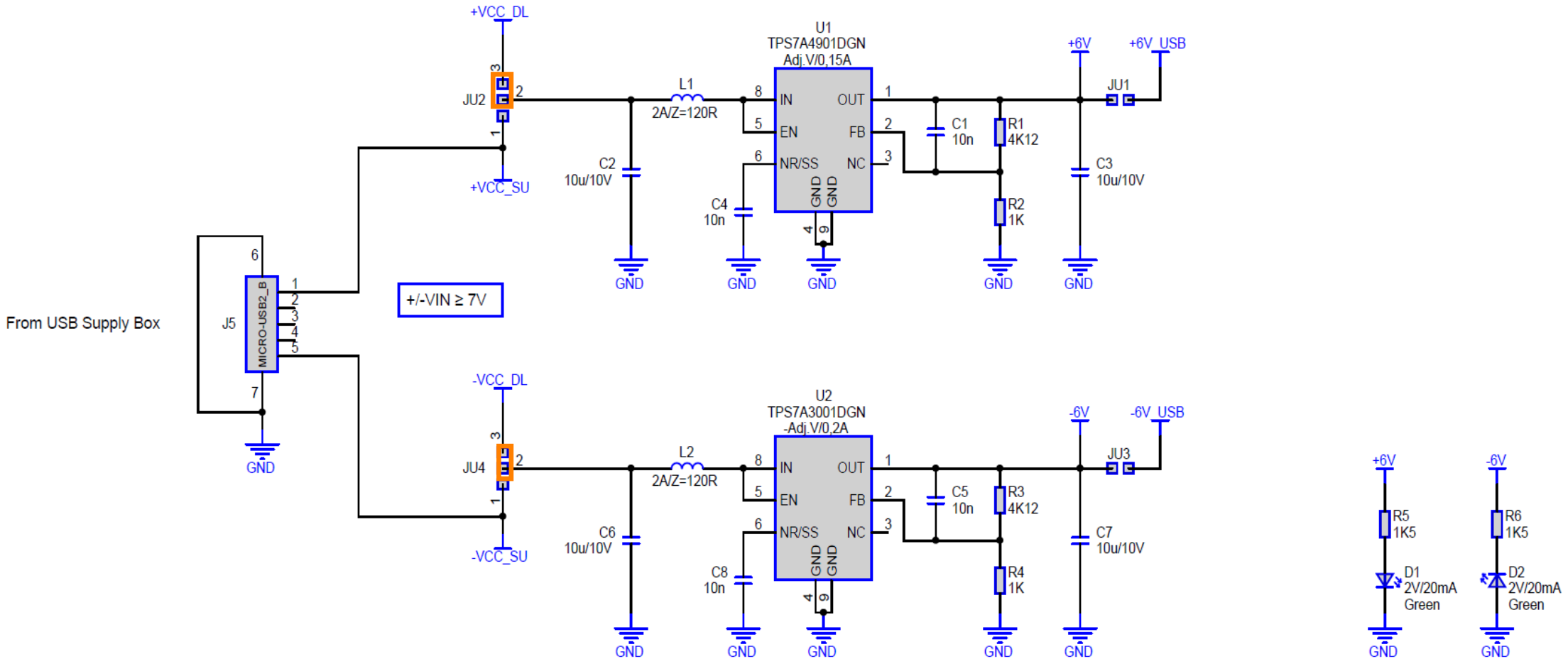

9

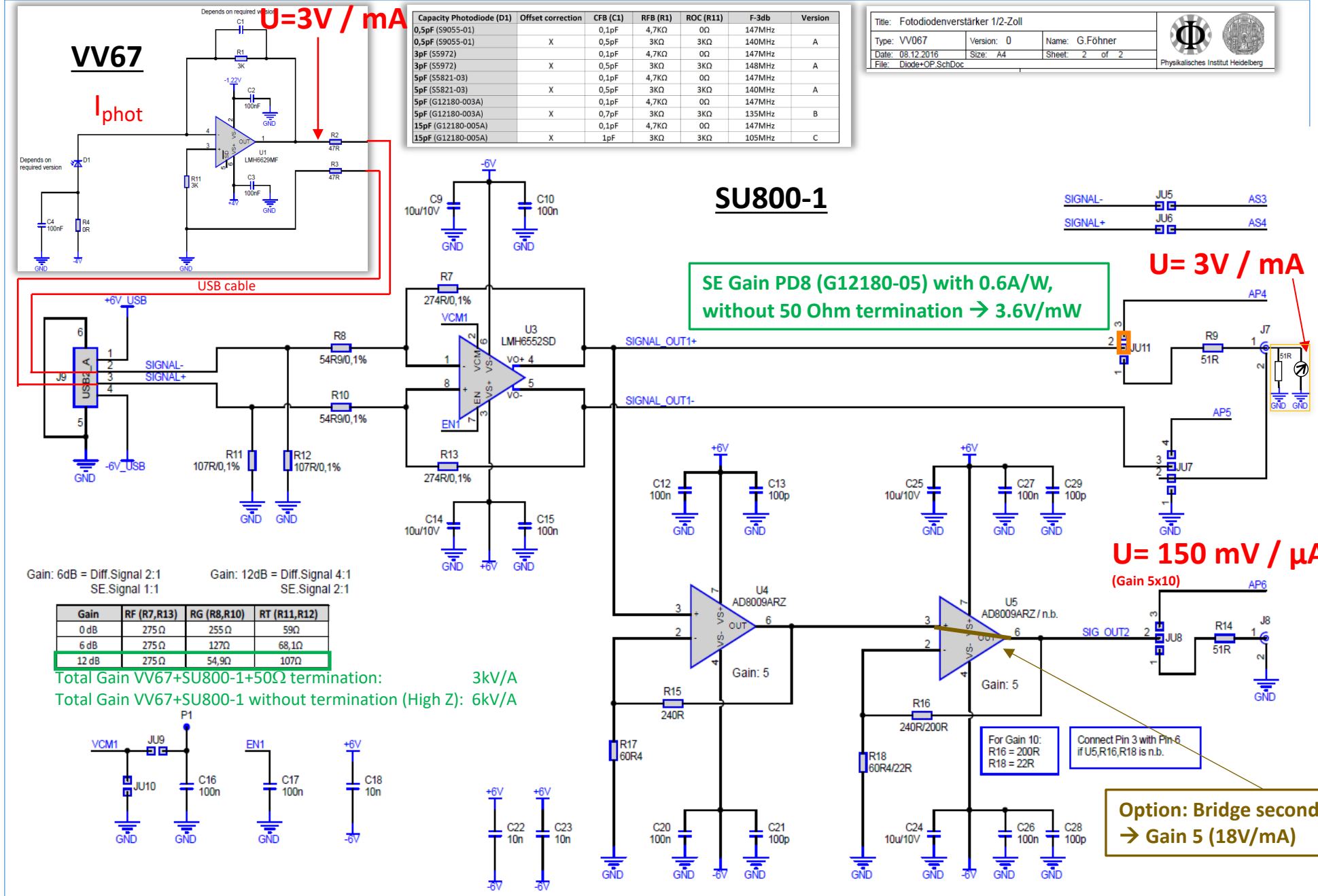

Capacity Photodiode (D1)	Offset correction	CFB (C1)	RFB (R1)	ROC (R11)	F-3db	Version
0,5pF (S9055-01)		0,1pF	4,7KΩ	0Ω	147MHz	
0,5pF (S9055-01)	X	0,5pF	3KΩ	3KΩ	140MHz	A
3pF (S5972)		0,1pF	4,7KΩ	0Ω	147MHz	
3pF (S5972)	X	0,5pF	3KΩ	3KΩ	148MHz	A
5pF (S5821-03)		0,1pF	4,7KΩ	0Ω	147MHz	
5pF (S5821-03)	X	0,5pF	3KΩ	3KΩ	140MHz	A
5pF (G12180-003A)		0,1pF	4,7KΩ	0Ω	147MHz	
5pF (G12180-003A)	X	0,7pF	3KΩ	3KΩ	135MHz	B
15pF (G12180-005A)		0,1pF	4,7KΩ	0Ω	147MHz	
15pF (G12180-005A)	X	1pF	3KΩ	3KΩ	105MHz	C

Title: Fotodiodenverstärker 1/2-Zoll		
Type: VV067	Version: 0	Name: G.Föhner
Date: 08.12.2016	Size: A4	Sheet: 2 of 2
File: Diode+OP.SchDoc		

Physikalisches Institut Heidelberg

Gain	RF (R7,R13)	RG (R8,R10)	RT (R11,R12)
0 dB	275 Ω	255 Ω	59Ω
6 dB	275 Ω	127Ω	68,1Ω
12 dB	275 Ω	54,9Ω	107Ω

\VV\VV067_Fotodiodenverstärker 0,5-Zoll\Entwicklung\PDF
\SU\SU800_Dual_Channel_Photodiode_Buffer\SU800-1\Entwicklung\PDF

Title: Dual Channel Photodiode Buffer		
Type: SU800	Version: 1	Name: G.Föhner
Date: 08.12.2016	Size: A4	Sheet: 2 of 3
File: SU800-1 Buffers.SchDoc		

Physikalisches Institut Heidelberg

Jumper settings SU800-2

9

Set orange Jumper

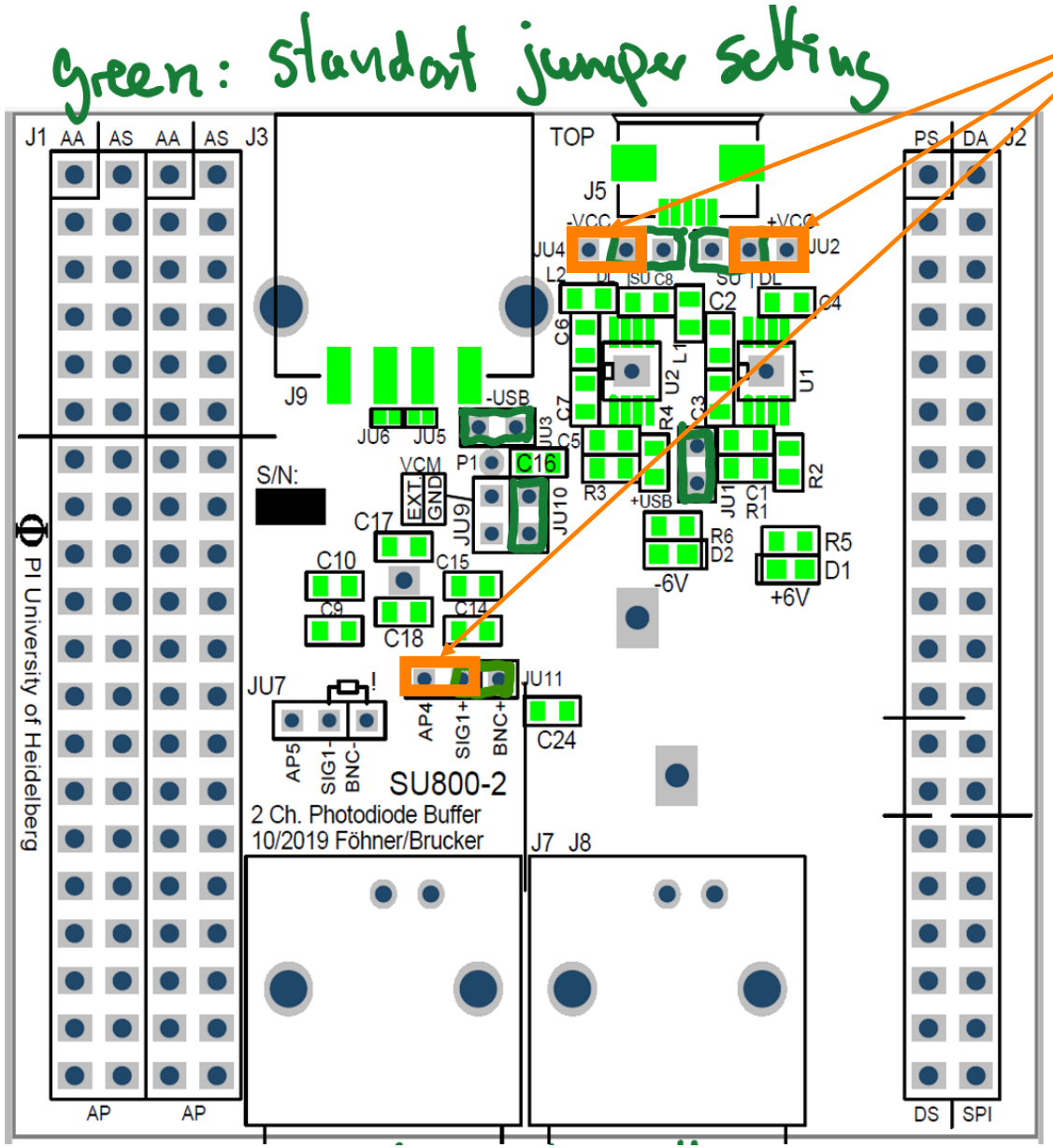

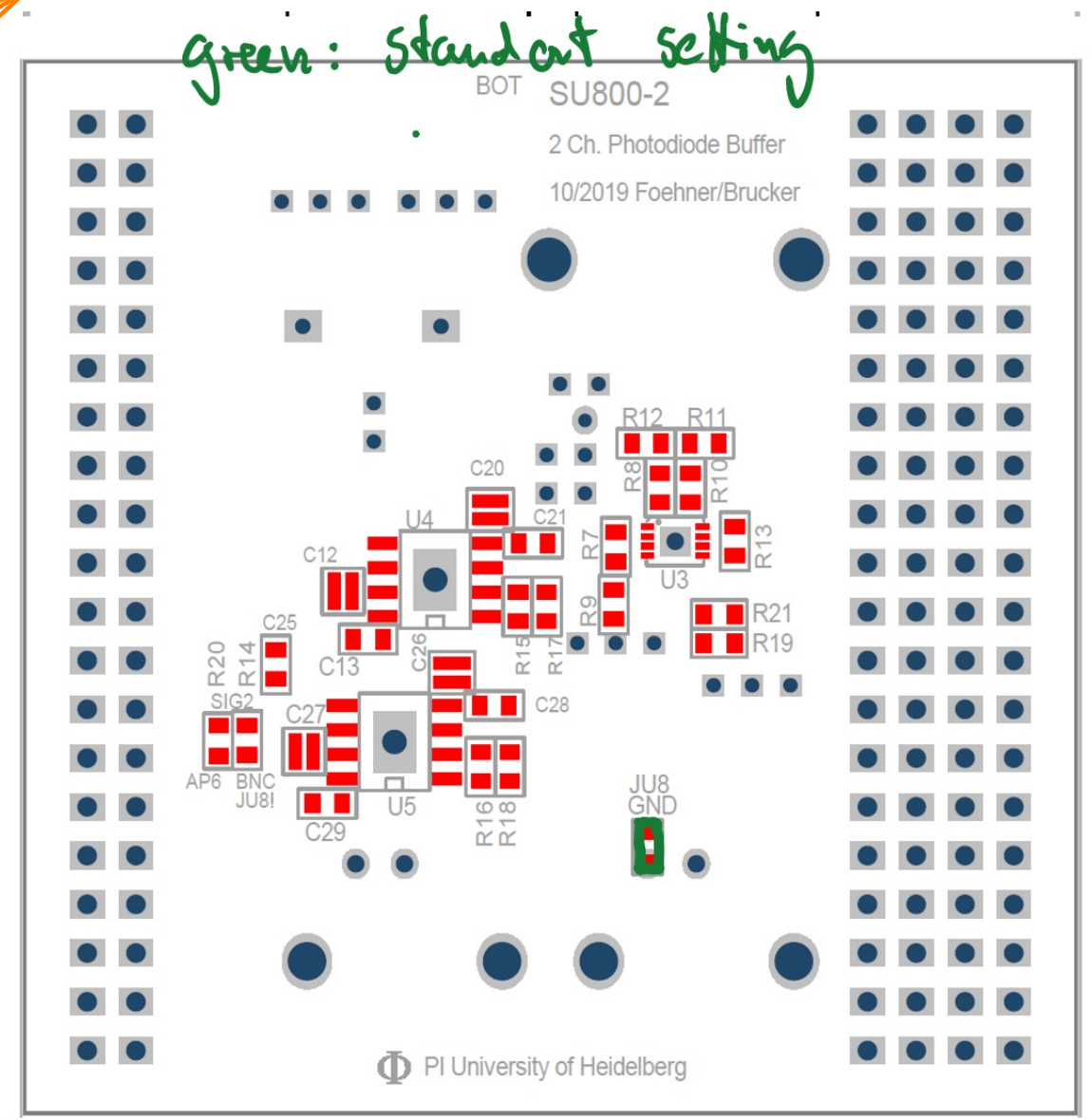

VGA SU812:

Get control input from AP4

6c

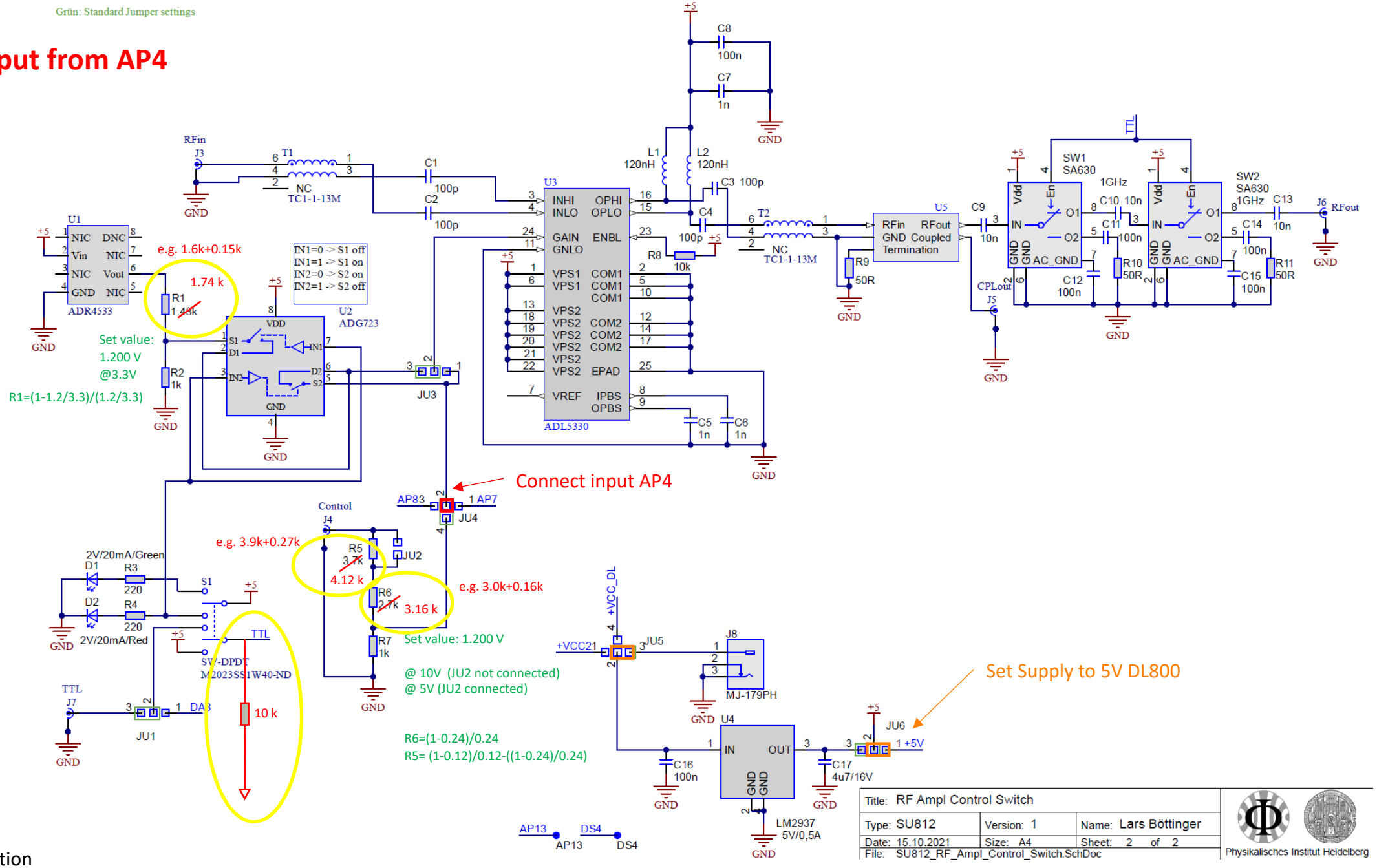

Documentation

[\\pi2\geraete\Geraete\SU\SU812_RF_Ampl_Control_Switch\Entwicklung\PCB\Project Outputs for SU812_RF_Ampl_Control_Switch](\\pi2\geraete\Geraete\SU\SU812_RF_Ampl_Control_Switch\Entwicklung\PCB\Project Outputs for SU812_RF_Ampl_Control_Switch)

VGA SU812:

Get control input from AP4

6c

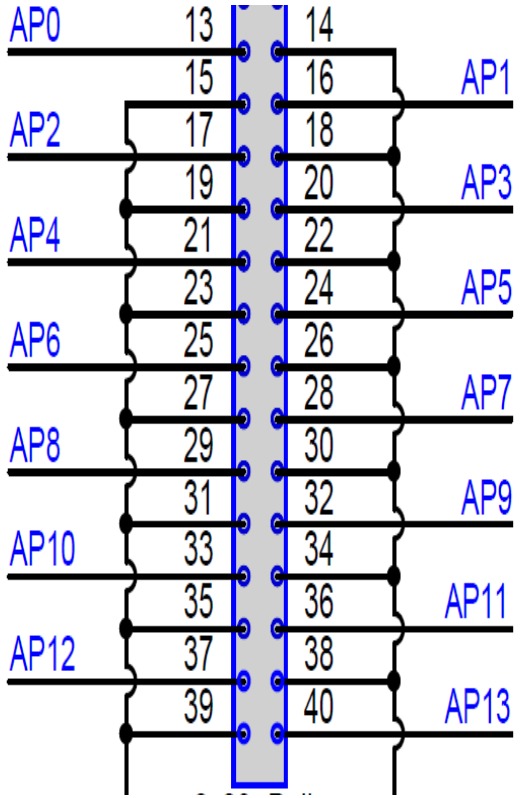

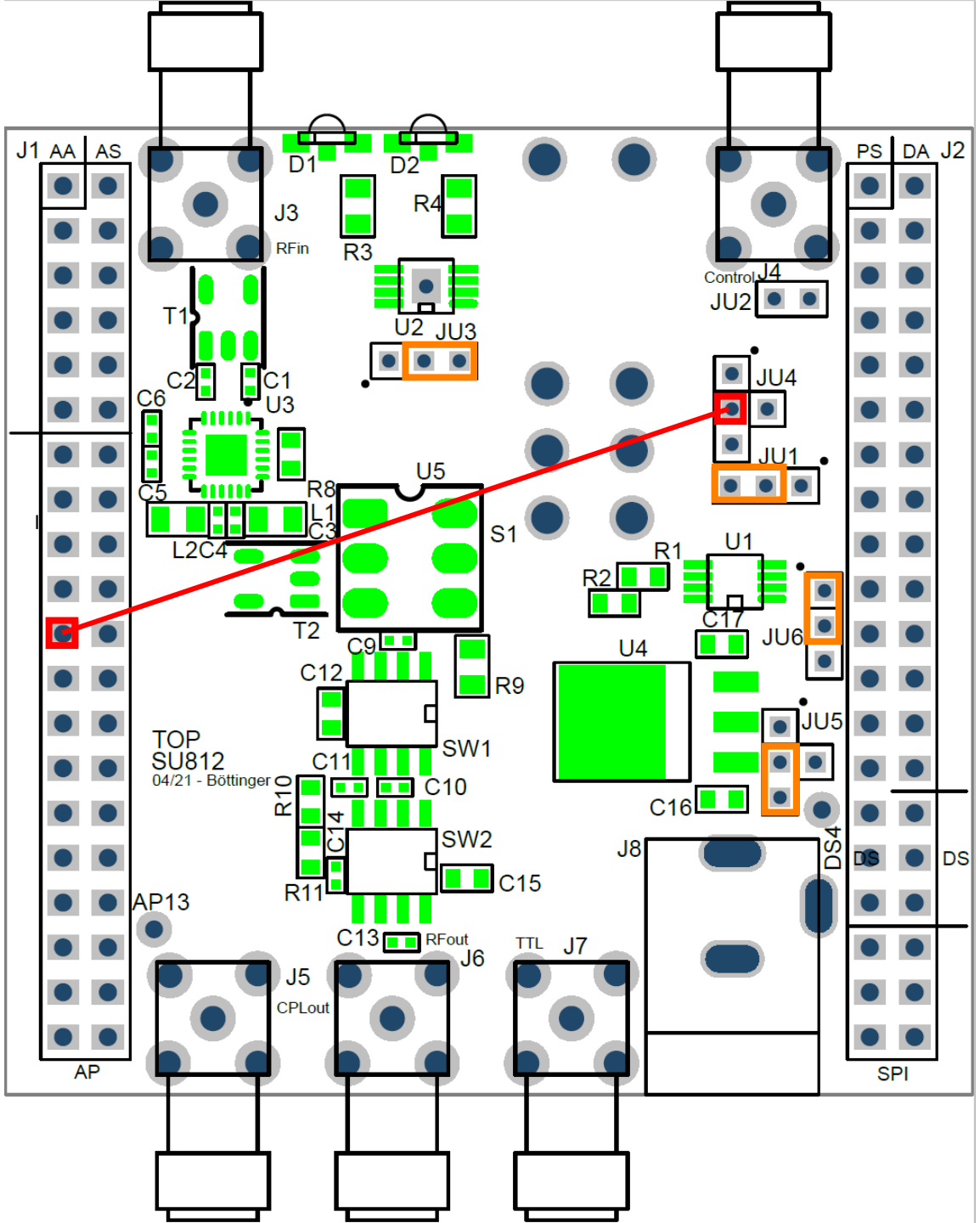

e-lego module

Variable Gain Amplifier – SU812

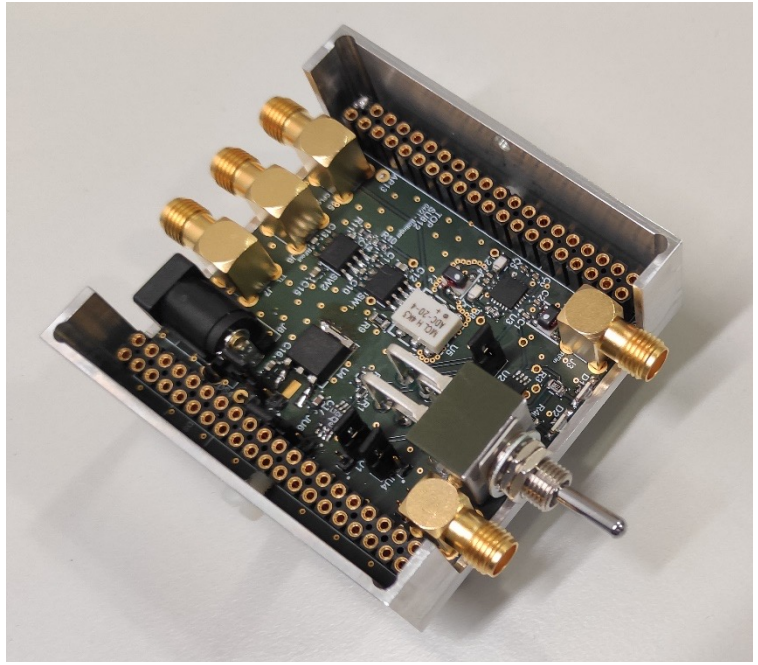

- **Variable Gain: -45 dB ... +10 dB → dynamical range: 55 dB**. Gain controlled via control voltage Vgain. Log[Output Power] is linear in Vgain. Vgain can be applied externally or from another e-lego board, e.g. SU804 or SU807 (JU4)
- Input 1dB compression point: 3dBm → use about 0 dBm input level
- Standard **Vgain setting: 1.2V → Overall gin =10dB**
- Control signal ranges: 0-5V or 0-10V which is scaled to Vgain = 0 - 1.2V. Range can be selected by Jumper JU2
- **5.5dB/V @ 0-10V input, 11 dB/V @ 0-5V input**
- Power input via Hohlstecker or from DL800 / DL801 (select via Jumper JU5 and JU6)
- **Isolation: 87 dB** (switch off)
  102 dB (switch off, Vgain=0)
- **Modes, set by the manual switch**
  1) RF-switch controlled by TTL and gain by external Voltage
  2) Contineously ON at 10 dB gain
  3) Switch off

Application:
- RF Amplitude control plus RF switch for AOMs

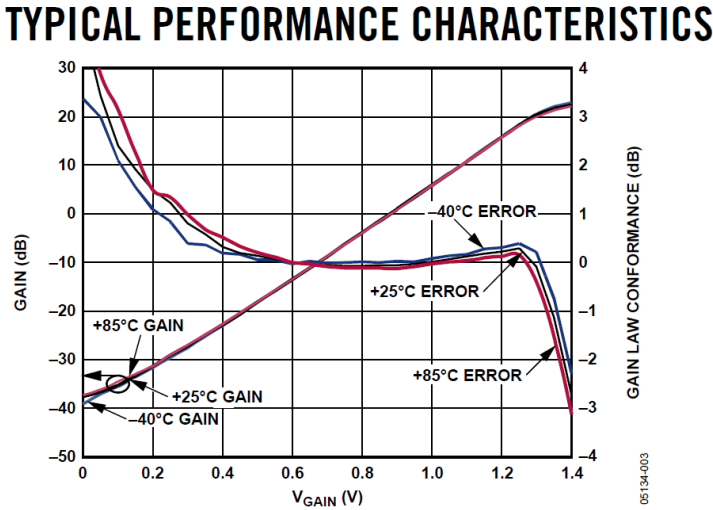

Figure 3. Gain and Gain Law Conformance vs. V_{GAIN} over Temperature at 100 MHz

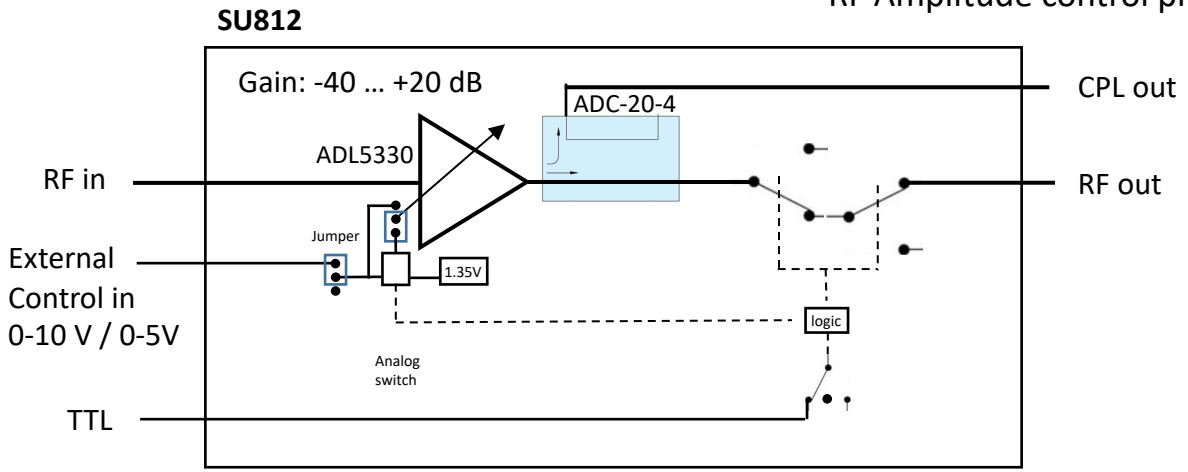

Position manual switch	RF Switch	Gain Control voltage Vgain
Green LED: TTL	Set by TTL level	External control voltage (0-5V or 0-10V input is scaled down to Vgain 0-1.2V to control the Gain of the ADL5330
RED LED:	ON	Gain set to maximum, i.e. to about +10 dB by setting Vgain to 1.2V
No LED on.	OFF	

Variable Gain Amplifier – SU812

Phase noise

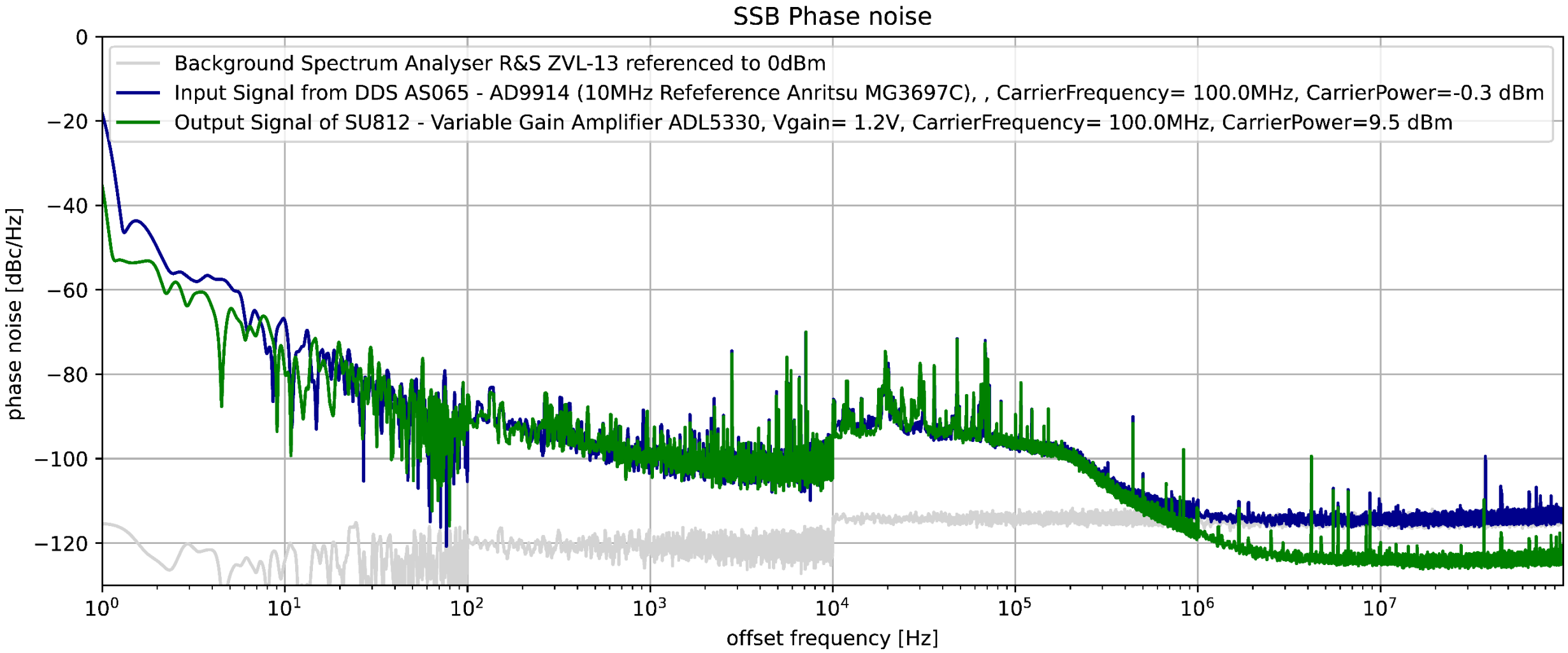

Variable Gain Amplifier – SU812

Gain Profile Vgain=1.2 V

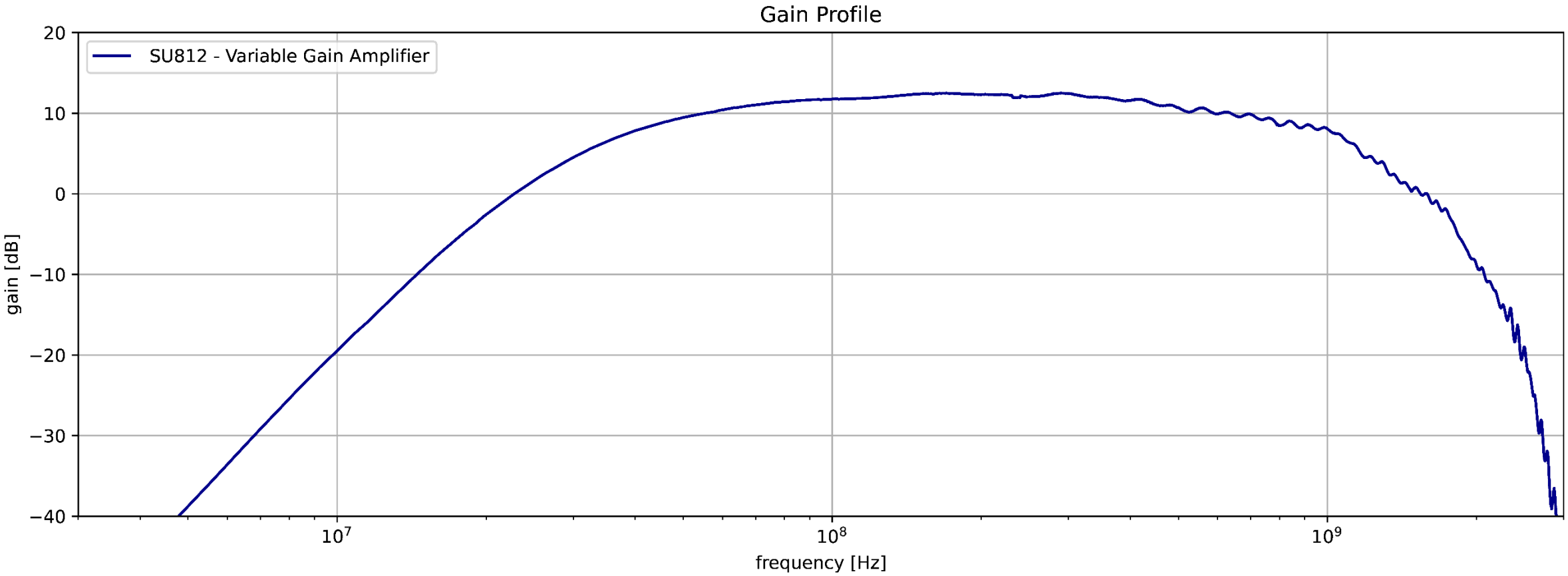

Variable Gain Amplifier – SU812

Switching speed, taken from datasheet SA630

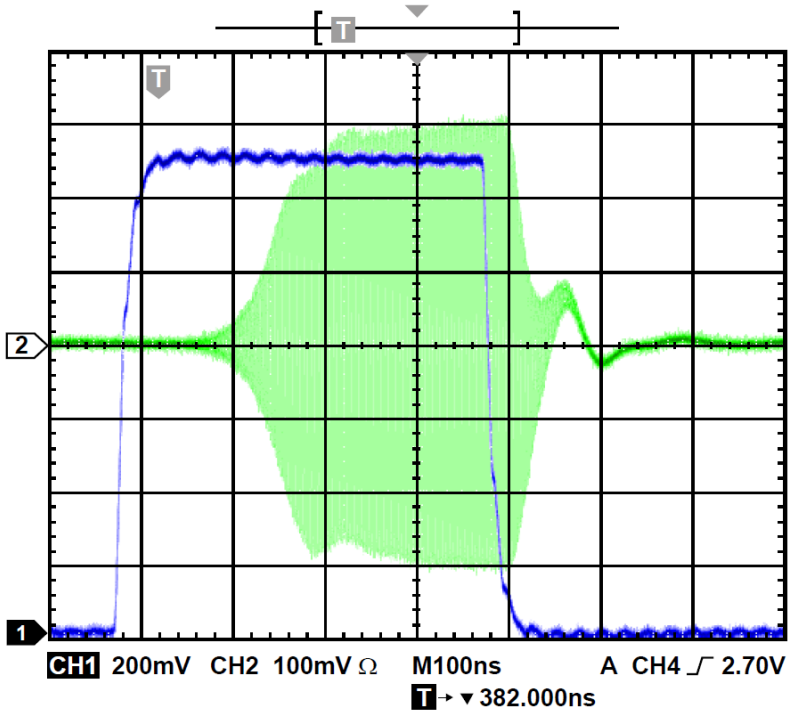

Figure 14. Step Response of Gain Control Input

t_D	Switching speed (on-off delay)	50% TTL to 90/10% RF		20		ns
t_r, t_f	Switching speeds (on-off rise/fall time)	90%/10% to 10%/90% RF		5		ns

Gain and noise figure, taken from datasheet ADL5330

Input: 0 dBm

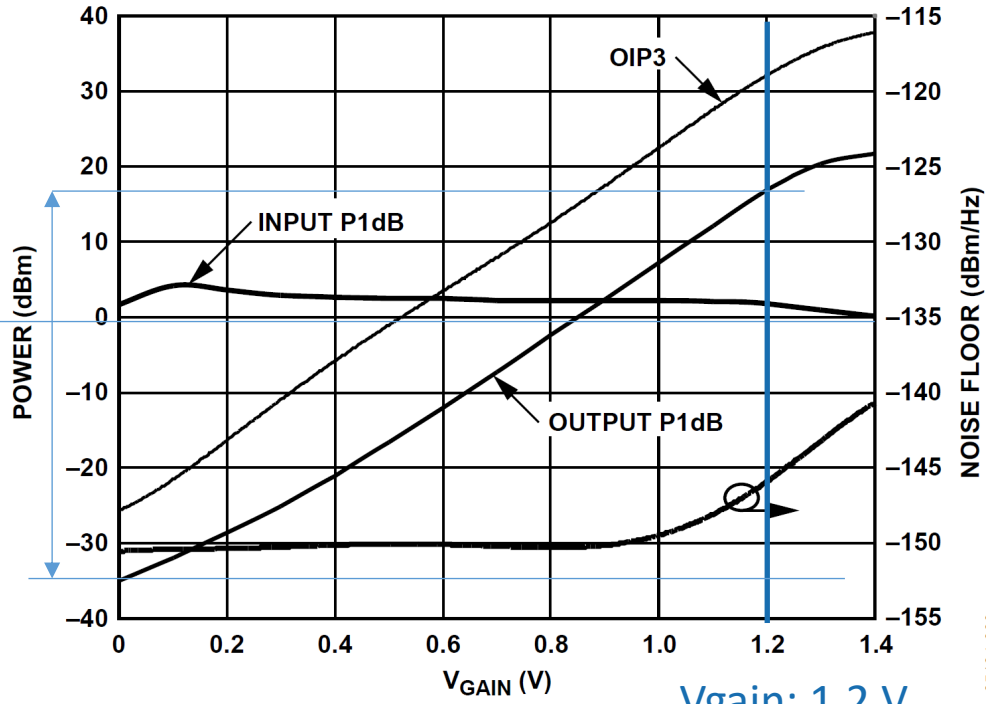

Vgain: 1.2 V

Figure 9. Input Compression Point, Output Compression Point, OIP3, and Noise Floor vs. V_{GAIN} at 100 MHz

Slope: ~ 55dB / 1.2Vgain

→ 5.5dB/V @ 0-10V control input

→ 11 dB/V @ 0- 5V control input

VGA SU812:

Get control input from SU804 Universal driver via AP8

6

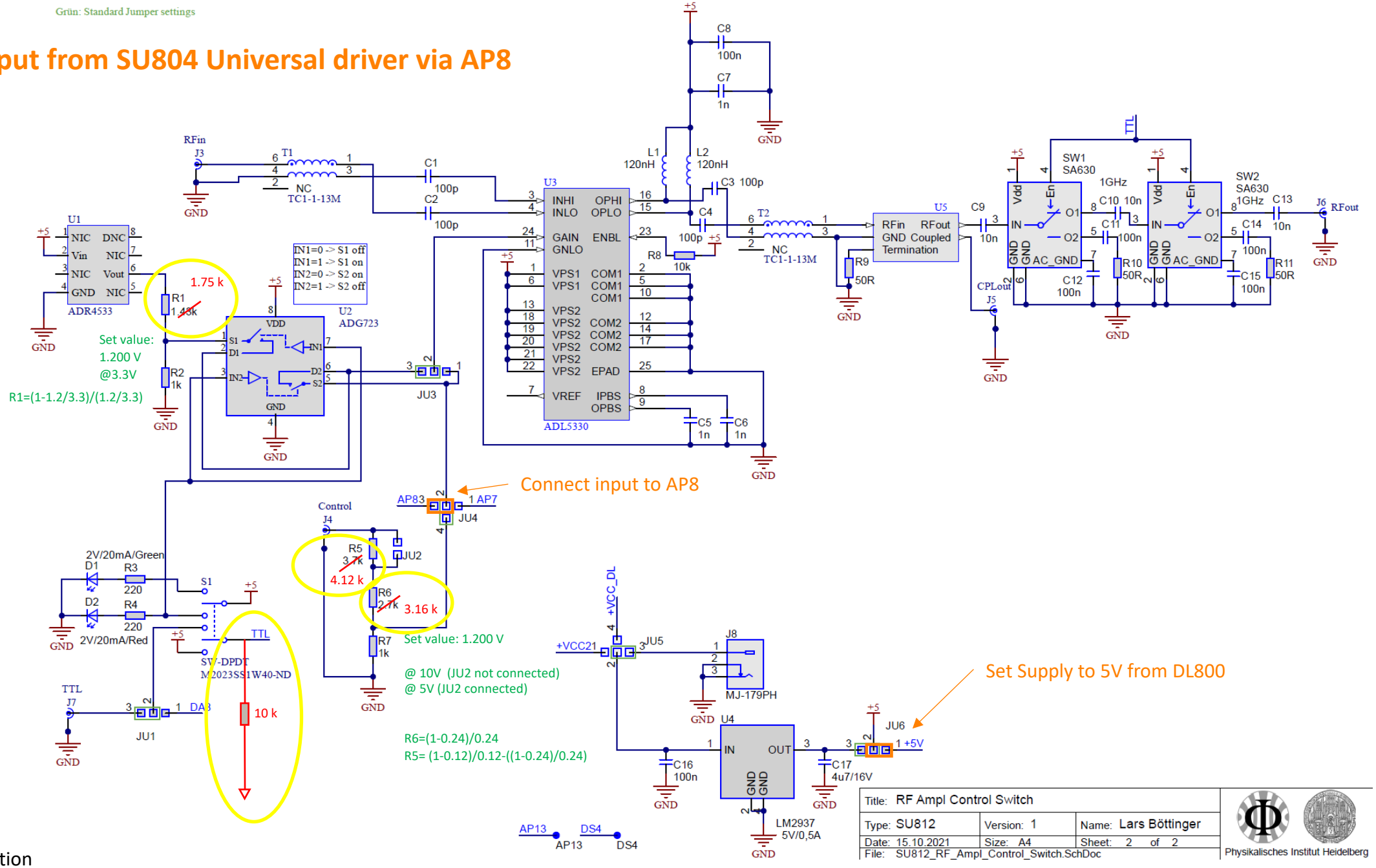

Documentation

[\\pi2\geraete\Geraete\SU\SU812_RF_Ampl_Control_Switch\Entwicklung\PCB\Project Outputs for SU812_RF_Ampl_Control_Switch](\\pi2\geraete\Geraete\SU\SU812_RF_Ampl_Control_Switch\Entwicklung\PCB\Project Outputs for SU812_RF_Ampl_Control_Switch)

VGA SU812:

Get control input from SU804

Universal driver via AP8

6

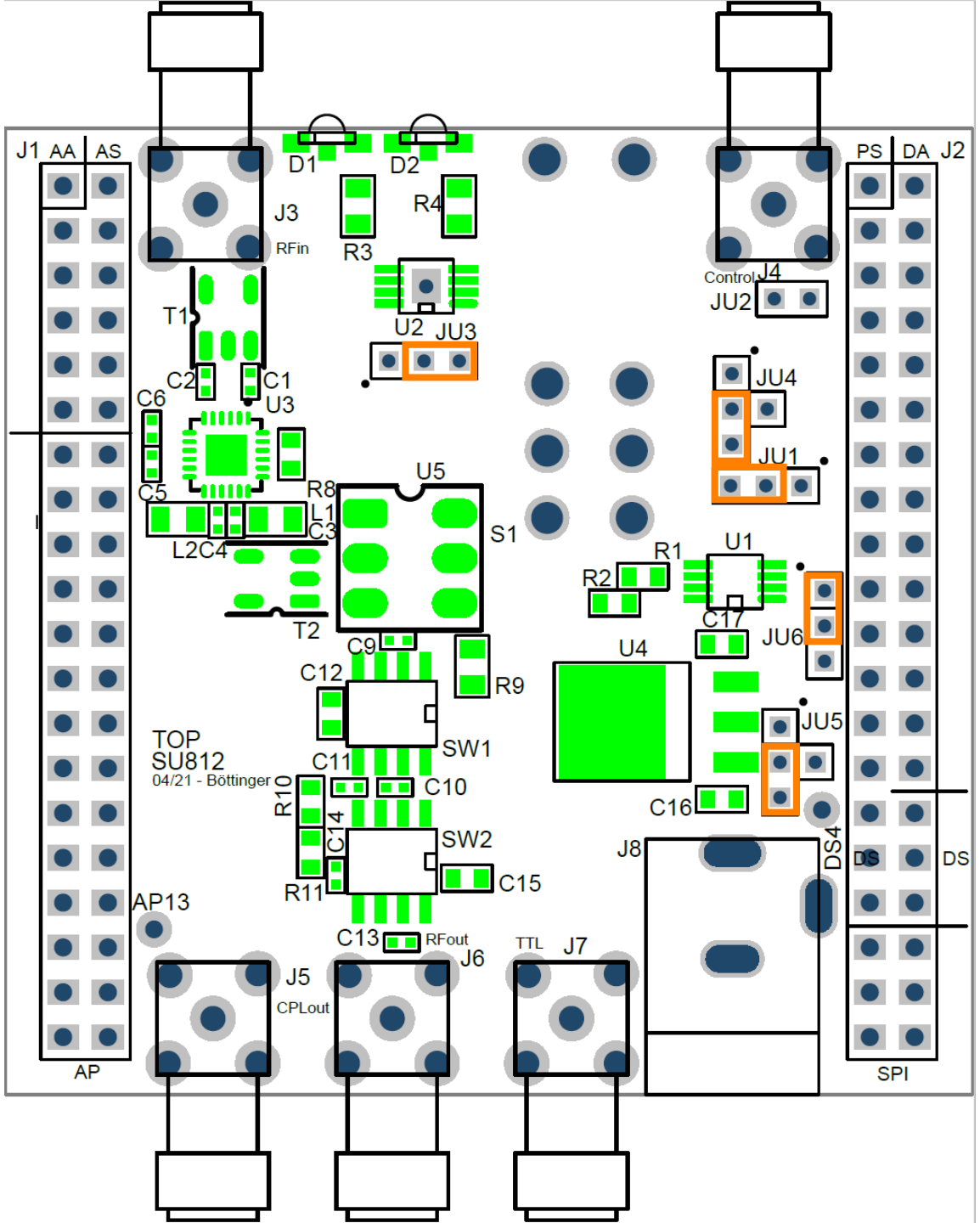

VGA SU812:

Get control input from SU804 Universal driver via AP7

6b

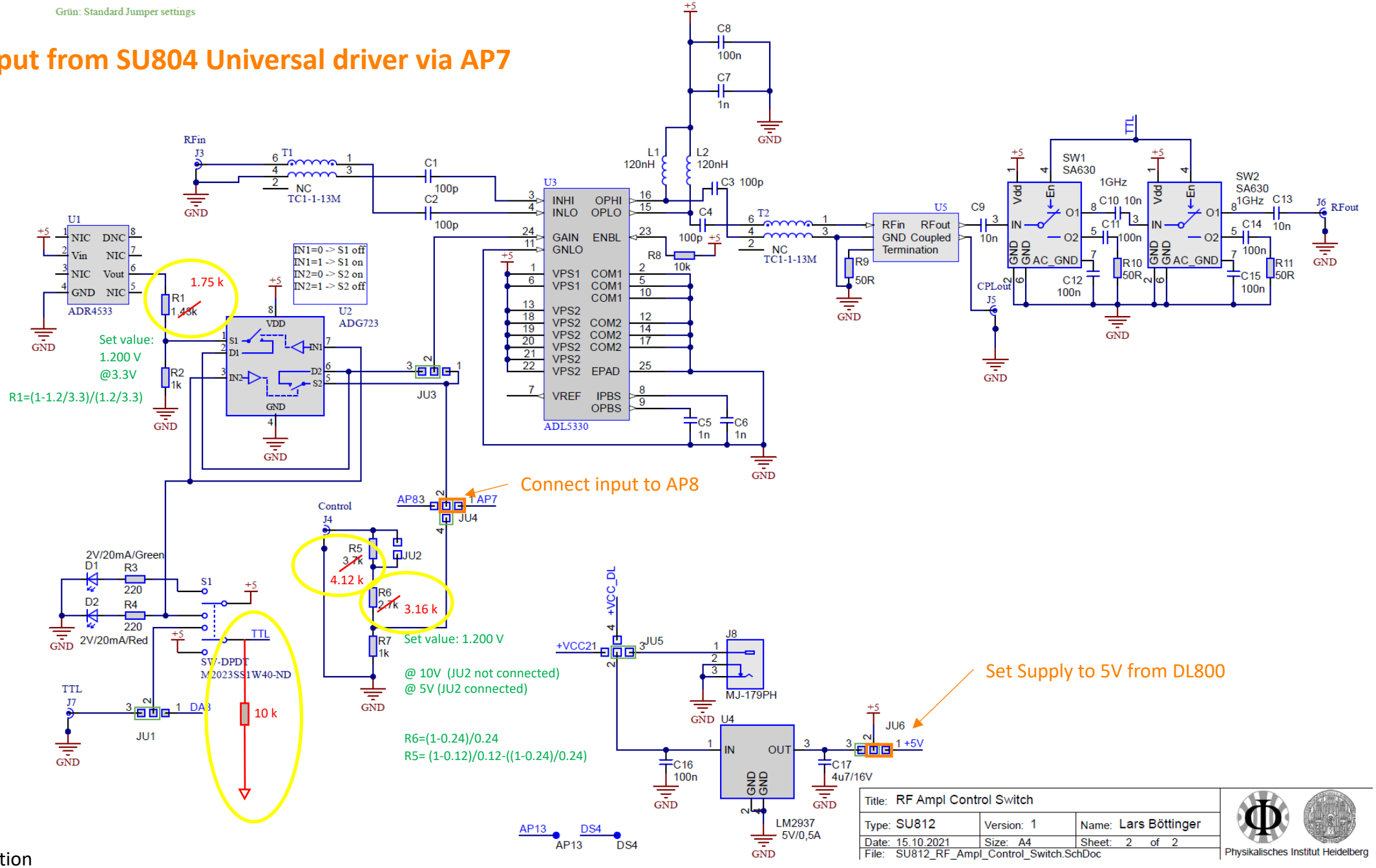

Documentation

[\\pi2\geraete\Geraete\SU\SU812_RF_Ampl_Control_Switch\Entwicklung\PCB\Project Outputs for SU812_RF_Ampl_Control_Switch](\\pi2\geraete\Geraete\SU\SU812_RF_Ampl_Control_Switch\Entwicklung\PCB\Project Outputs for SU812_RF_Ampl_Control_Switch)

VGA SU812:

Get control input from SU804

Universal driver via AP7

6b

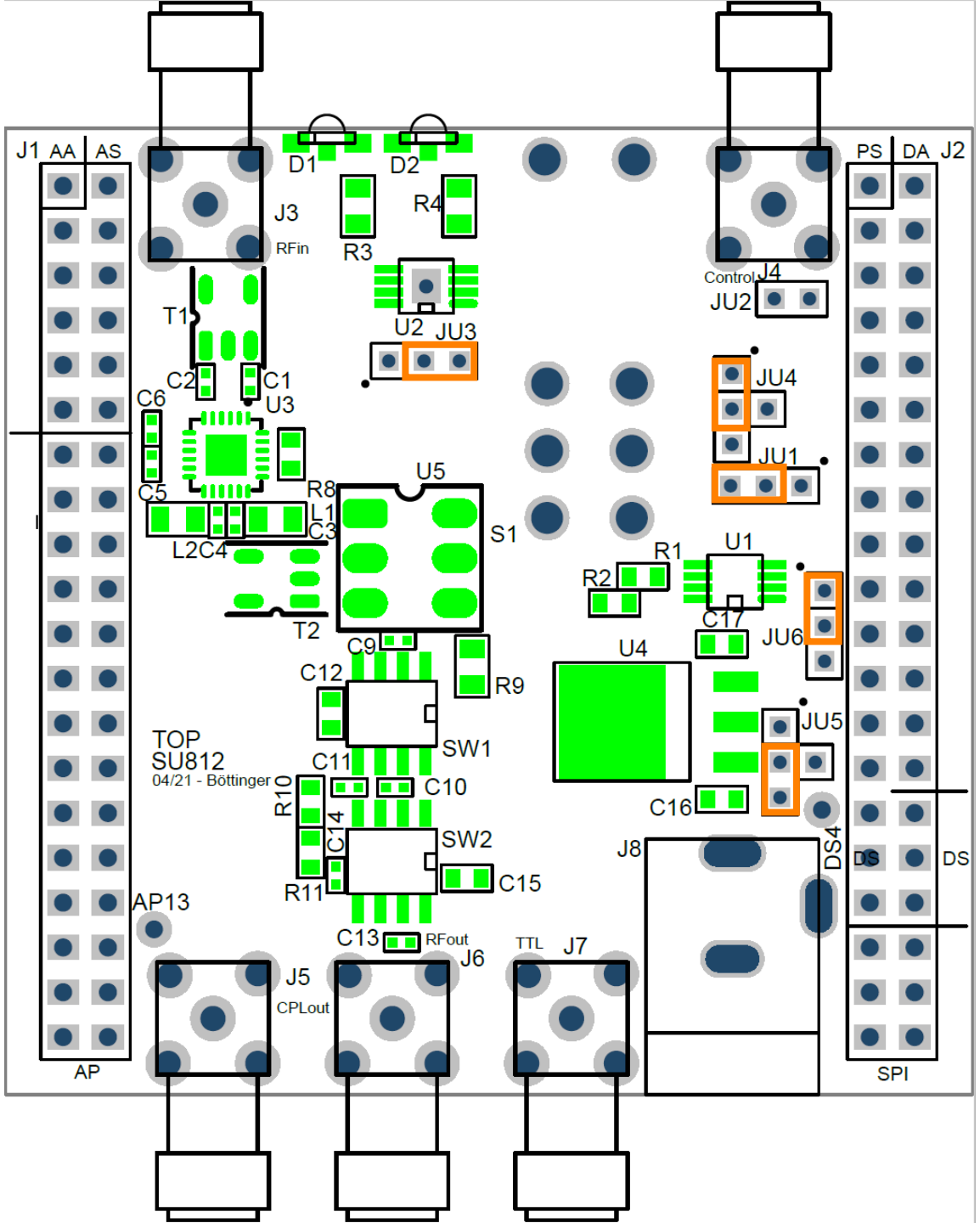

SU812 Measurement Protocol

Use Excel file for measurement protocol:

path: \pi2\Geräte\SU\SU812_RF_Ampl_Control_Switch\Measurement Protocol

Place copy here:

	Vpp [mV] @ 100 MHz		Supply current [mA] @ 7,6 V supply					**Gain(dB)**
serial number	input	output	external	Off	internal	Vrms in	Vrms out	**internal**
1	44,6	156,5	210	100	110	15,8	55,3	**10,9**
2	45,2	164,6	210	100	110	16,0	58,2	**11,2**
3	44,8	156,8	220	100	120	15,8	55,4	**10,9**
4	45,2	166,3	210	100	110	16,0	58,8	**11,3**
5	44,6	156	220	100	120	15,8	55,1	**10,9**
6	44,7	160,6	220	100	120	15,8	56,8	**11,1**
7	44,3	157,8	220	100	120	15,7	55,8	**11,0**
8	44,5	160,4	220	110	120	15,7	56,7	**11,1**
9	45	155,9	210	100	110	15,9	55,1	**10,8**
10	44,9	163	210	100	110	15,9	57,6	**11,2**

SU812 Notes production

- **Change resistor values of R1=1.74, R5=4.12 and R6=3.16k and add 10k Pulldown to TTL, take the right Linear Regulator.**
- https://www.mouser.de/c/passive-components/resistors/smd-resistors-chip-resistors/thick-film-resistors/?case%20code%20-%20mm=0603
- https://www.mouser.de/c/passive-components/resistors/smd-resistors-chip-resistors/thick-film-resistors/?case%20code%20-%20mm=0603&resistance=3.16%20kOhms
- https://www.mouser.de/c/passive-components/resistors/smd-resistors-chip-resistors/thick-film-resistors/?case%20code%20-%20mm=0603&resistance=4.12%20Ohms
- **Eventually use SMA connectors with short legs, that do not have to get cut (ask Gunnar, he used them for the SU807)**

- Check for the latest production version and check for additional notes on the workshop server

- Add Polarity Protection: Pin 39: Top: Block pin with solder. Bottom: Cut pin

- **Cut Pins of SMA connenctor on bottom side such that they don‘t touch the TO220 linear regulators of the DL800 Power supply board. If non-contacting can‘t be garantueed, put insulating tape ontop of the pins.**

- **Set standard jumper settings**

- Put PCBs into Aluminium case. Drawings of the cases can be found here:
  \\pi2\microcontroller\QD-Ultracold\Q-El - e-lego\Cases and Heatsink Needed: **Case BNC or other case** If another case is needed , put new drawing into the folder for the drawings

- **Perform test measurement** (see measurement protocol \pi2\Geräte\SU\SU812_RF_Ampl_Control_Switch\Measurement Protocol)

- **Label the finished boxes with the Part-number: SU807**
- **Label the connectors: RF-in Contr. ; CPL RF-out TTL**
- **Note down the gain in External config (led red)**

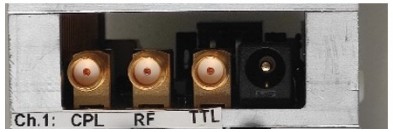

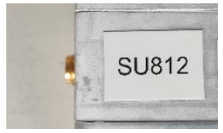

- Add some notes to the workshop server if there has been some modifications to the previous production version

- If not available yet, make pictures of the produced component and put them on the workshop server
- If not available yet, leave one module in the e-workshop Muster box and label it with „Muster E-Werkstatt“

VGA SU812: fixes

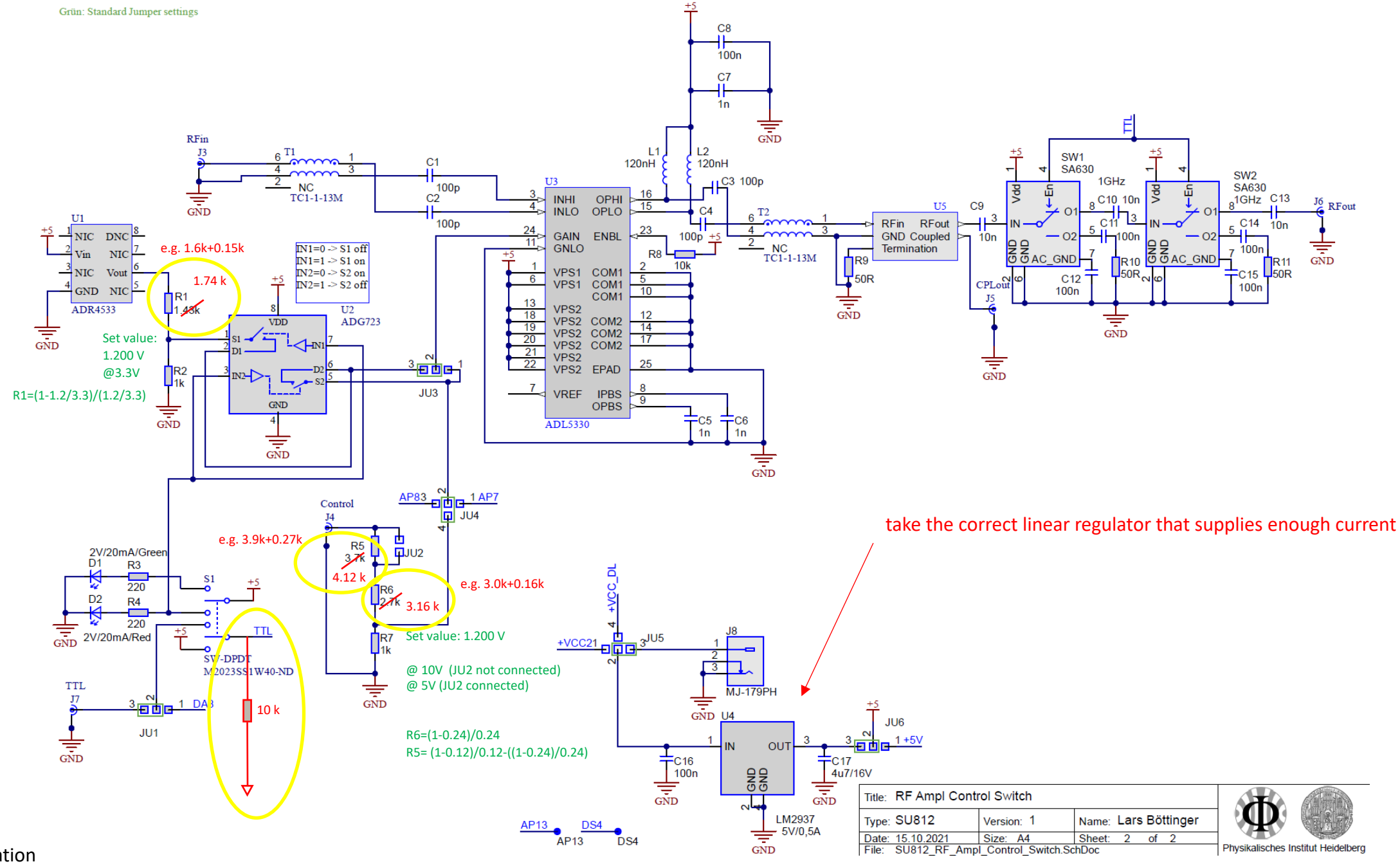

Documentation

[\\pi2\geraete\Geraete\SU\SU812_RF_Ampl_Control_Switch\Entwicklung\PCB\Project Outputs for SU812_RF_Ampl_Control_Switch](\\pi2\geraete\Geraete\SU\SU812_RF_Ampl_Control_Switch\Entwicklung\PCB\Project Outputs for SU812_RF_Ampl_Control_Switch)

Berechnung Widerstände SU812

$$\frac{R_7}{(R_5+R_6)+R_7} = \frac{1.2}{10}$$

$$R_7 = 0.12\left((R_5+R_6)+R_7\right)$$

$$R_7(1-0.12) = 0.12(R_5+R_6)$$

$$(R_5+R_6) = R_7\left(\frac{1-0.12}{0.12}\right) \quad \frac{U_g}{10V}, \frac{U_g}{10V}$$

$$R_6 = R_7\left(\frac{1-0.24}{0.24}\right) \quad \frac{U_g}{5V}, \frac{U_g}{5V}$$

$$R_7 \overset{!}{=} 1k$$

$$\rightarrow R_6 = 3.167\ k\Omega \qquad (R_5+R_6) = 7.333\ k\Omega$$

$$\rightarrow R_5 = 4.167\ k\Omega$$

$$\frac{R_2}{R_1+R_2} = \frac{1.2V}{3.3V} \quad \frac{U_g}{U_{ref}}$$

$$R_2 = \frac{1.2}{3.3}(R_1+R_2)$$

$$R_2\left(1-\frac{1.2}{3.3}\right) = \frac{1.2}{3.3}R_1$$

$$R_1 = \left(\frac{1-\frac{1.2}{3.3}}{\frac{1.2}{3.3}}\right)R_2$$

$$R_2 \overset{!}{=} 1k \qquad R_1 = 1.750\ k\Omega$$

Universal Driver SU804: Config: External / Internal with analog switch (AIN1→ OP1 → analog switch → OP2 → AO1)

V_Gain without 50 Ω termination ~ 1.7
If J23 removed: V Gain ~ 2.4

Output control logic – see logic table – switches from Internal to External Control

Power Select

Digital IN – switch control
Analog IN 2

2b

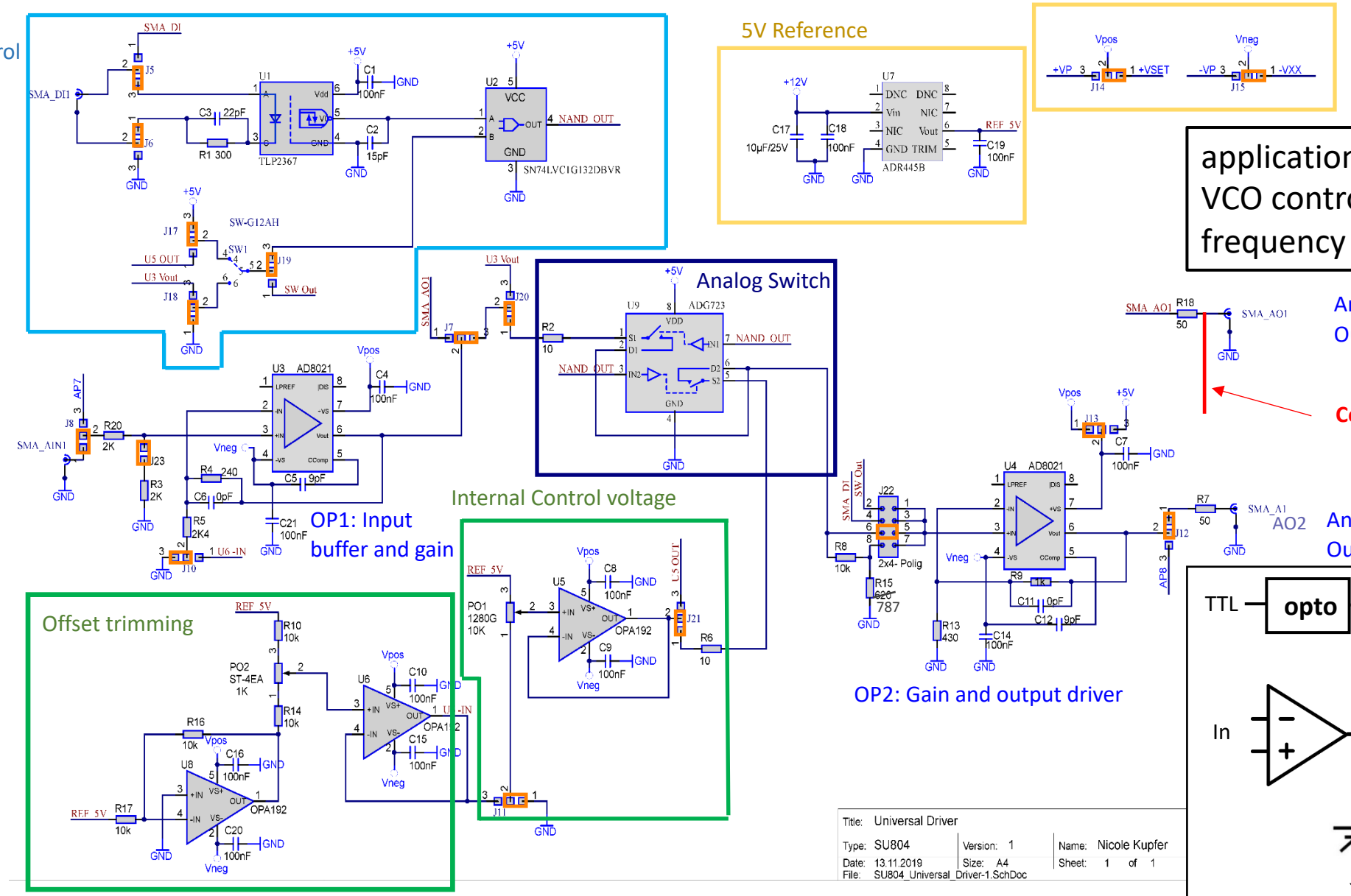

Set +Vset=19V on DL800 for up to 17V output

application:
VCO control to tune RF-frequency for AOMs

Analog Out 1
Output Control Voltage OP 1

Connect Aout2 to 12V

Analog IN 1
External Control
Voltage input

Analog Out 2
Output Control Voltage OP 2

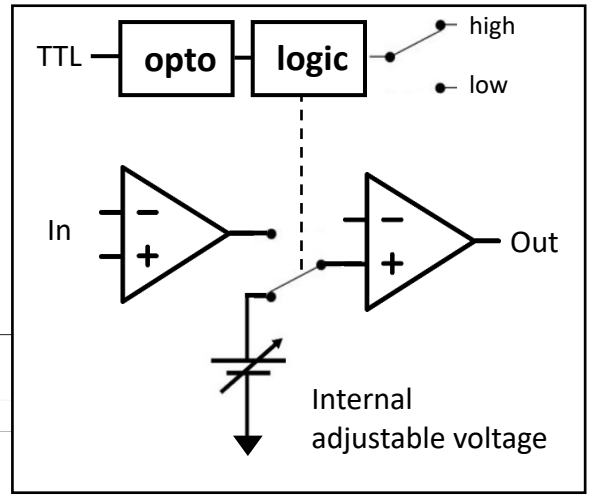

2b Jumper Settings

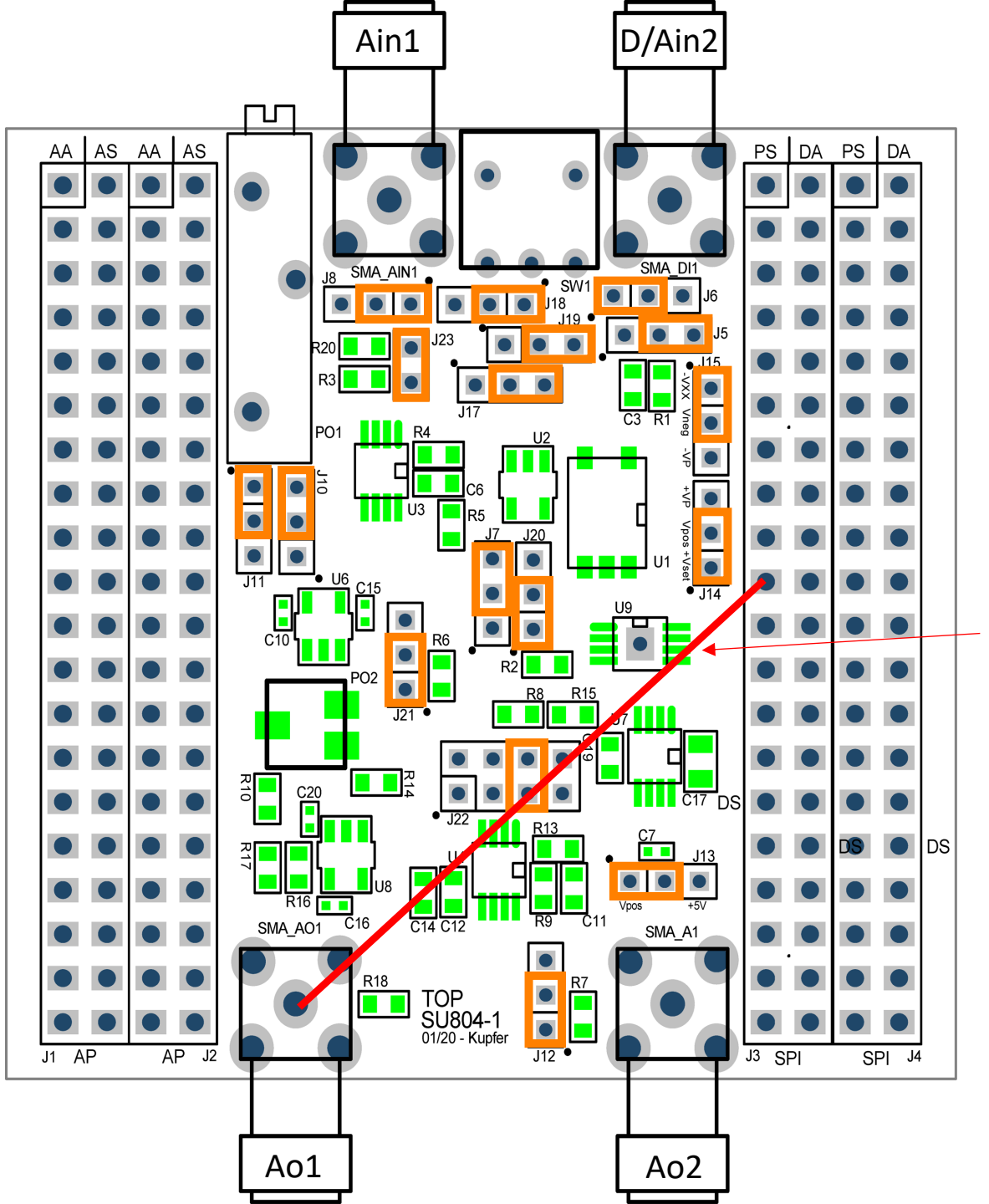

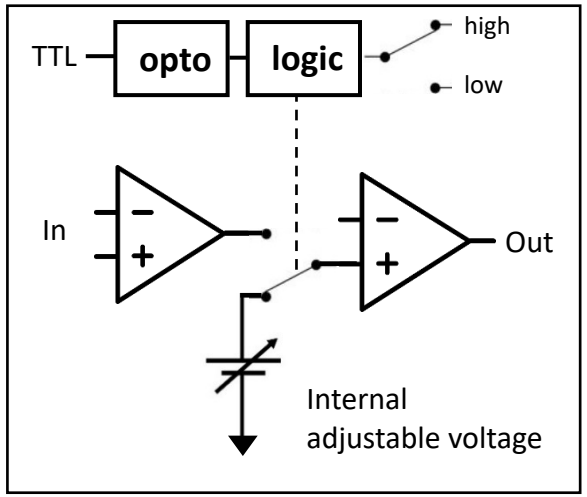

Universal Driver SU804: Config: External / Internal with analog switch (AIN1→ OP1 → analog switch → OP2 → AO1)

Output connected to AP8

V_Gain without 50 Ω termination ~ 1.7
If J23 removed: V Gain ~ 2.4

Output control logic – see logic table – switches from Internal to External Control

Power Select

Digital IN – switch control
Analog IN 2

3b

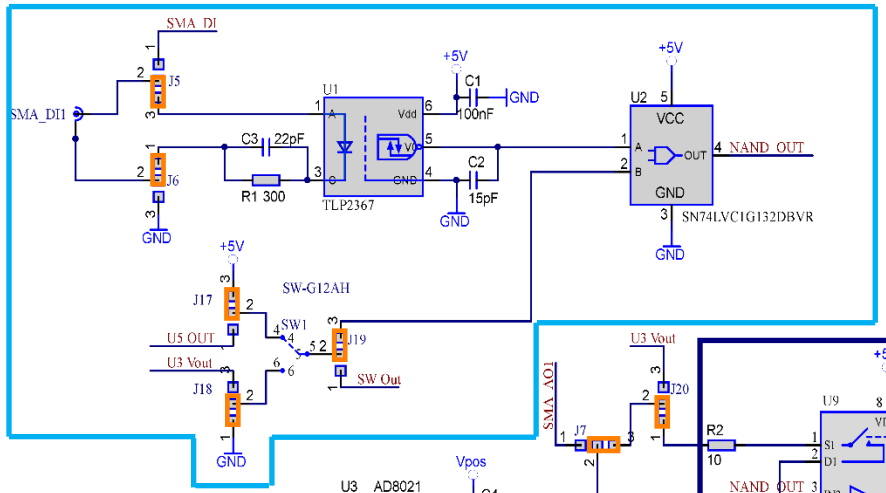

5V Reference

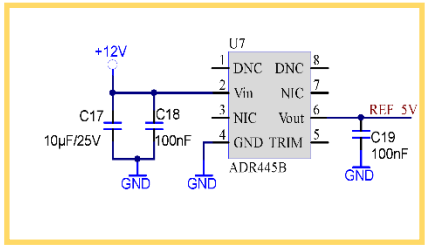

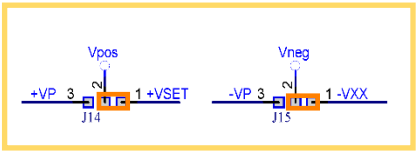

Set +Vset=19V on DL800 for up to 17V output

application:
VCO control to tune RF-frequency for AOMs

Analog Switch

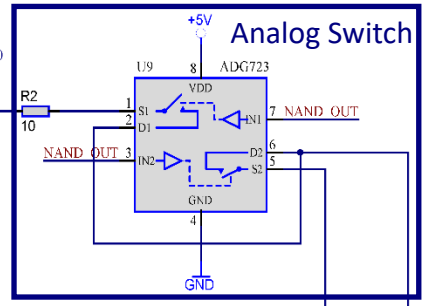

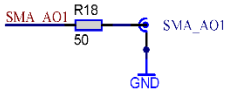

Analog Out 1
Output Control Voltage OP 1

Analog IN 1
External Control
Voltage input

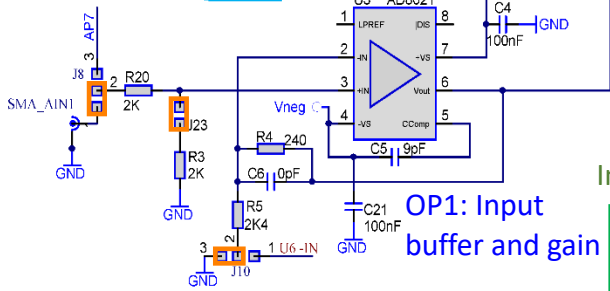

OP1: Input buffer and gain

Internal Control voltage

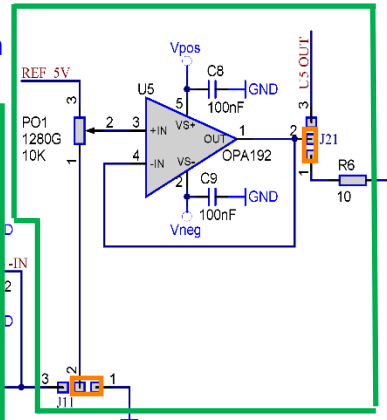

Offset trimming

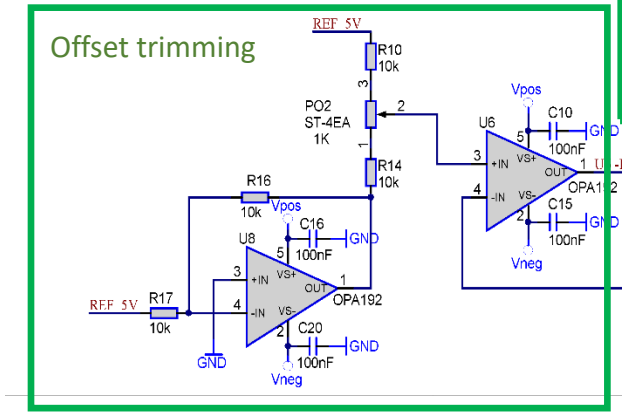

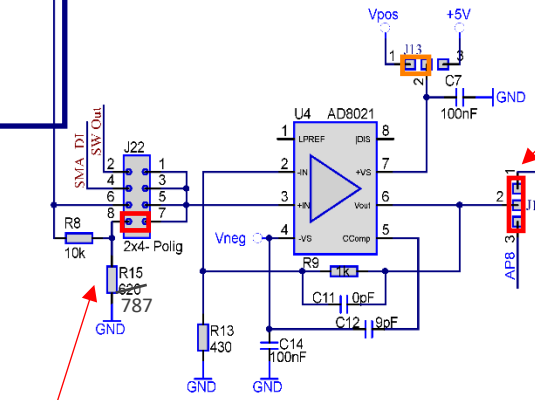

Connect J12 with 3-pin Jumper

Analog Out 2
Output Control Voltage OP 2

OP2: Gain and output driver

with 620 Ω → Aout2 = 0.959V
with 780 Ω → Aout2 = 1.184 V
with 800 Ω → Aout2 = 1.219 V
calculated 787 Ω ← Aout2 = 1.20 V

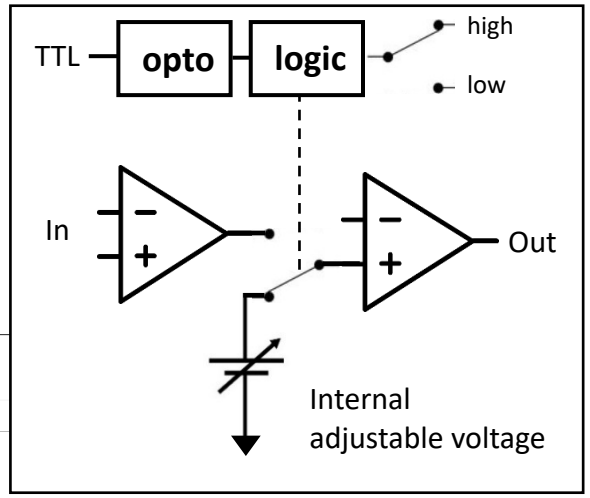

Title: Universal Driver			
Type: SU804	Version: 1	Name: Nicole Kupfer	
Date: 13.11.2019	Size: A4	Sheet: 1 of 1	
File: SU804_Universal_Driver-1.SchDoc			

3b Jumper Settings

Output connected to AP8

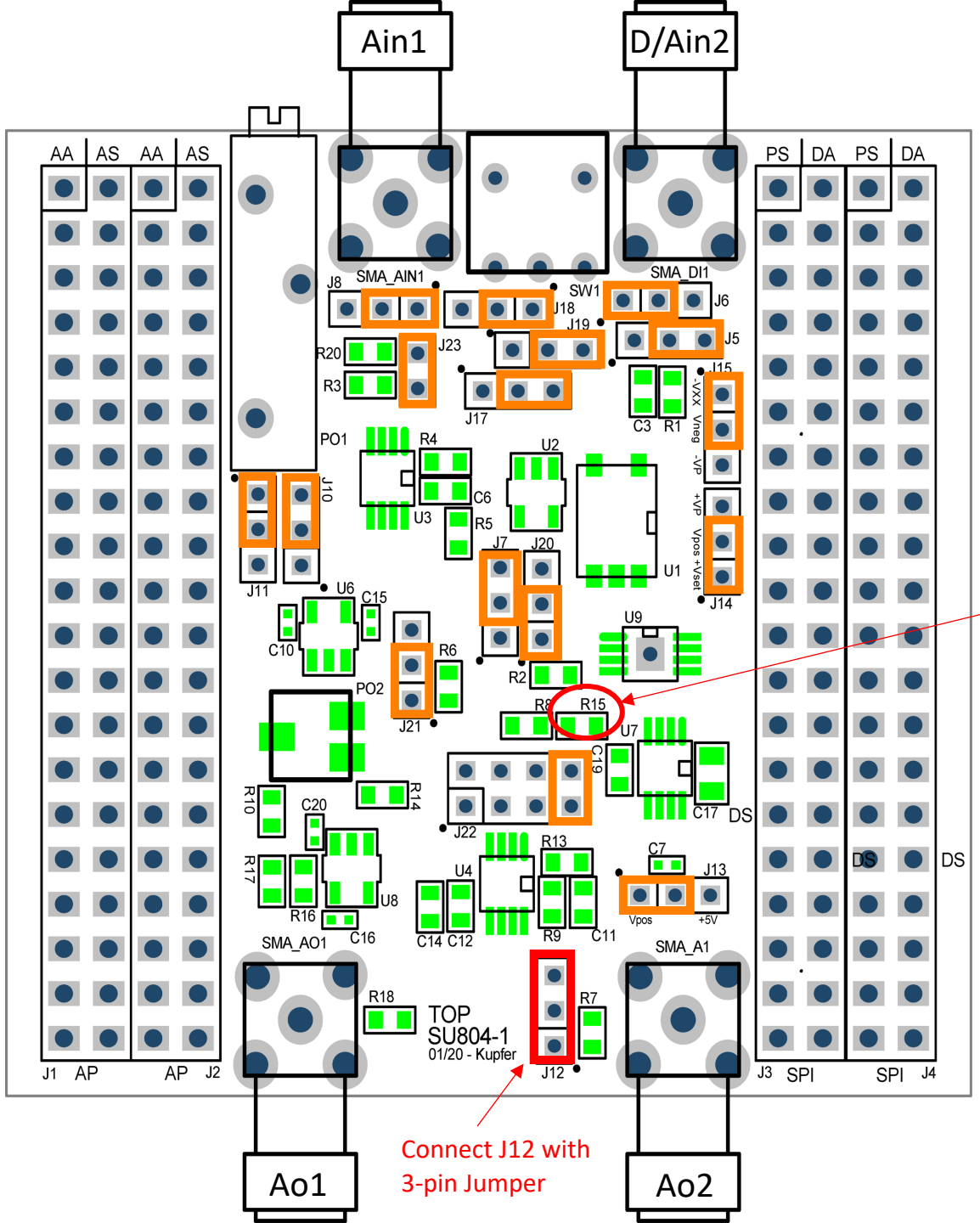

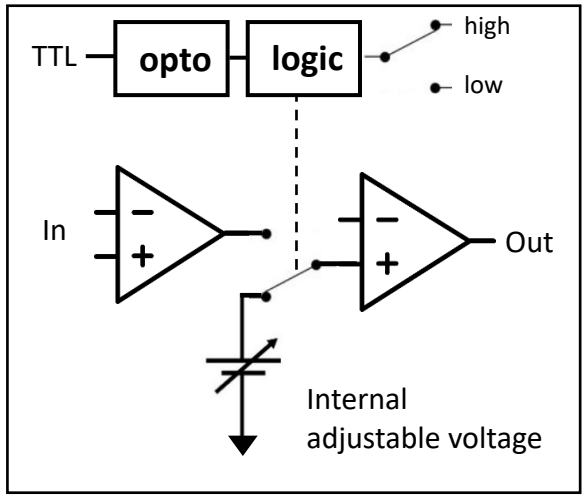

Universal Driver SU804: Config: External / Internal with analog switch (AIN1→ OP1 → analog switch → OP2 → AO1)

Output connected to AP8

V_Gain without 50 Ω termination ~ 1.7
If J23 removed: V Gain ~ 2.4

Output control logic – see logic table – switches from Internal to External Control

Power Select

Set +Vset=19V on DL800 for up to 17V output

Digital IN – switch control
Analog IN 2

3c

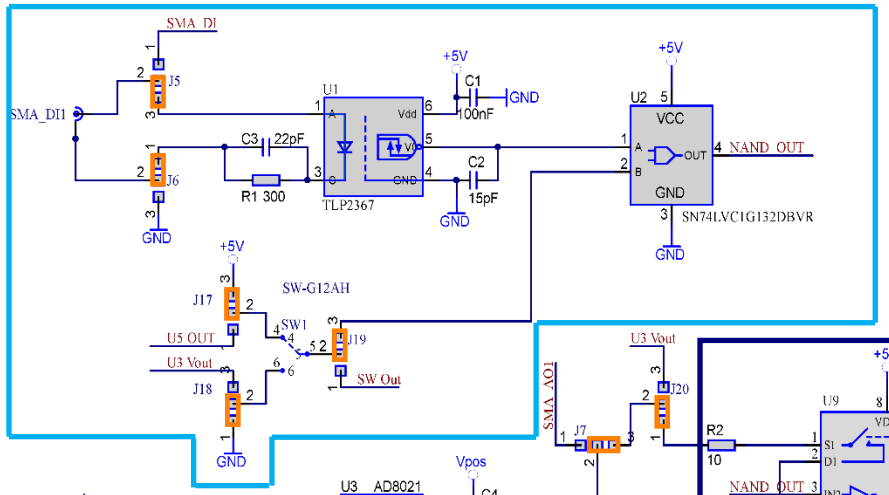

5V Reference

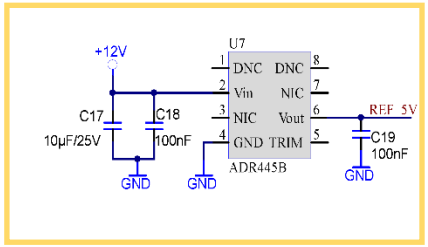

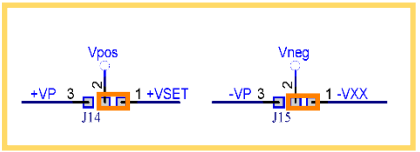

application:
VCO control to tune RF-frequency for AOMs

Analog Switch

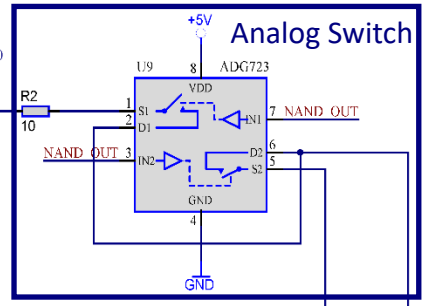

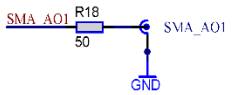

Analog Out 1
Output Control Voltage OP 1

Analog IN 1
External Control
Voltage input

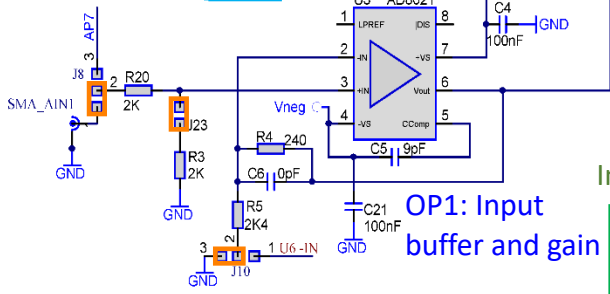

OP1: Input buffer and gain

Internal Control voltage

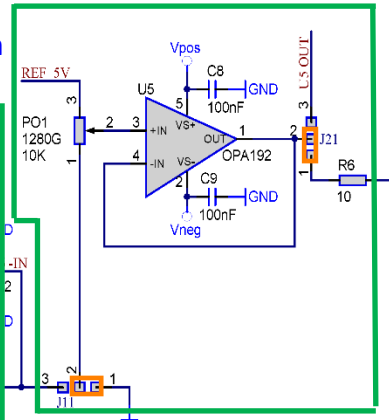

Offset trimming

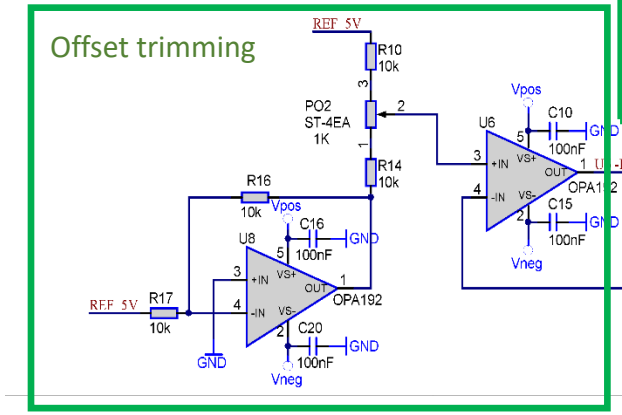

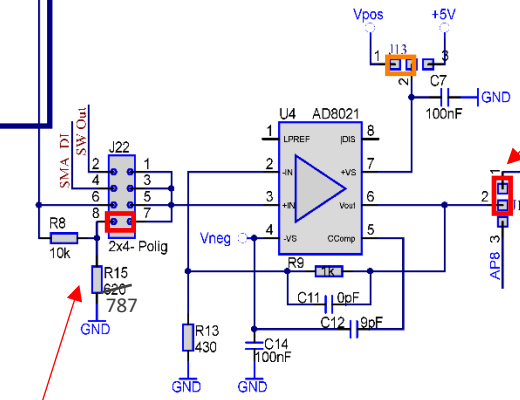

Connect J12 Pin 1-2 and to AP7

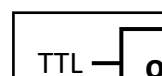

Analog Out 2
Output Control Voltage OP 2

OP2: Gain and output driver

with 620 Ω → Aout2 = 0.959V
with 780 Ω → Aout2 = 1.184 V
with 800 Ω → Aout2 = 1.219 V
calculated 788 Ω ← Aout2 = 1.200 V

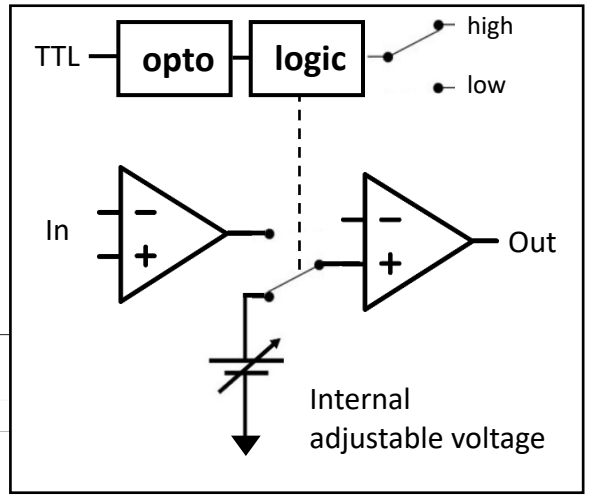

Title: Universal Driver			
Type: SU804	Version: 1	Name: Nicole Kupfer	
Date: 13.11.2019	Size: A4	Sheet: 1 of 1	
File: SU804_Universal_Driver-1.SchDoc			

3c Jumper Settings

Output connected to AP7

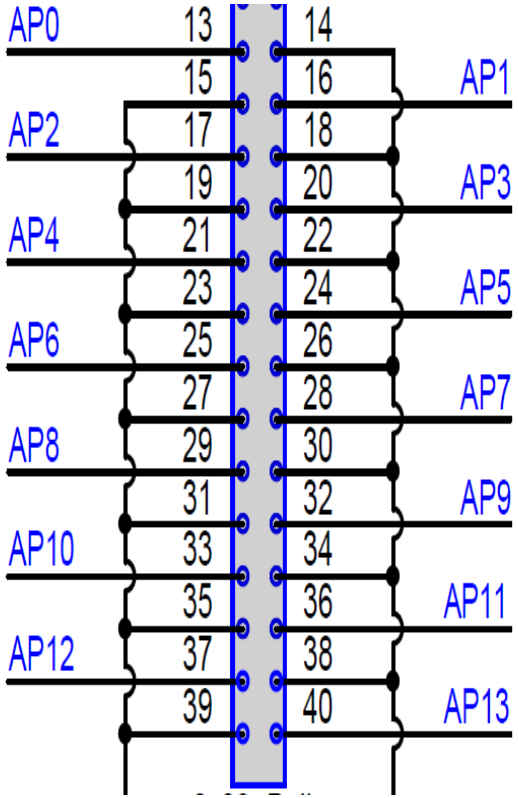

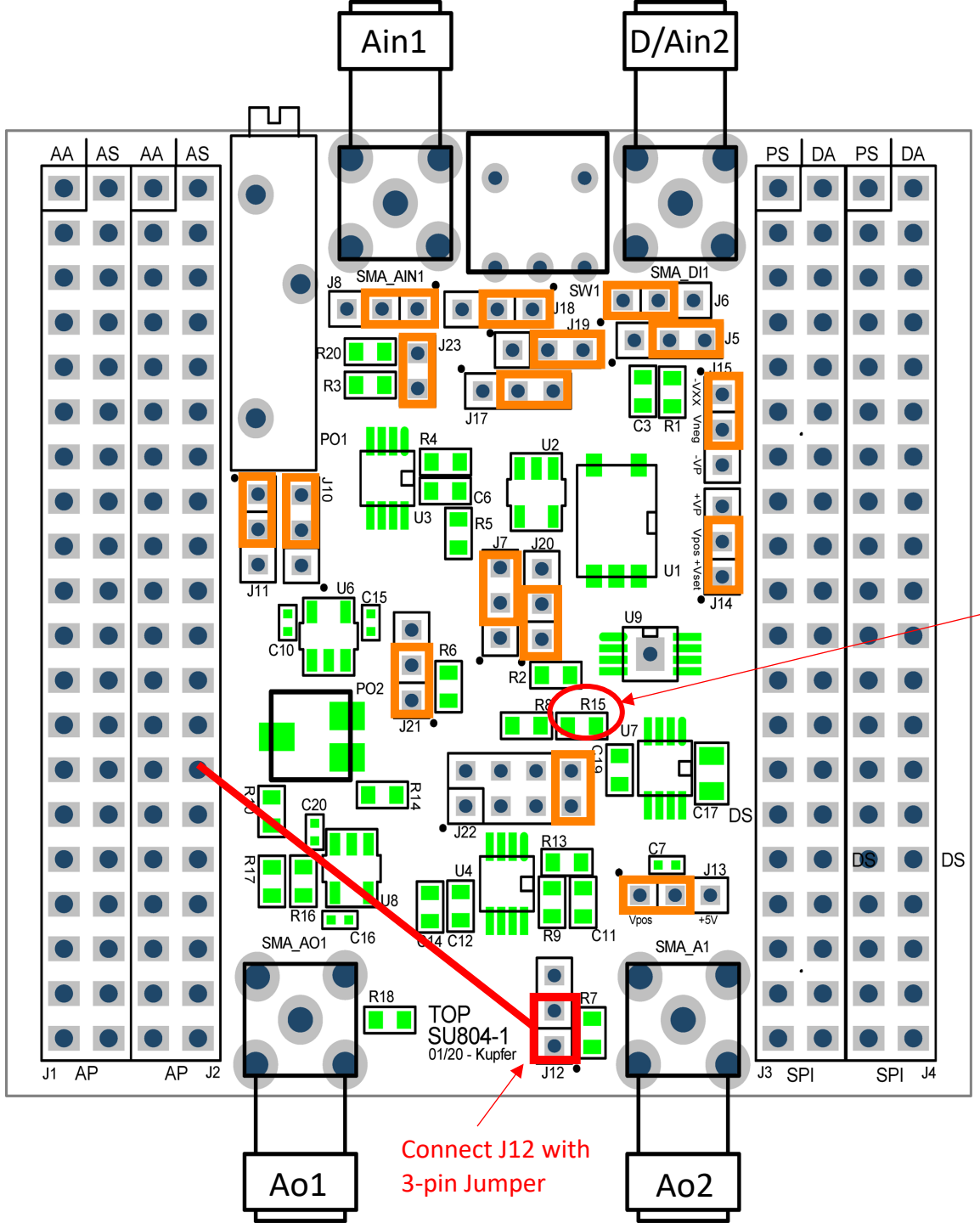

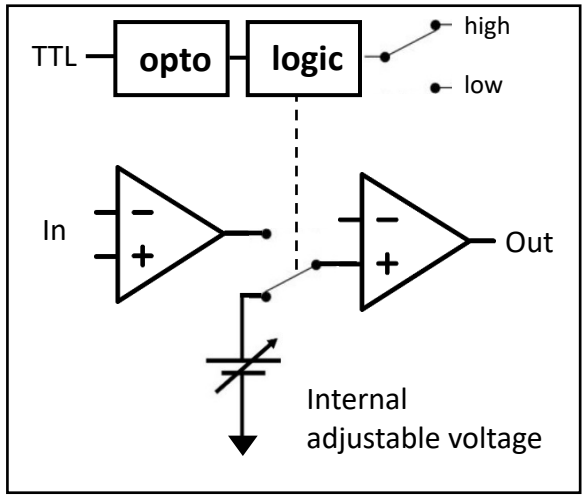

e-lego module

Universal Driver – SU804

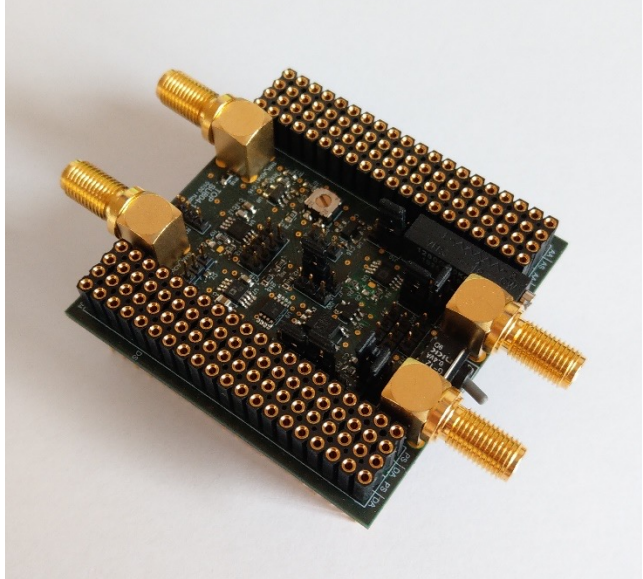

Board with 2 Non-Inverting OPs and Internal control voltage. Can be used as AOM driver to control rf Amplitude (Mixer) and Frequency (VCO). Option for TTL controlled switching between external and internal Voltage source

Recommended supplies: pos: 24V, neg: 7.5V on DL800 (light). Set Positive overvoltage protection to 26V on DL800

Recommended Rail Voltages: -Vxx=-2.7V, Vset=+19V. To be set on the DL800 (light) (Jumper '1.4'+6.4+6.4+3.2+1.6 [V] for Vset) and selected on SU804.

Input Voltage: 0, +10V with Analog switch, with manual switch: limits set by rails

Output Voltage: limits set by rails. Maximum Output Voltage with 50 Ω termination: 3.75 V (corresponds to 75mA)

BW: 90° Phase shift: 20 MHz
- 3dB Gain: 35 MHz

PSD: -140 dBm/Hz (single OP), -137 dBm/Hz (OP1+2 with Manual Sw.) , -140 dBm/Hz (OP1+2 with Analog Sw.)

Options:

2 Buffers

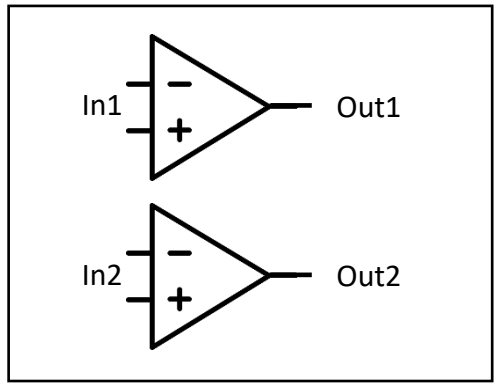

Application: e.g. Amplifier stage and 50 Ω driver for Redpitaya DACs

Voltage Control Ext./Internal with manual switch

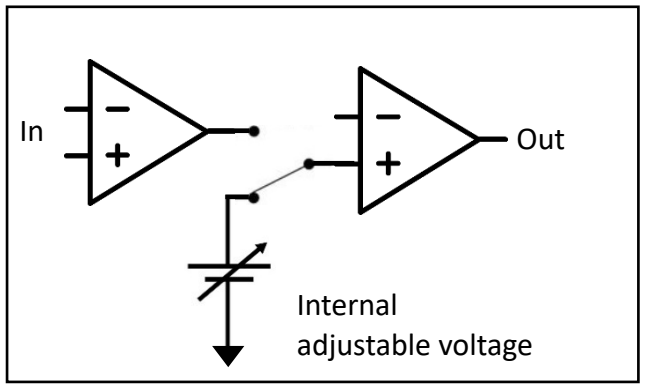

Application: e.g. Amplitude and Frequency control for AOM driver

Voltage Control with TTL controlled switch

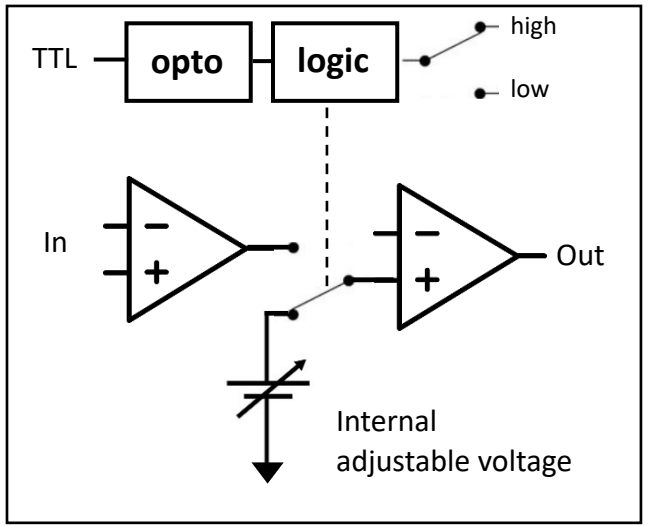

SU804 – OP Chip

AD8021

Overview

Features and Benefits | Product Details

- Low noise
  2.1 nV/√Hz input voltage noise
  2.1 pA/√Hz input current noise
- Custom compensation
  Constant bandwidth from G = -1 to G = -10
- High speed
  200 MHz (G = -1)
  190 MHz (G = -10)
- Low power
  34 mW or 6.7 mA typ for 5 V supply
  34 mW or 6.7 mA typ for 5 V supply
- Low distortion
  -93 dBc second harmonic, fc = 1 MHz
  -108 dBc third harmonic, fc = 1 MHz
- DC precision
  1 mV max input offset voltage
  0.5 μV/°C input offset voltage drift
- Wide supply range, 5 V to 24 V
- Low price
- Small packaging Available in SOIC-8 and MSOP-8

ABSOLUTE MAXIMUM RATINGS

Table 4.

Parameter	Rating
Supply Voltage	26.4 V
Power Dissipation	Observed power derating curves
Input Voltage (Common Mode)	$\pm V_S \pm 1$ V
Differential Input Voltage[1]	±0.8 V
Differential Input Current	±10 mA
Output Short-Circuit Duration	Observed power derating curves
Storage Temperature Range	−65°C to +125°C
Operating Temperature Range	−40°C to +85°C
Lead Temperature (Soldering, 10 sec)	300°C

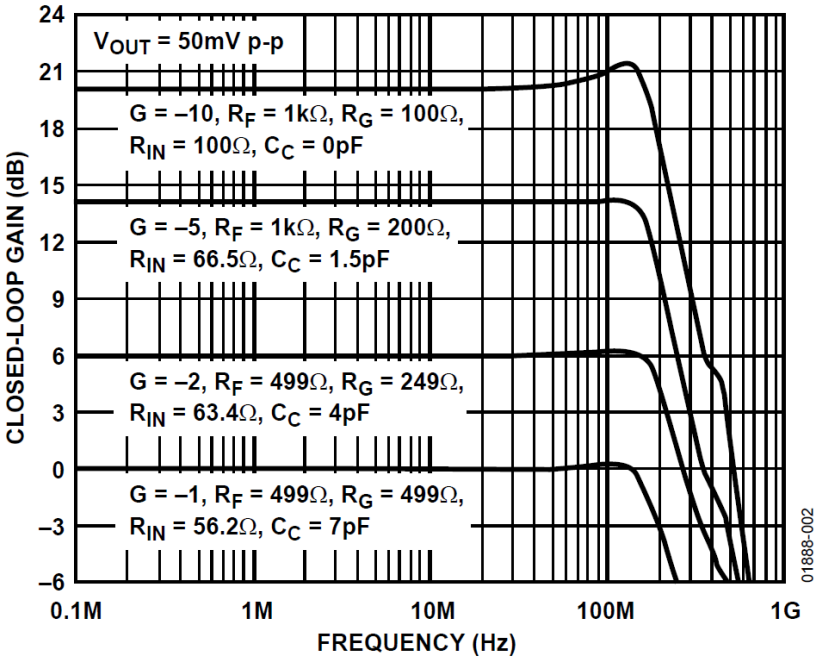

Figure 2. Small Signal Frequency Response

Universal Driver SU804

Jumper Settings

Output control logic – see logic table – switches from Internal to External Control

Digital IN – switch control
Analog IN 2

Analog IN 1
External Control
Voltage input

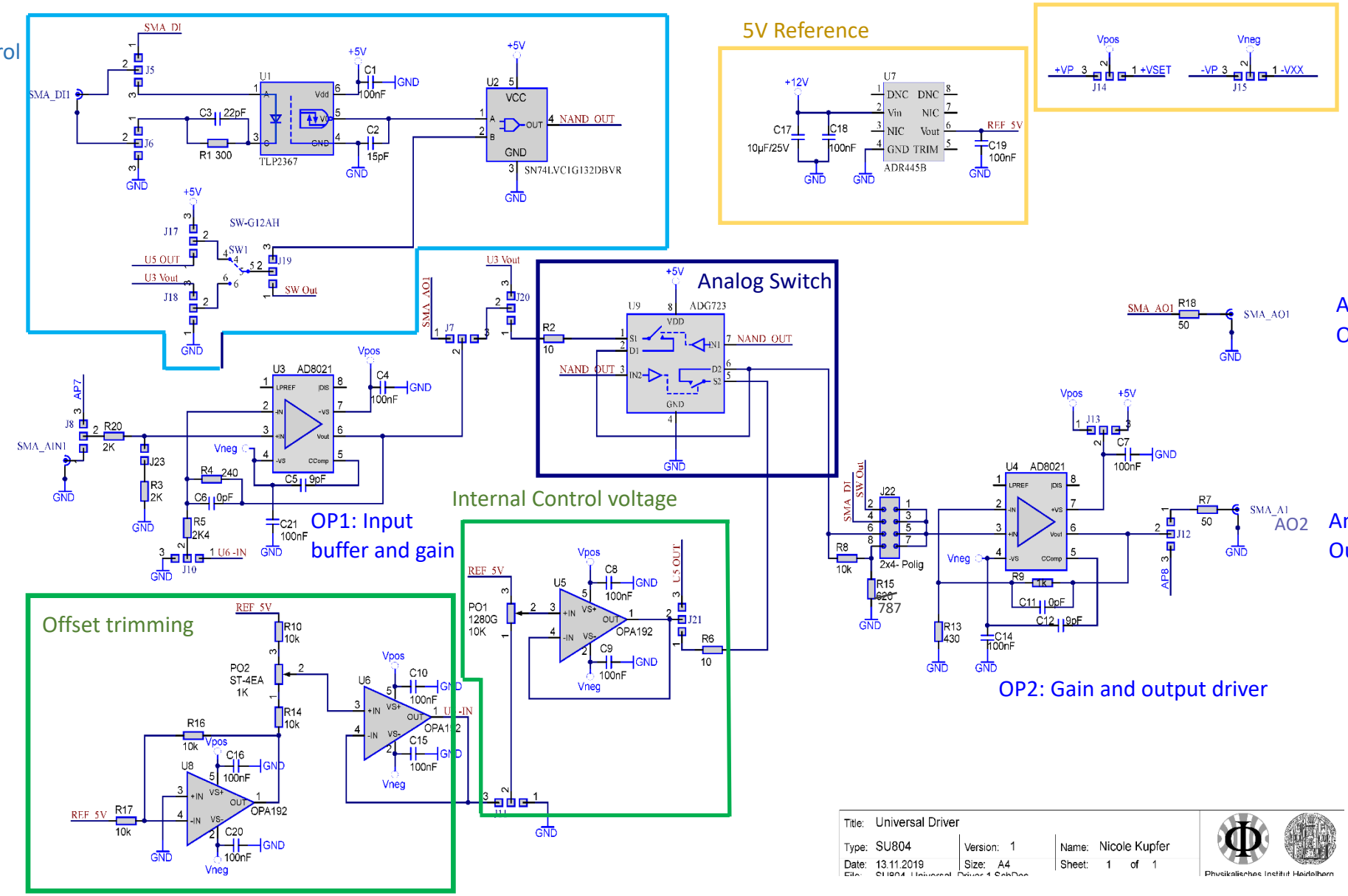

Universal Driver SU804: Config: Single OP (AIN1→ OP1 → AO1)

Voltage Gain without 50 Ω termination ~ 0.5

Jumper Settings

Output control logic – see logic table – switches from Internal to External Control

Digital IN – switch control
Analog IN 2

Analog IN 1
External Control
Voltage input

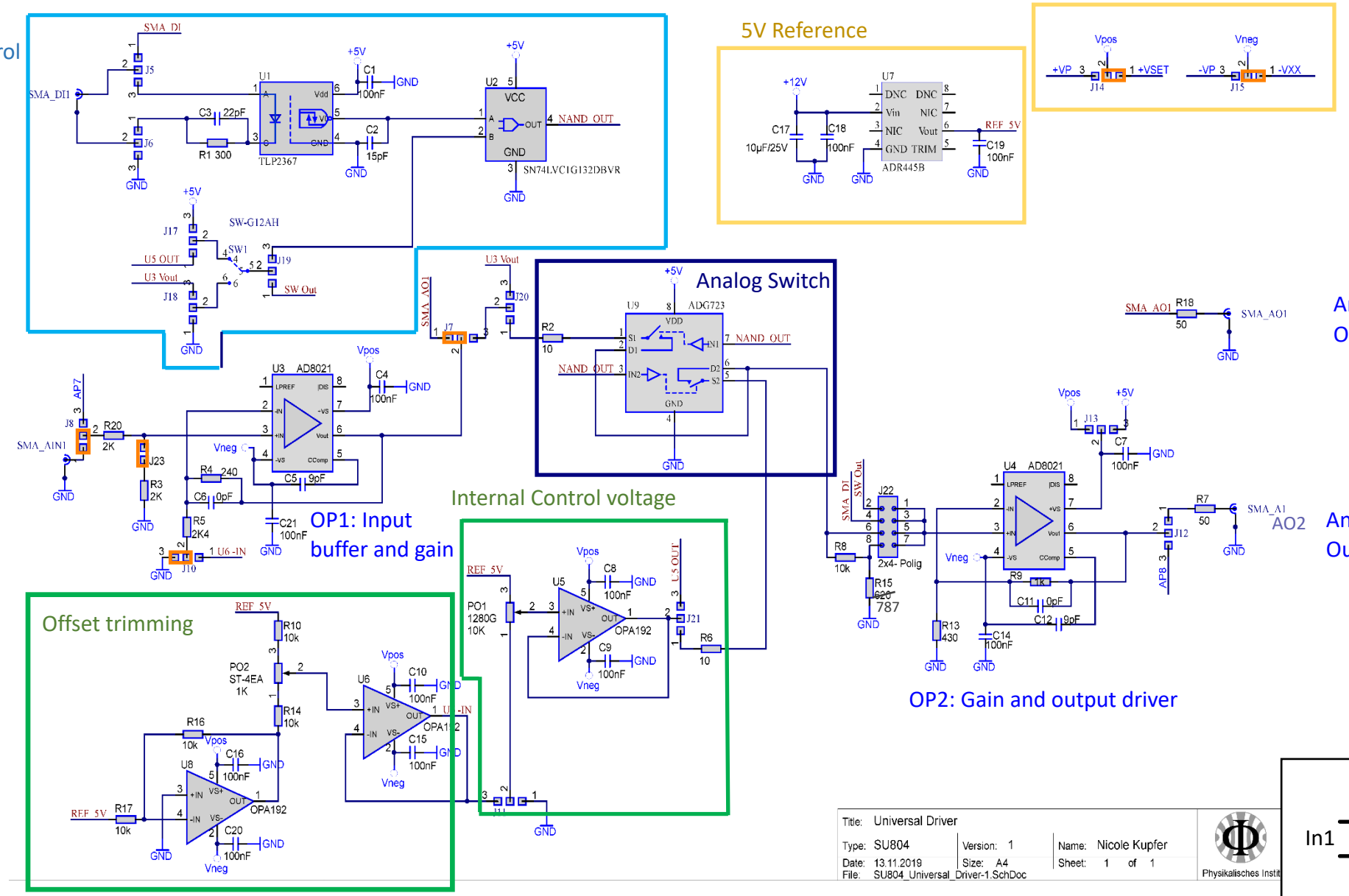

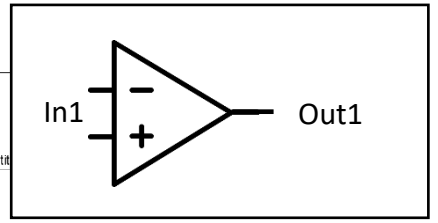

Jumper Settings

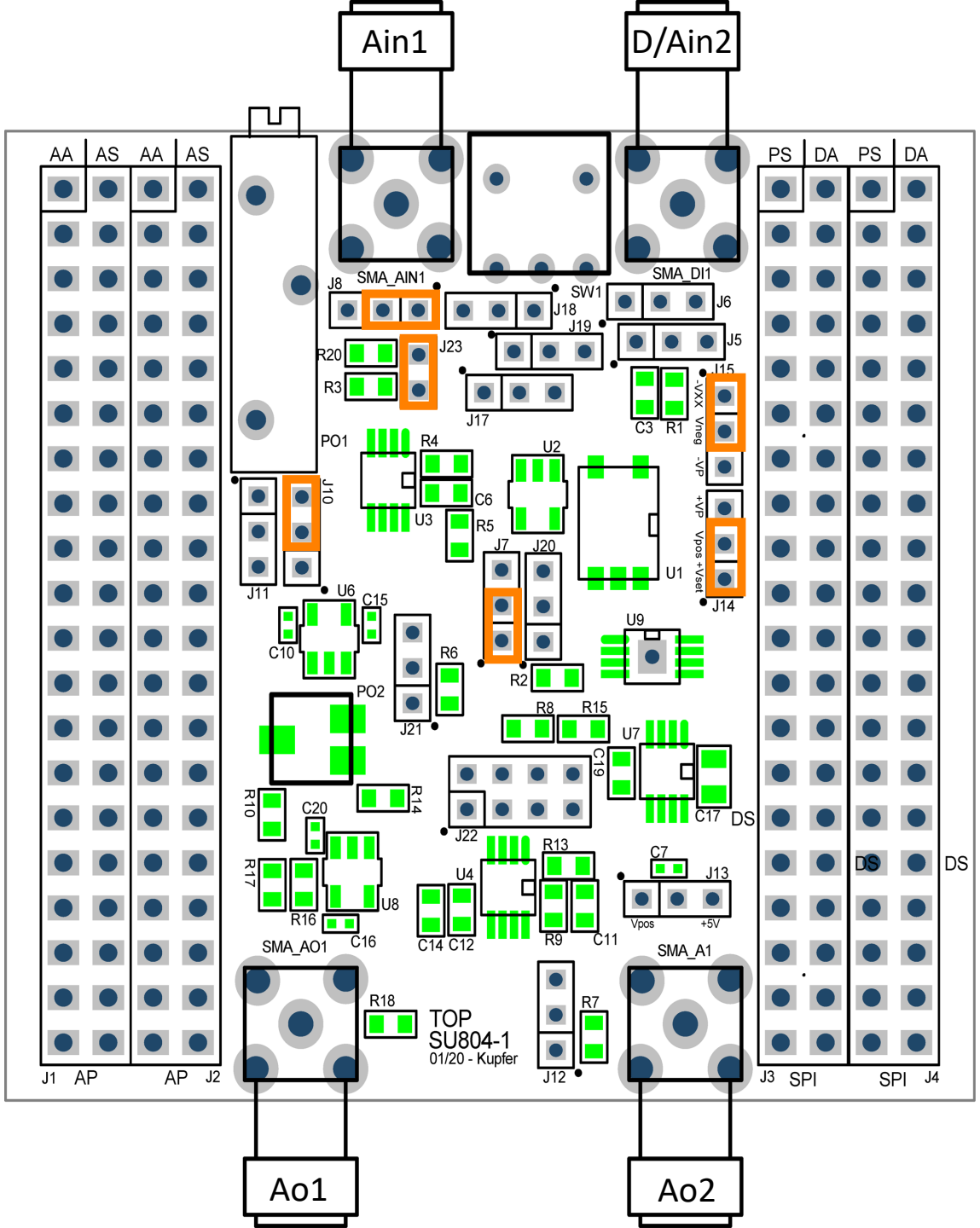

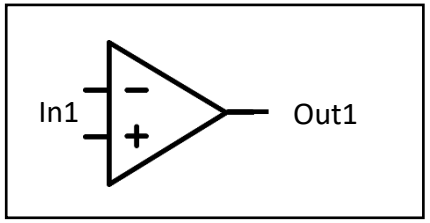

Vpos: + Vset=19V (J14 set to 2-3)
Vneg: -Vxx=-2.7V (J14 set to 2-3)
Power Spectral density: Setting: Analog In SMA_AIN1 set to GND with 50 Ohm. Analog output (SMA_AO1) terminated with 50 Ohm.

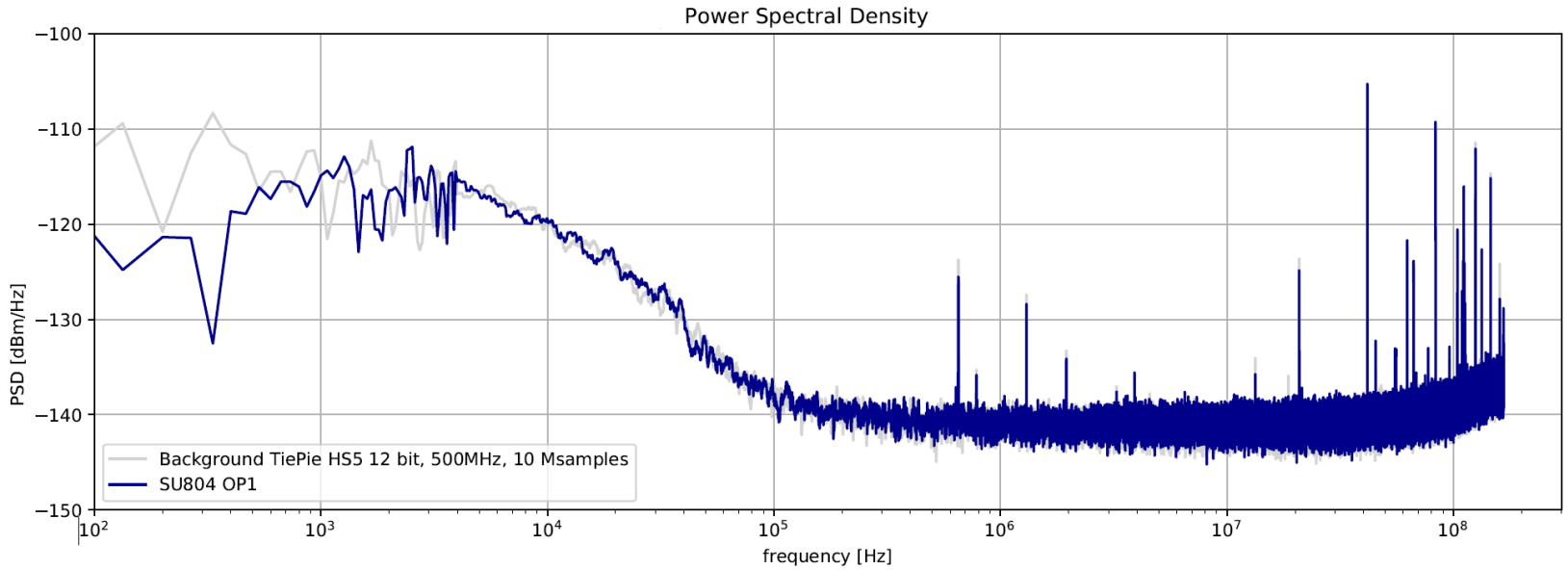

•Bode Plot: Transfer Function of Amplitude and Phase as function of modulation frequency, Setting: Analog In SMA_AIN1 set to 0.1V*cos(2*pi*f*t) . Analog output (SMA_AO1) terminated with 50 Ohm

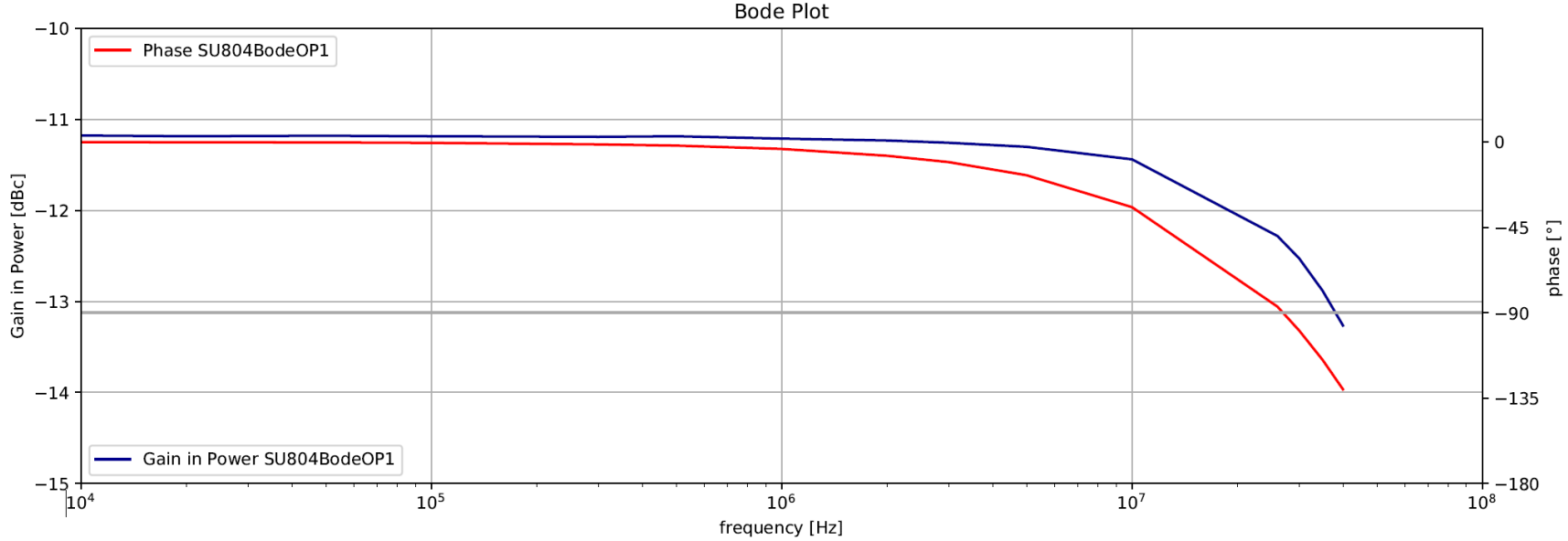

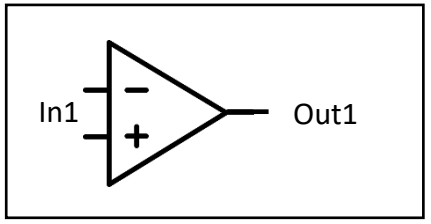

Universal Driver SU804: Config: Two Single OPs (AIN1→ OP1 → AO1 and AIN2→ OP2 → AO2)

Voltage Gain without 50 Ω termination ~ 0.5

Jumper Settings

Output control logic – see logic table – switches from Internal to External Control

Power Select

Digital IN – switch control
Analog IN 2

5V Reference

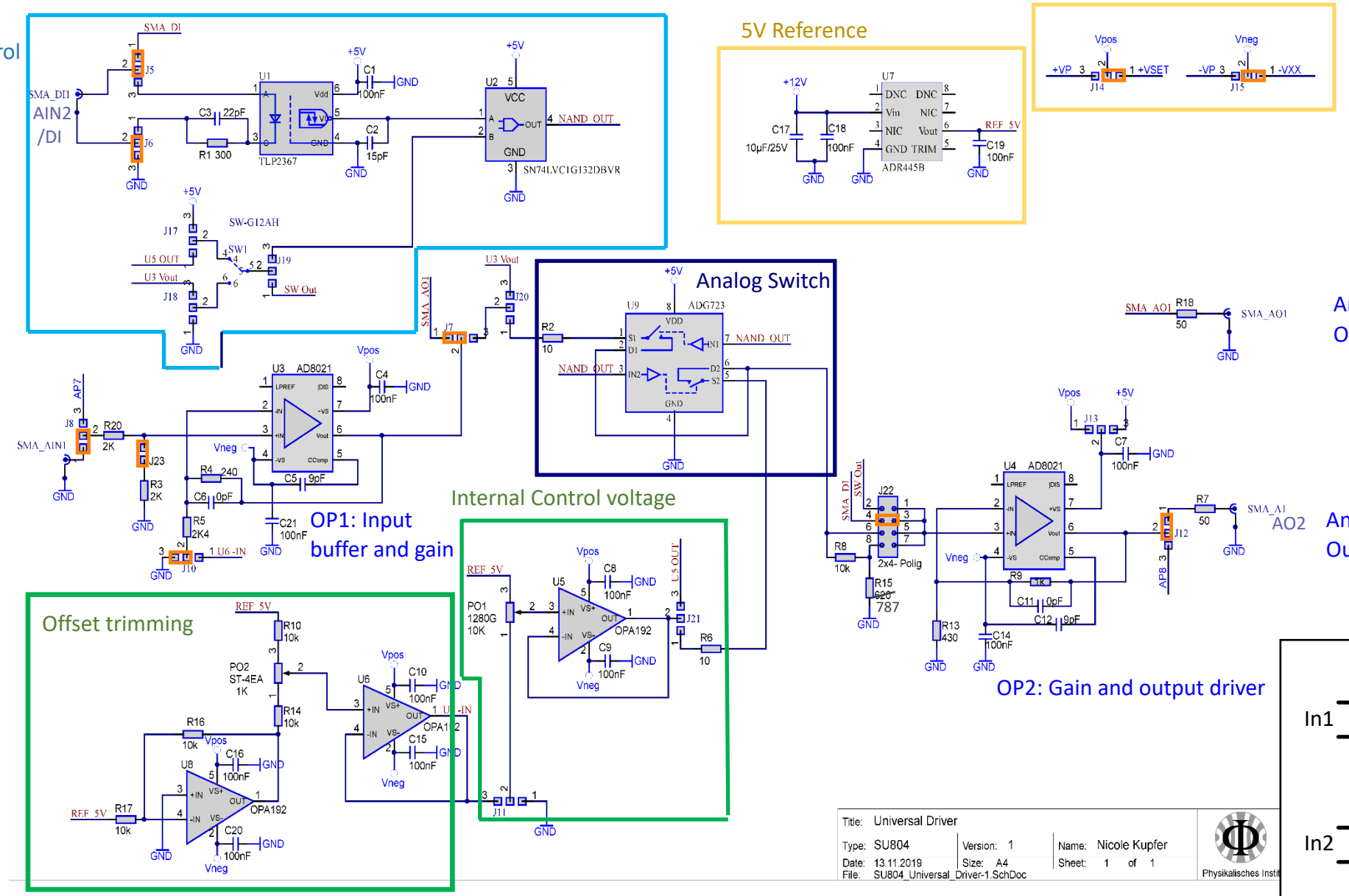

Jumper Settings

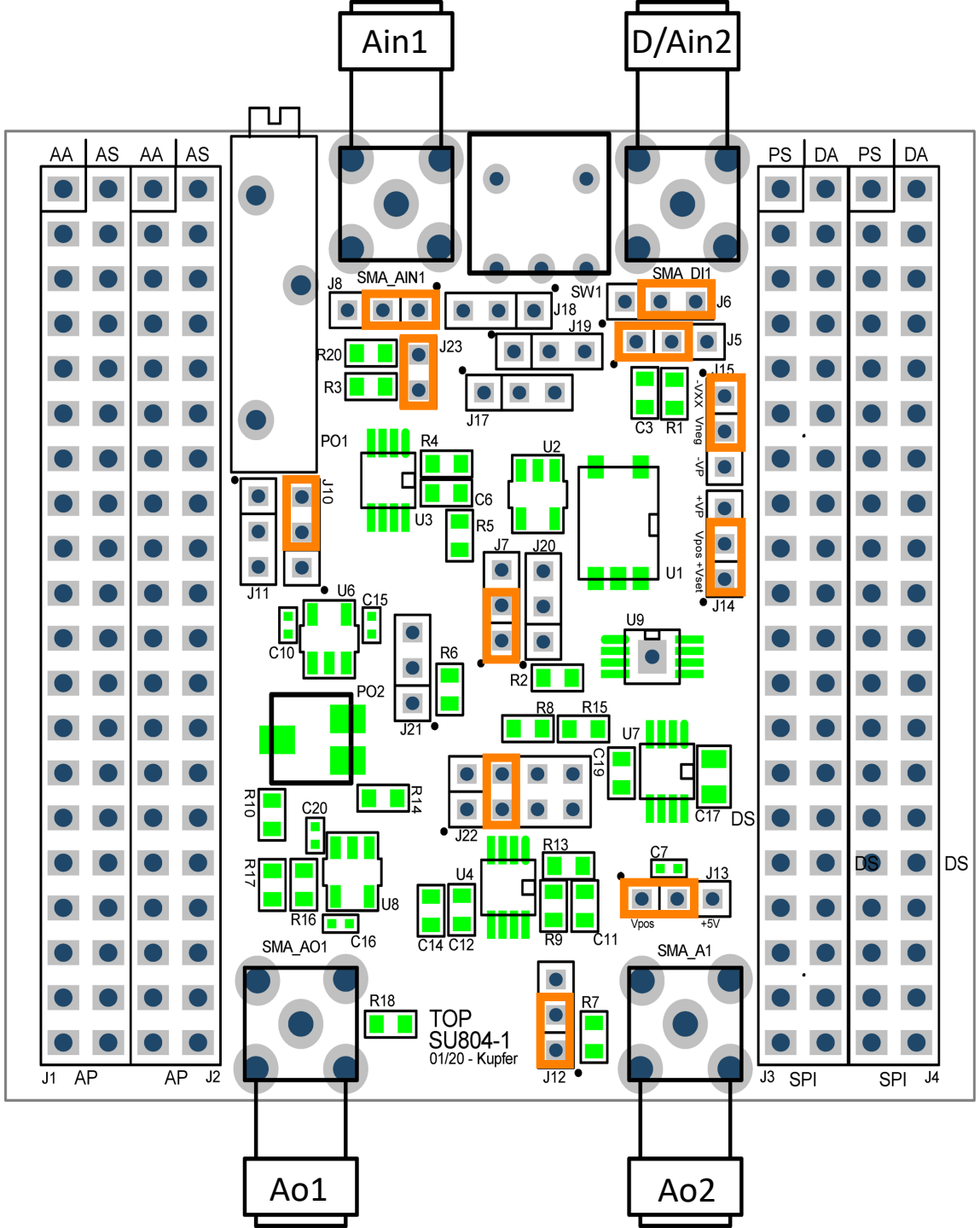

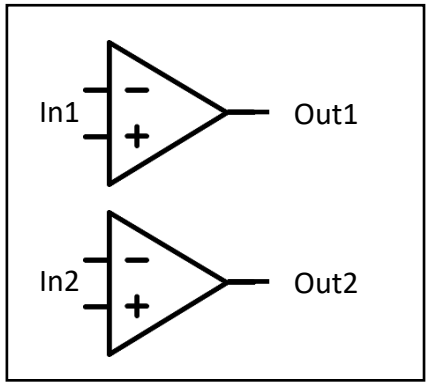

Universal Driver SU804: Config: External / Internal with manual switch (AIN1→ OP1 → Manual switch → OP2 → AO2)

Jumper Settings

V_Gain without 50 Ω termination ~ 1.7
If J23 removed: V Gain ~ 2.4

Output control logic – see logic table – switches from Internal to External Control

Power Select

Set +Vset=19V on DL800 for up to 17V output

Digital IN – switch control
Analog IN 2

5V Reference

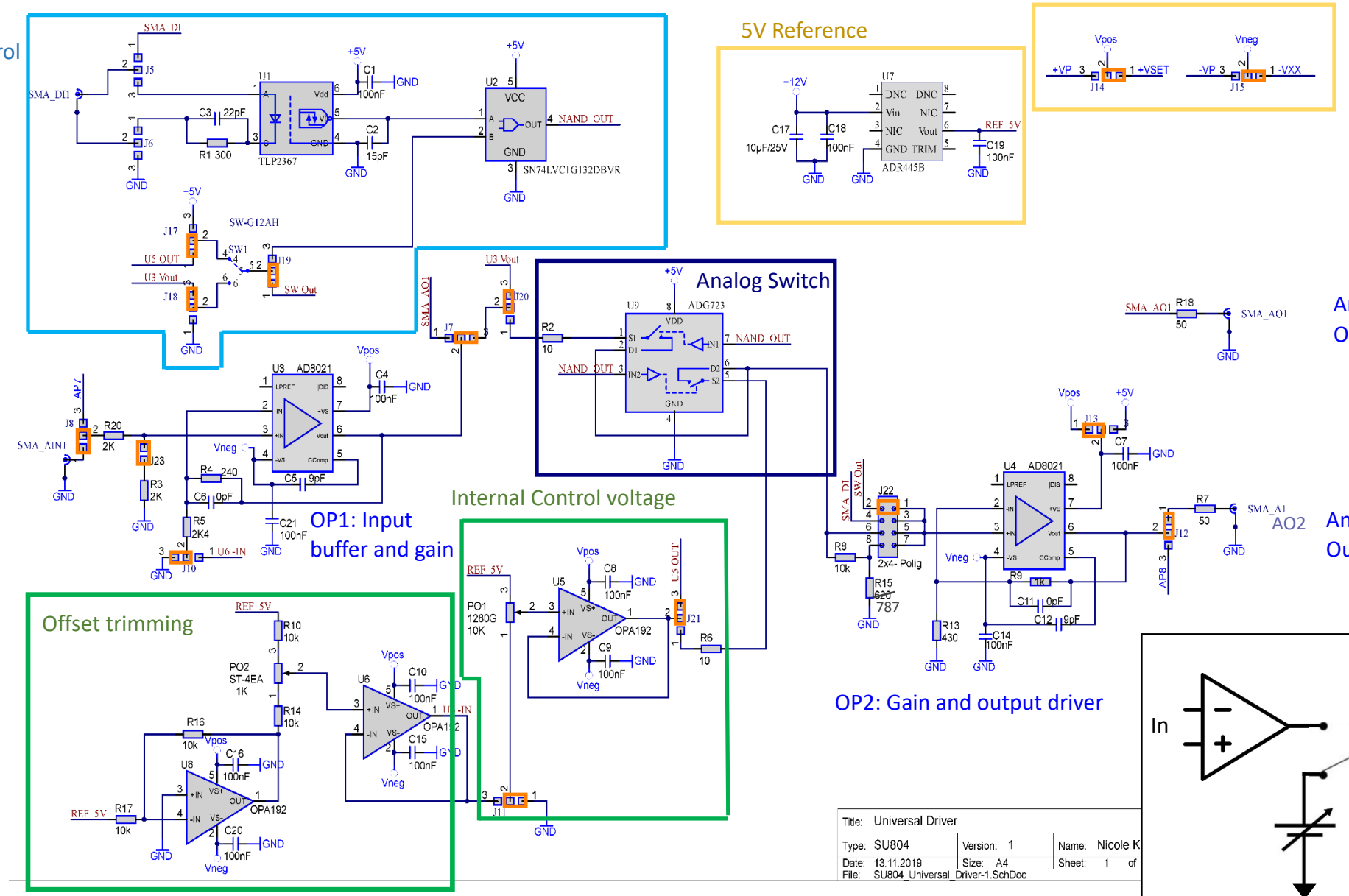

Jumper Settings

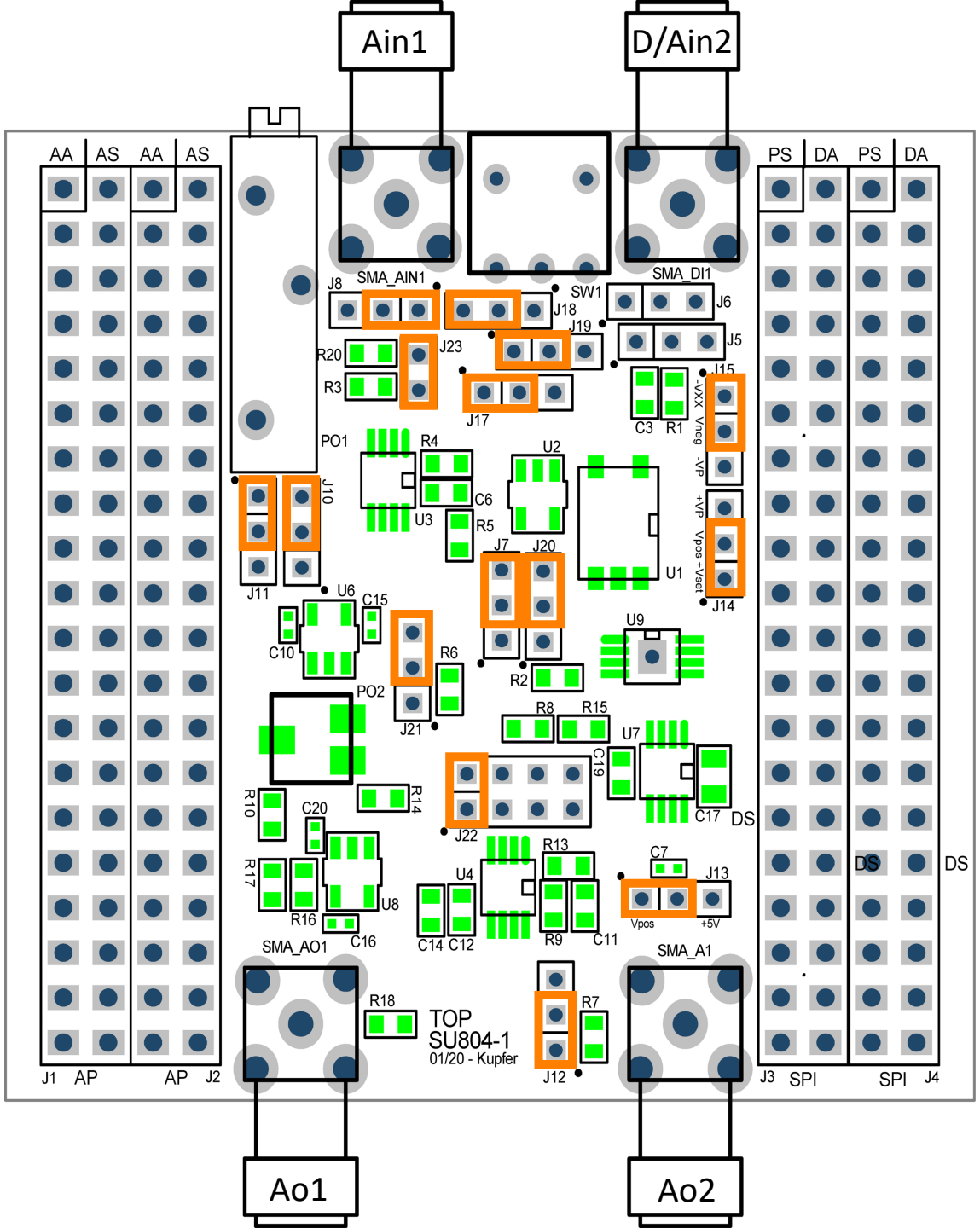

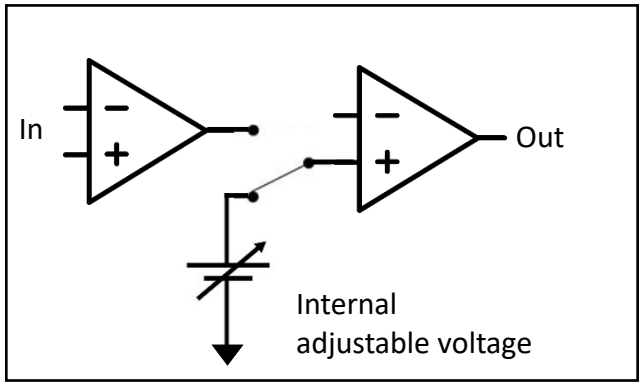

Power spectral density and Transfer function of universal driver SU804

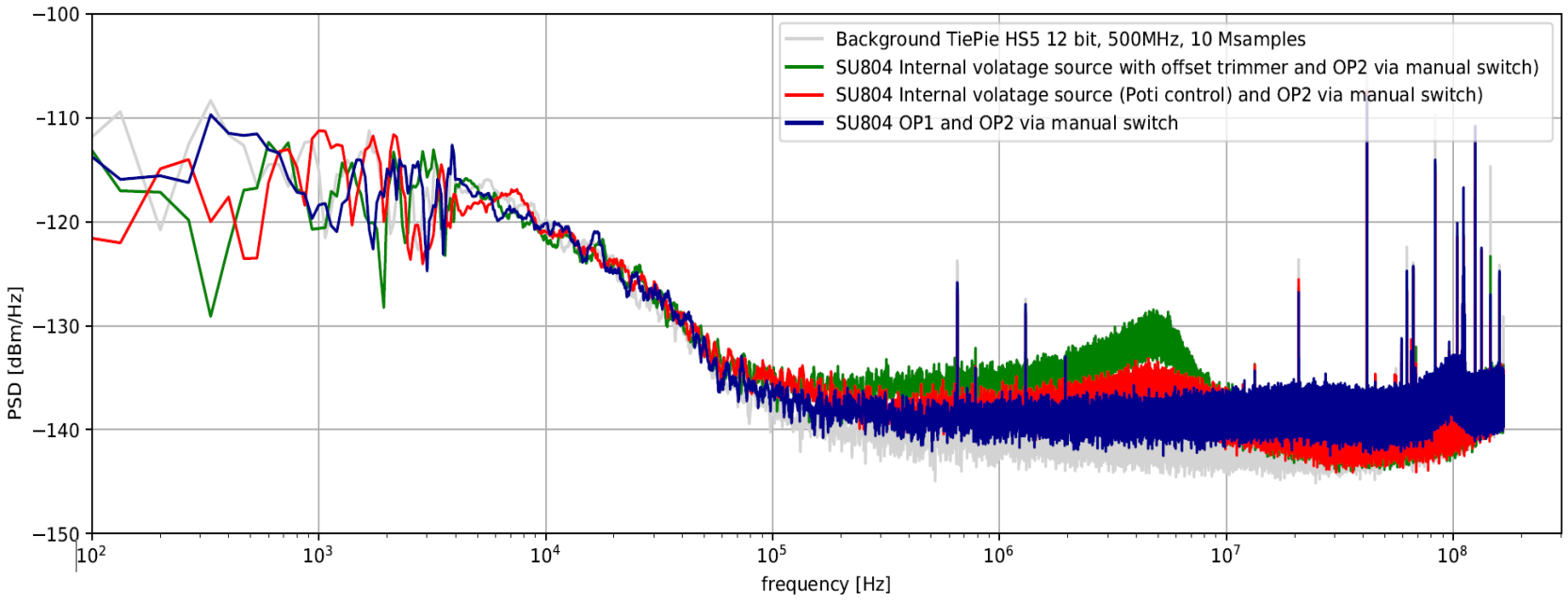

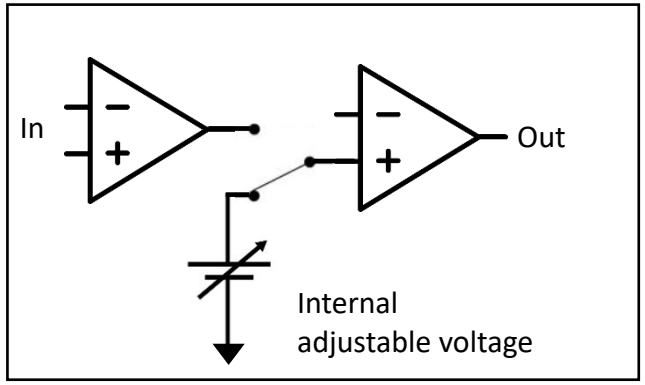

Vpos: + Vset=19V (J14 set to 2-3)
Vneg: -Vxx=-2.7V (J14 set to 2-3)
Power Spectral density, Setting: Analog In SMA_AIN1 set to GND with 50 Ohm. Analog output (SMA_A1) terminated with 50 Ohm.

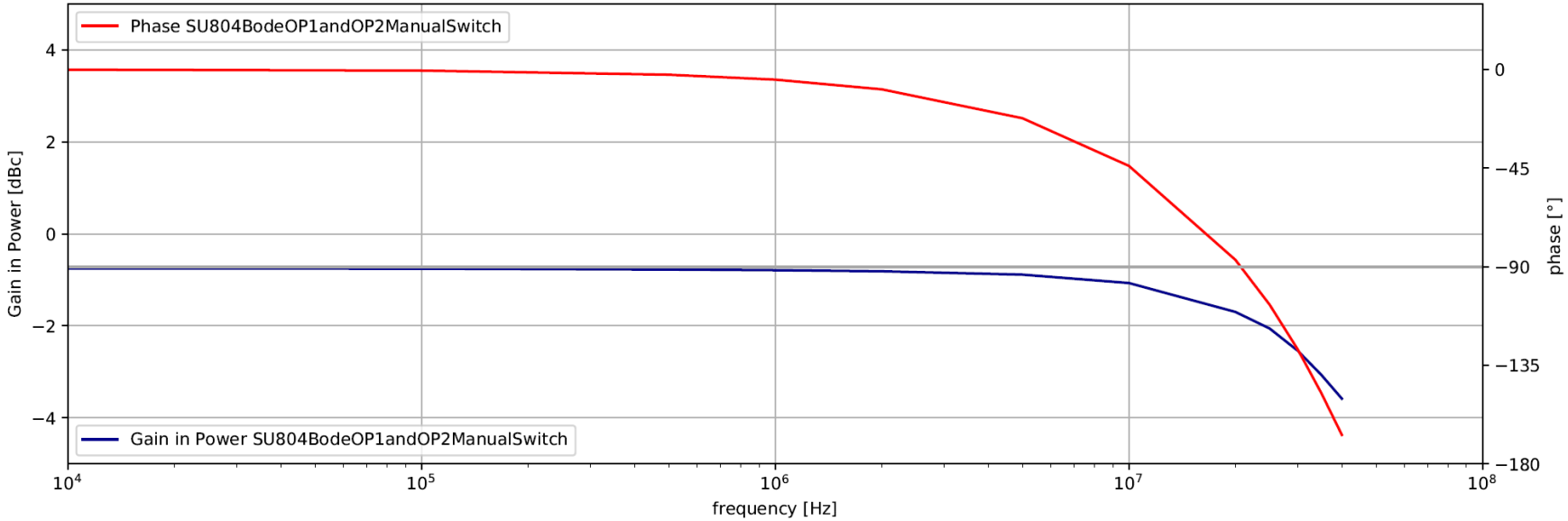

Transfer Function of Amplitude and Phase as function of modulation frequency, Setting: Analog In SMA_AIN1 set to 0.1V*cos(2*pi*f*t) . Analog output (SMA_AO1) terminated with 50 Ohm

Universal Driver SU804: Config: External / Internal with analog switch (AIN1→ OP1 → analog switch → OP2 → AO1)

Standard Jumper

V_Gain without 50 Ω termination ~ 1.7
If J23 removed: V Gain ~ 3.4

Output control logic – see logic table – switches from Internal to External Control

Power Select

Digital IN – switch control
Analog IN 2

2a

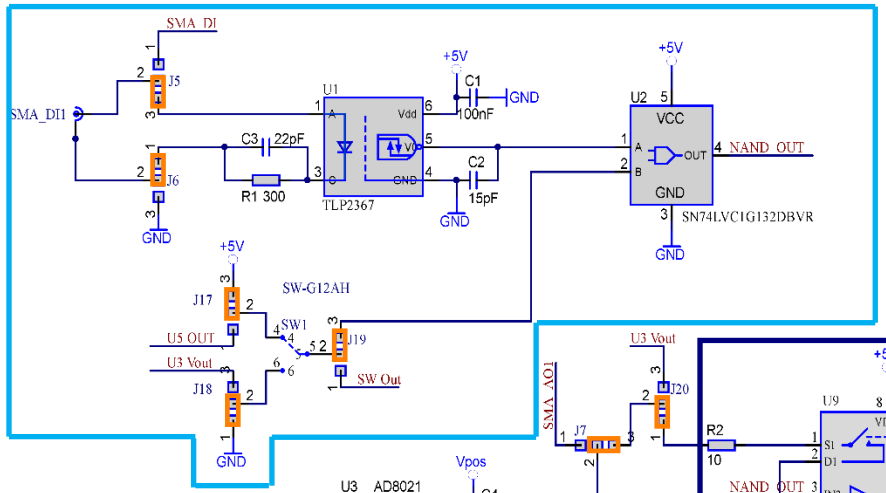

5V Reference

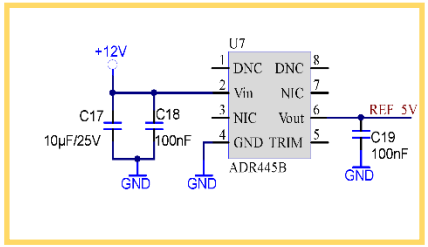

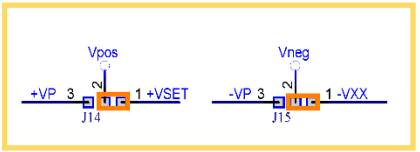

Set +Vset=19V on DL800 for up to 17V output

application:
VCO control to tune RF-frequency for AOMs

Analog Switch

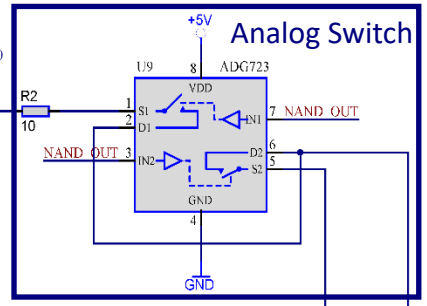

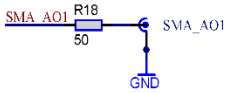

Analog Out 1
Output Control Voltage OP 1

Analog IN 1
External Control
Voltage input

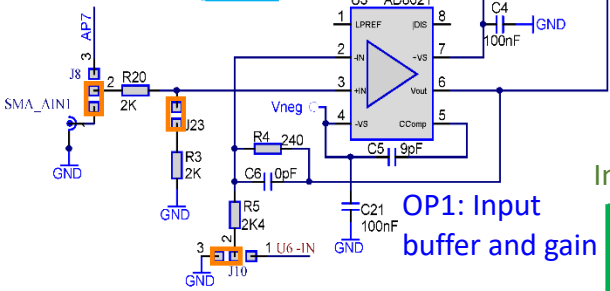

OP1: Input buffer and gain

Internal Control voltage

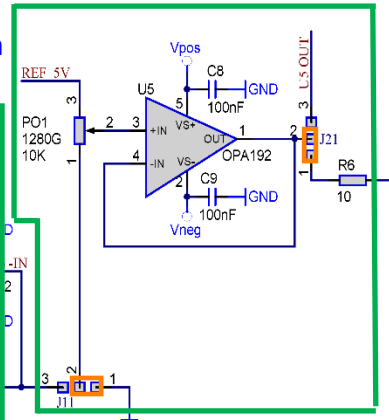

Offset trimming

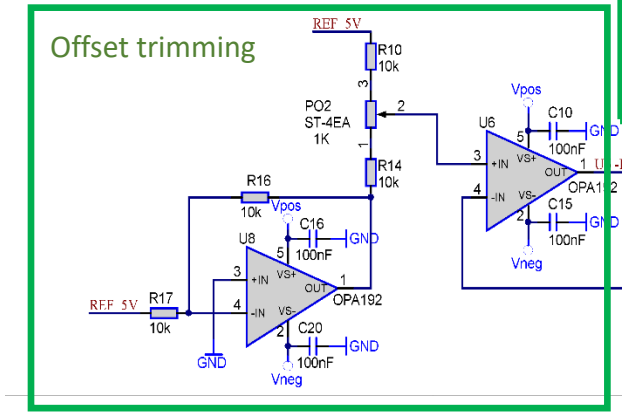

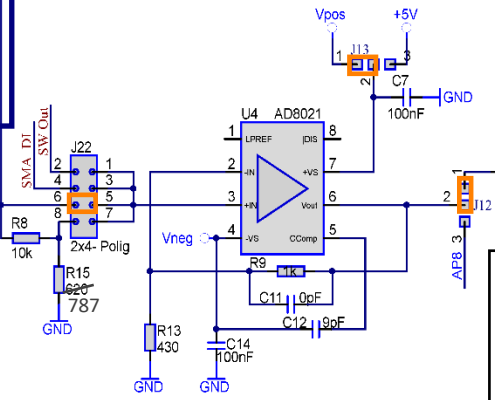

OP2: Gain and output driver

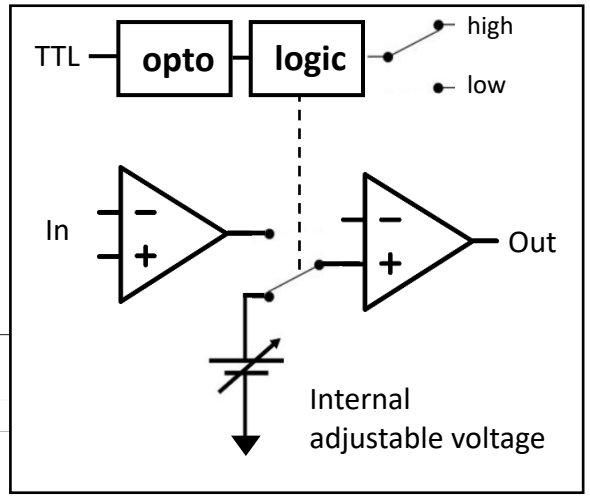

Analog Out 2
Output Control Voltage OP 2

Title: Universal Driver		
Type: SU804	Version: 1	Name: Nicole Kupfer
Date: 13.11.2019	Size: A4	Sheet: 1 of 1
File: SU804_Universal_Driver-1.SchDoc		

2a Jumper Settings

Standard Jumper

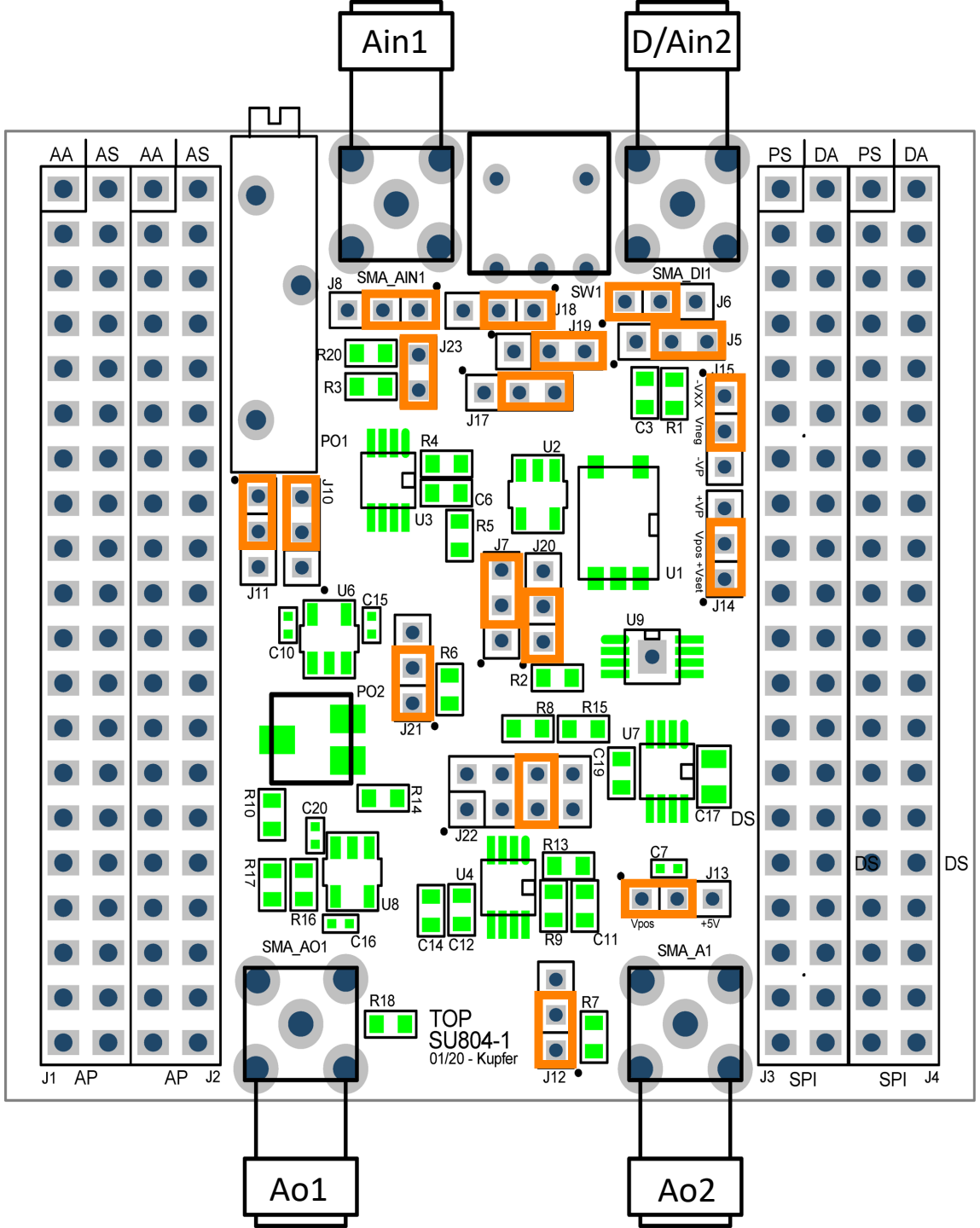

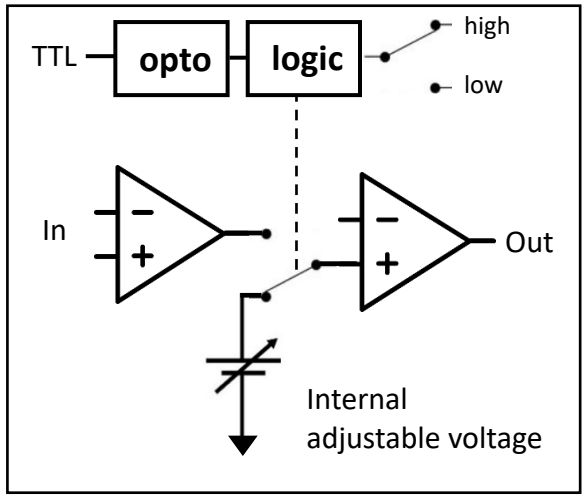

Vpos: + Vset=19 V (J14 set to 2-3)
Vneg: -Vxx=-2.7V (J14 set to 2-3)
OP1 (U3) and OP2 (U4) (J8 set to 1-2, J10 set to 2-3, J23 set, J7 set 2-3)
Power Spectral density, Setting: Analog In SMA_AIN1 set to GND with 50 Ohm. Analog output (SMA_A1) terminated with 50 Ohm.

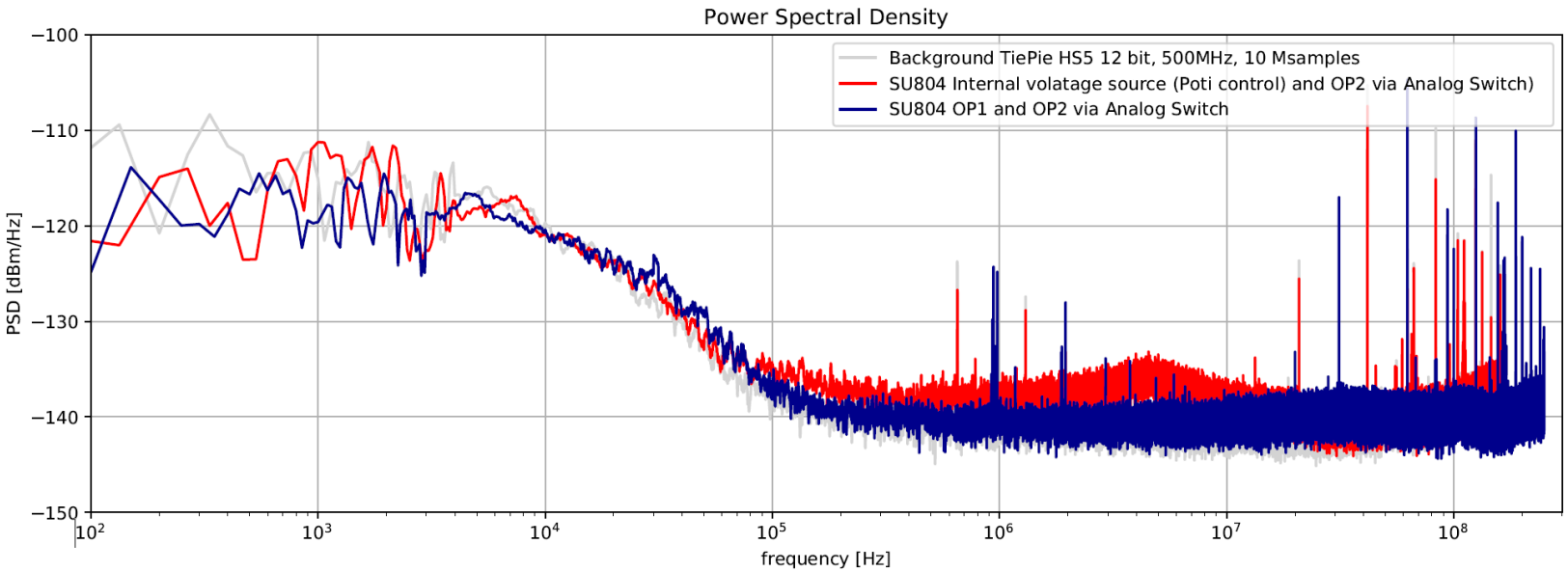

Bode Plot: Transfer Function of Amplitude and Phase as function of modulation frequency f
Setting: Analog In SMA_AIN1 set to 0.2V+ 0.1V*cos(2*pi*f*t) . Analog output 1 (SMA_AO1) terminated with 50 Ohm. *Note: Voltage must not be negative for version with analog switch (B). Therefore the offset is set to 0.15V*

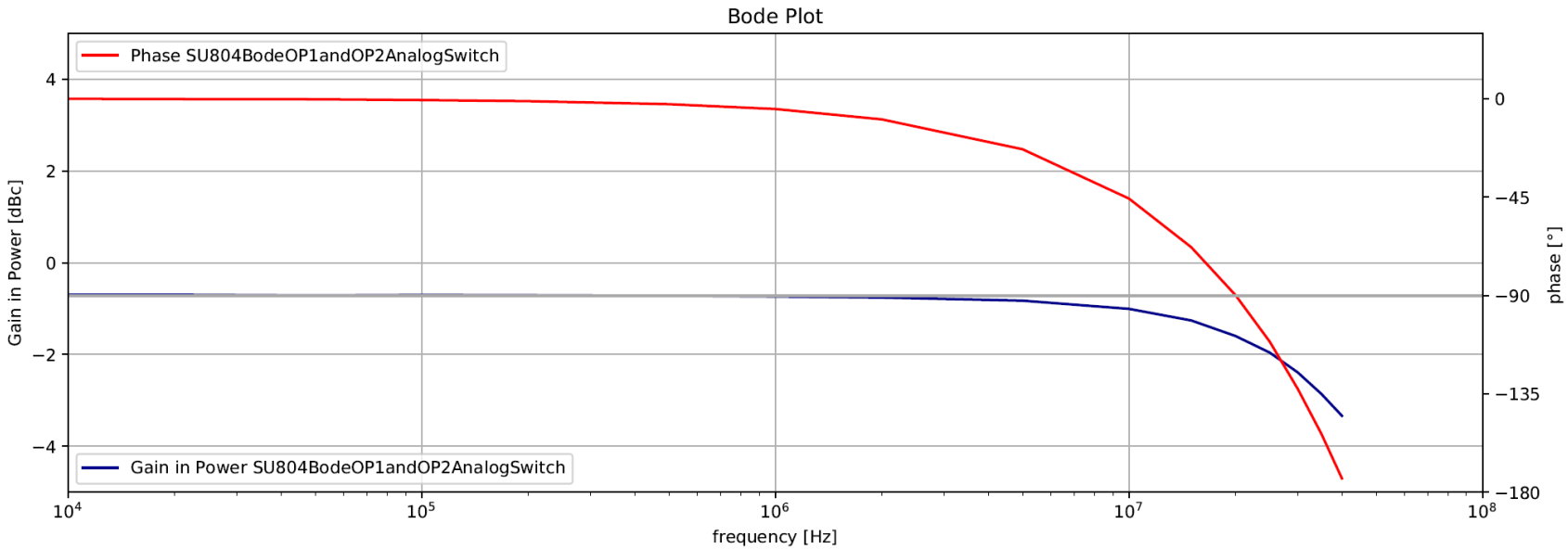

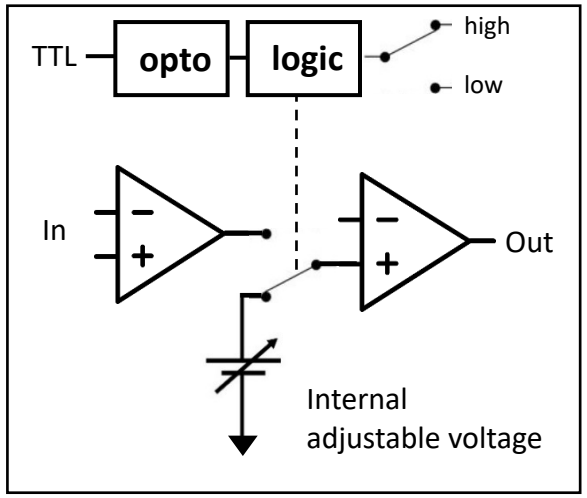

Universal Driver SU804: Config: External / Internal with analog switch (AIN1→ OP1 → analog switch → OP2 → AO1)

3a

Output control logic – see logic table – switches from Internal to External Control

V_Gain without 50 Ω termination ~ 0.1
If J23 removed: V Gain ~ 0.2

Power Select

Set +Vset=19V on DL800 for up to 17V output

Digital IN – switch control
Analog IN 2

5V Reference

application:
mixer driving to control RF-power for AOMs

Analog Out 1
Output Control Voltage OP 1

Analog IN 1
External Control
Voltage input

Analog Switch

OP1: Input
buffer and gain

Internal Control voltage

Offset trimming

OP2: Gain and output driver

Analog Out 2
Output Control Voltage OP 2

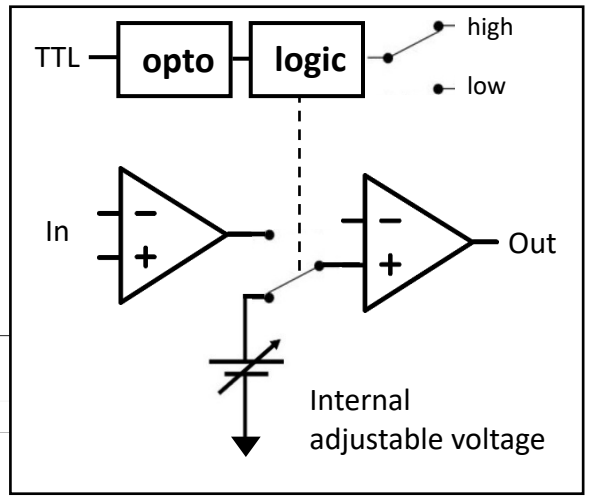

Title: Universal Driver
Type: SU804 | Version: 1 | Name: Nicole Kupfer
Date: 13.11.2019 | Size: A4 | Sheet: 1 of 1
File: SU804_Universal_Driver-1.SchDoc

3a Jumper Settings

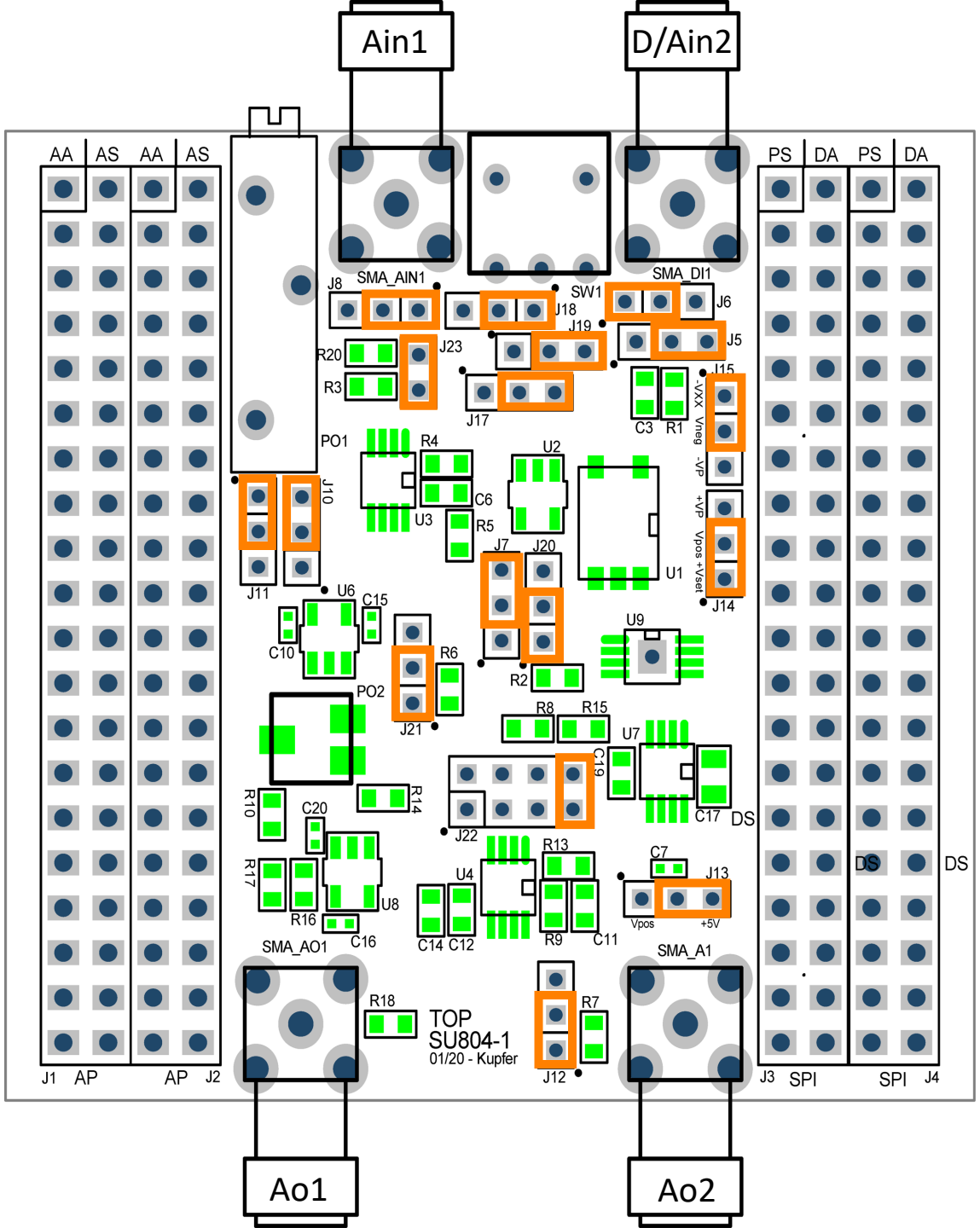

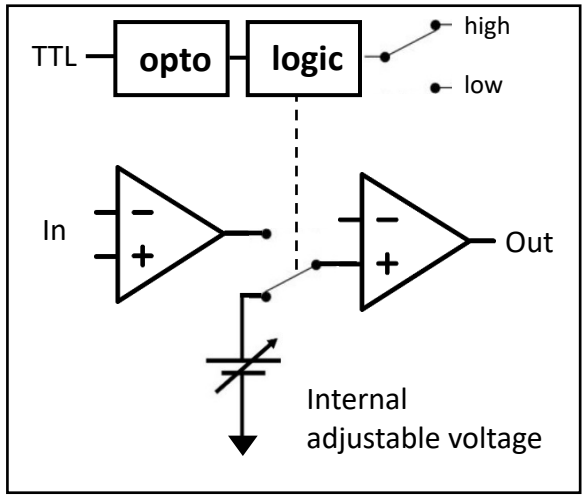

4 SU804 BNC connector board - jumper settings for Q-Dr006

Blue: factory jumper settings

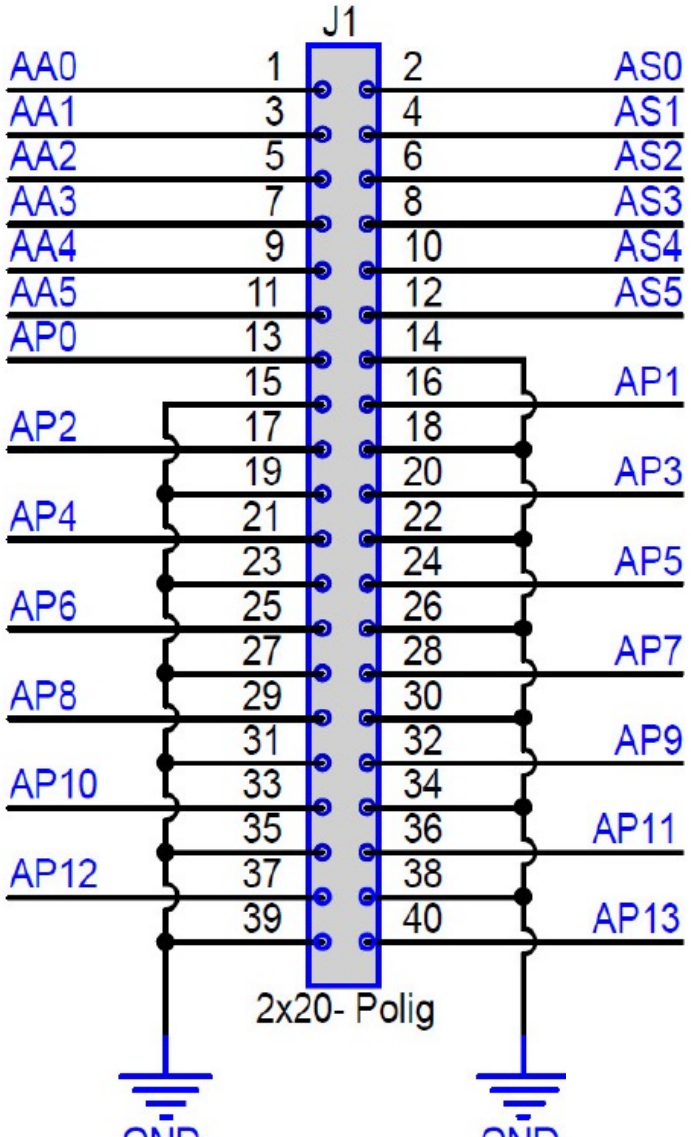

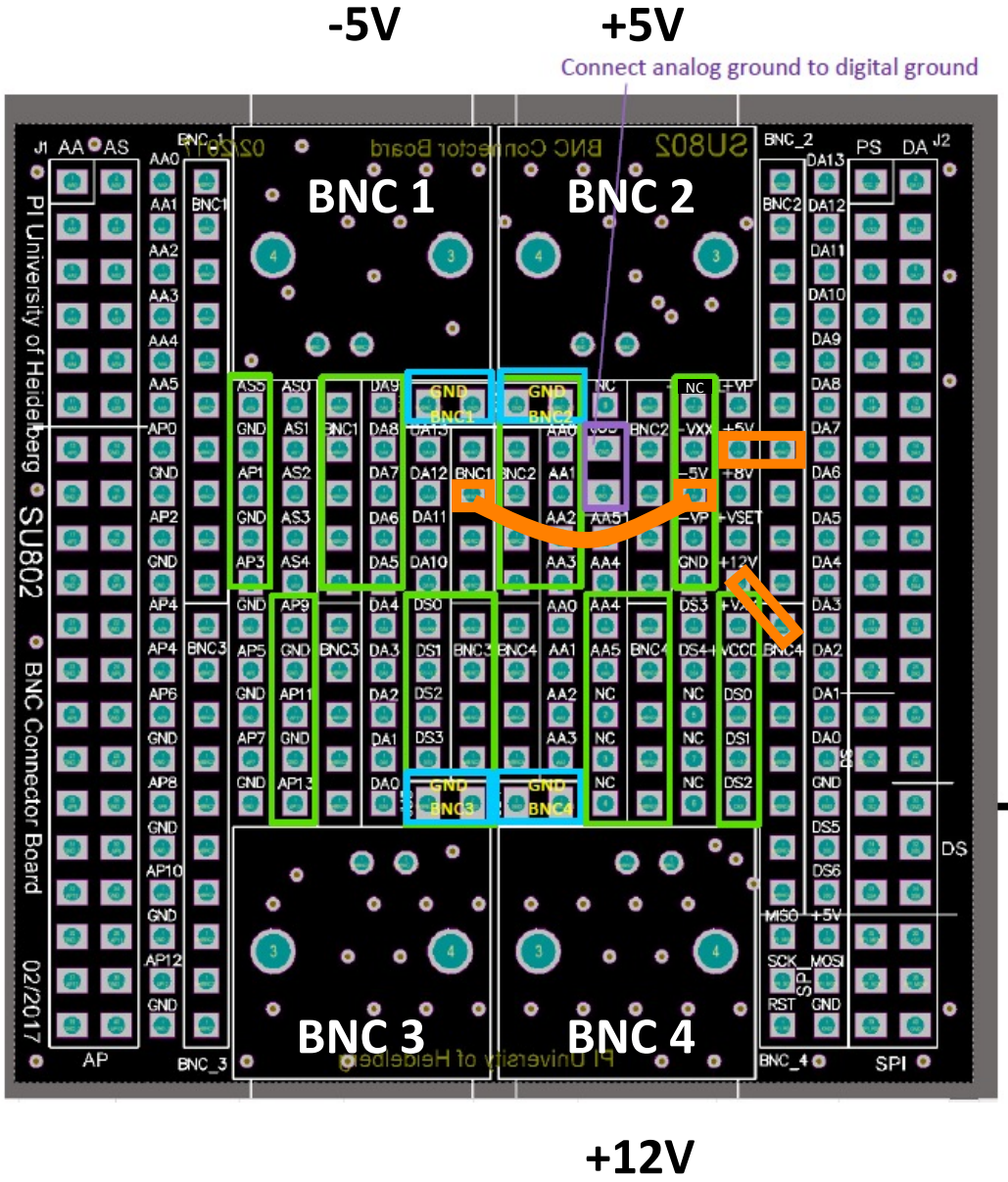

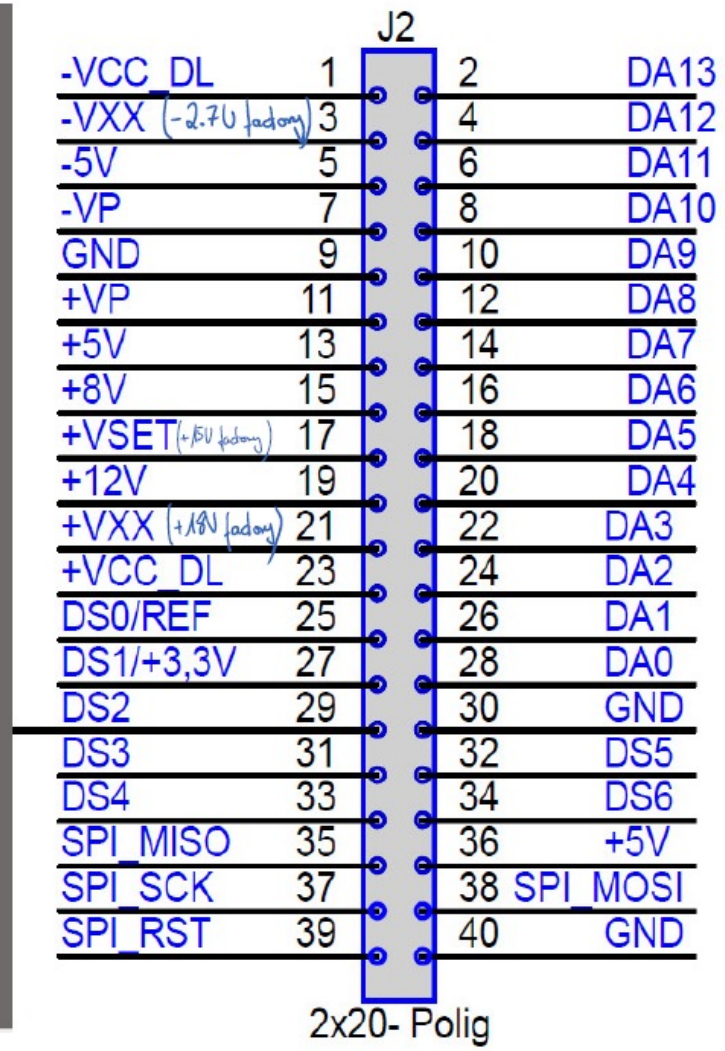

1 SU802, DL 800 (light) - jumper settings for Q-Dr006

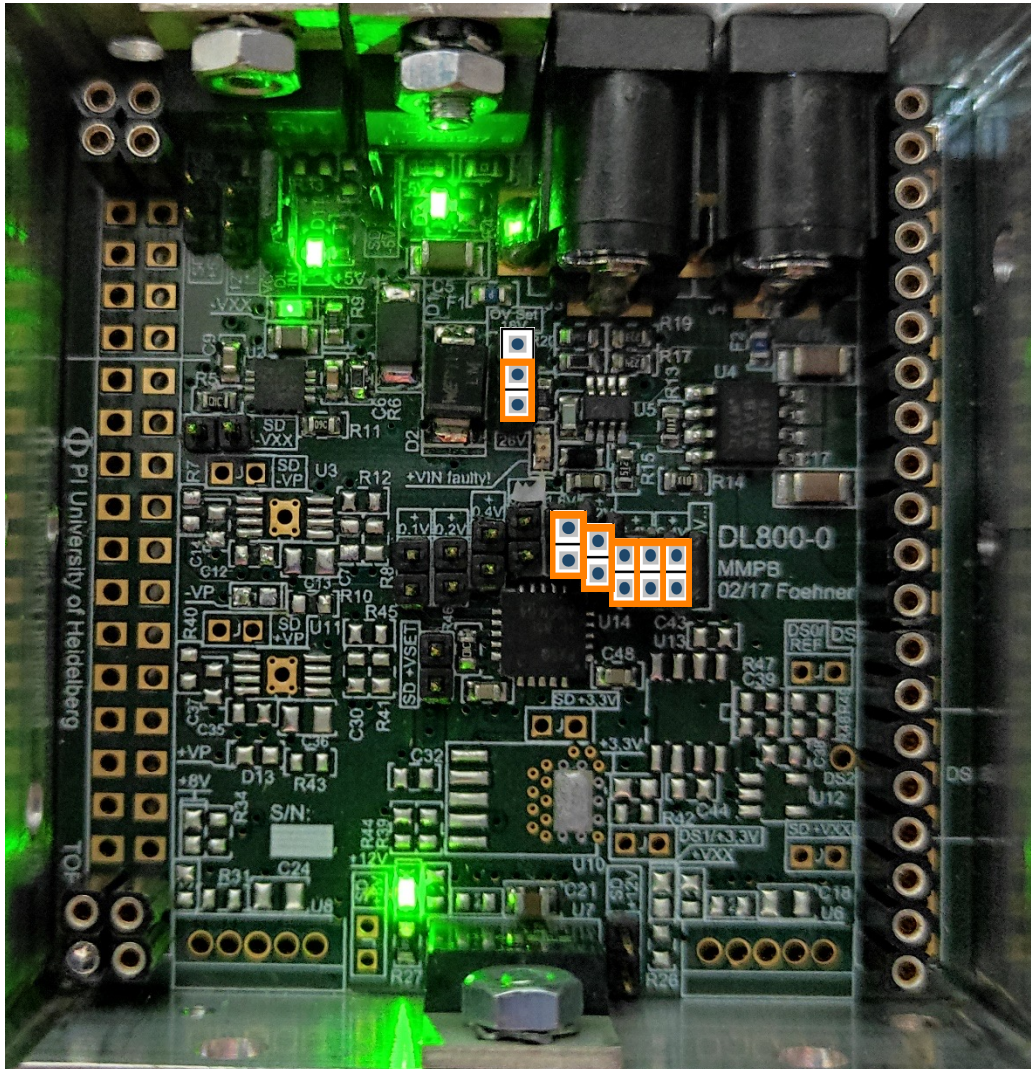

Universal Driver SU804 – TTL Control logic

Output control logic table

TTL	Opto	Switch	LogicOut	Output
0	1	**0**	1	**External Voltage**
0	1	**1**	0	**Internal Voltage**
1	0	0	1	External Voltage
1	0	1	1	External Voltage

TTL on 0: Controlled by Switch
Switch on 1: Controlled by TTL

Optocoupler TLP2367

6. Principle of Operation

6.1. Truth Table

Input	LED	Output
H	ON	L
L	OFF	H

NAND Chip sn74lvc1g132

From <https://de.wikipedia.org/wiki/NAND-Gatter>

A	B	Y = A NAND B
0	0	**1**
0	1	**1**
1	0	**1**
1	1	**0**

Switch ADG723

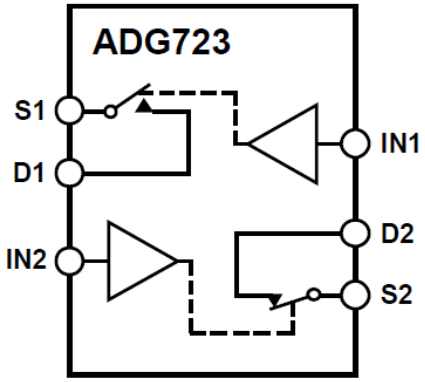

SWITCHES SHOWN FOR
A LOGIC "0" INPUT

Figure 3.

SU804 - Switching properties with Analog Switch

Switching Full scale (0-17V)
Risetime: 140ns

Switching 0-1V 50 Ohm terminated
Risetime: 21 ns

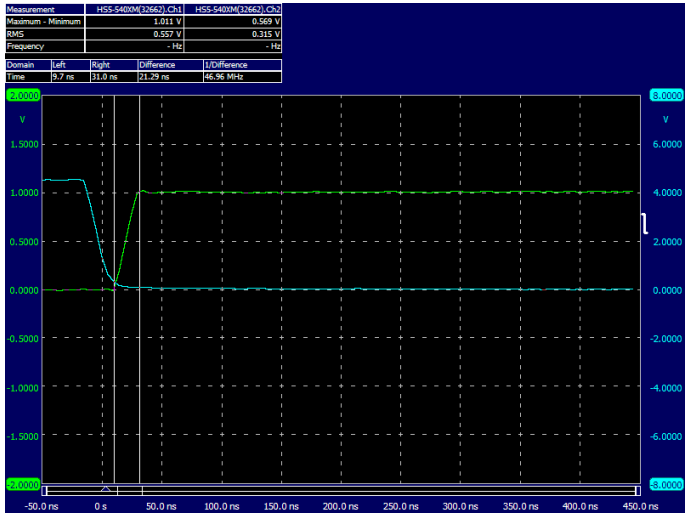

Switching 0-1V 50 Ohm terminated
Transient: 160 ns

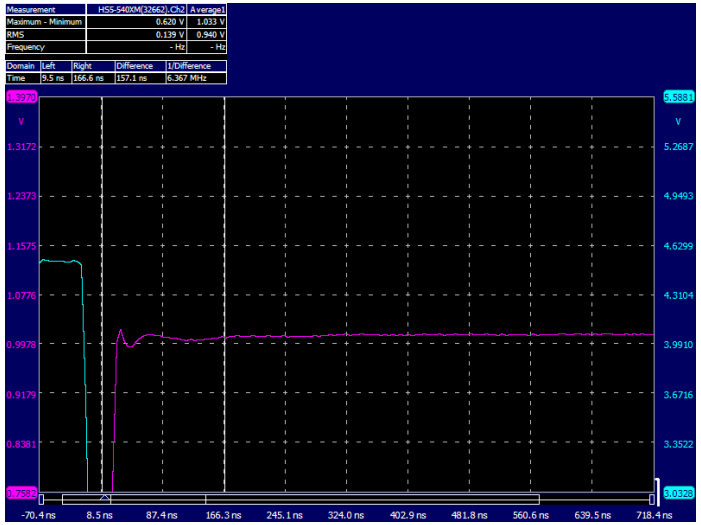

Switching Full scale (17-0V)
Falltime: 150ns

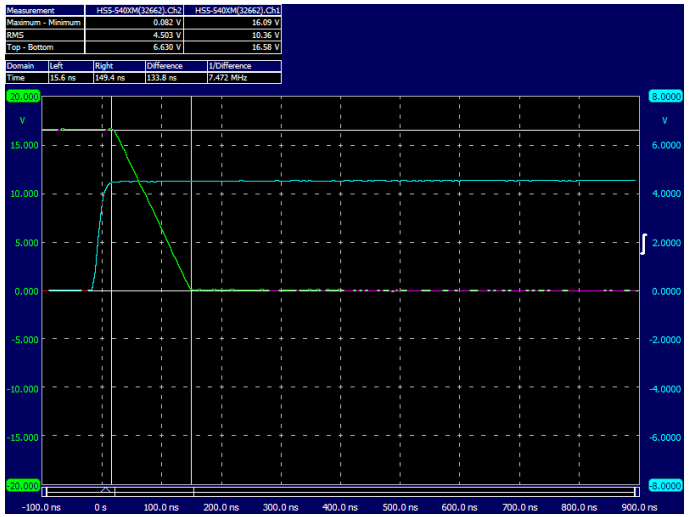

Switching 1-0V 50 Ohm terminated
Falltime: 22 ns

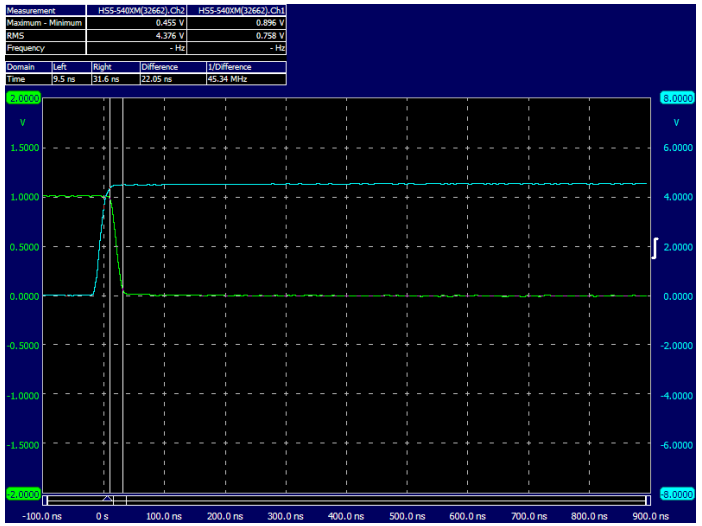

Switching 1-0V 50 Ohm terminated
Transient: 350 ns

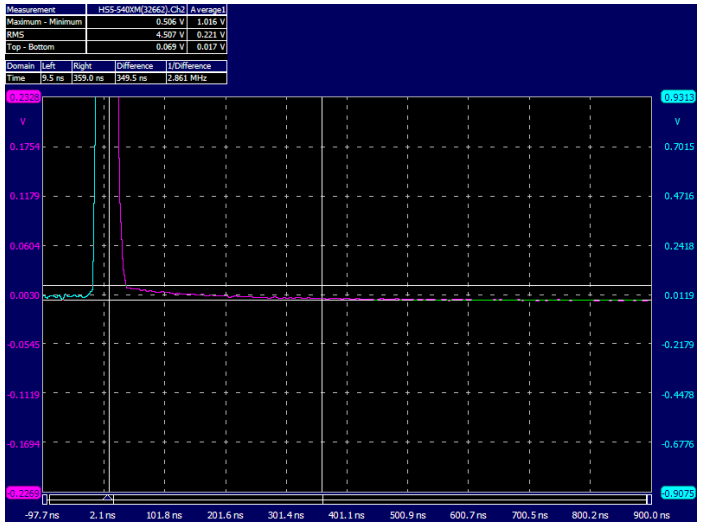

Änderungen im Schaltplan:

- Beschrifte Output 2: SMA_AO2

- Andere Bestückung Widerstände

  R10= 4.5K
  R14= 0
  R16= 1K

- Standard jumper Bestückung im Schaltplan vermerken (siehe nächste Seite)

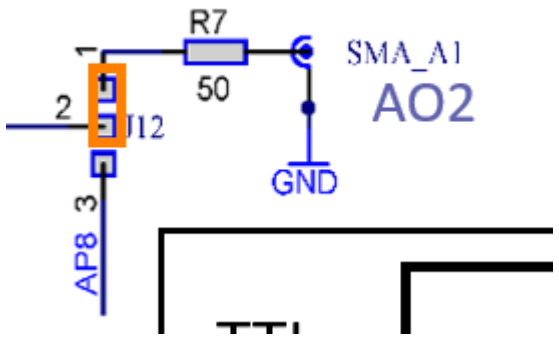

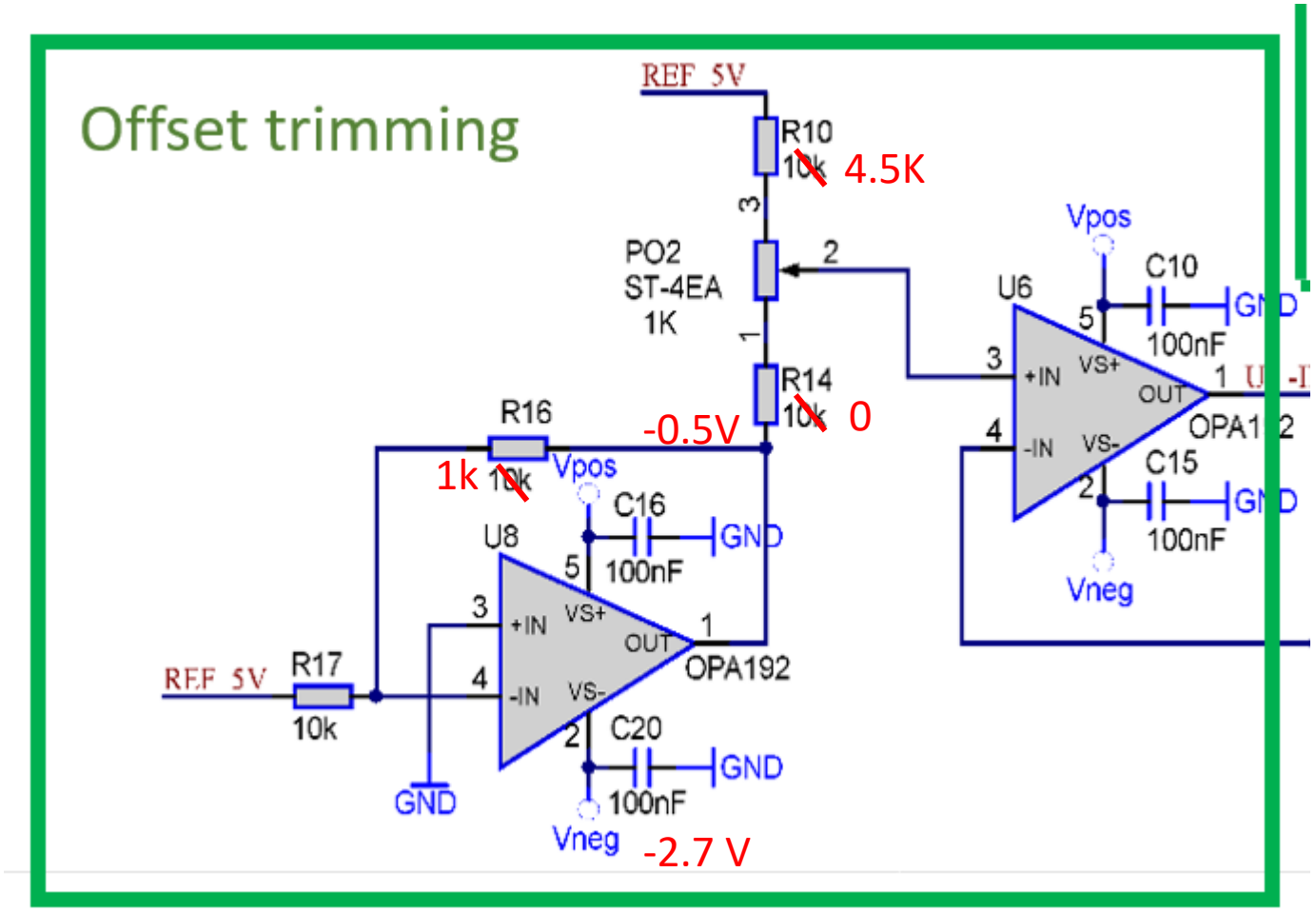

SU804 Notes production

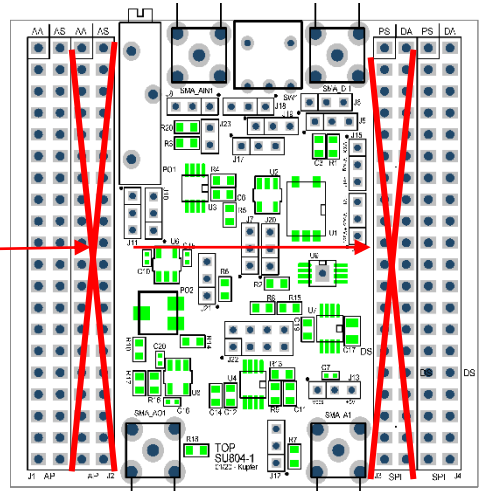

- **Replace R15 with 787 Ohms (0603)**
  https://www.mouser.de/c/passive-components/resistors/smd-resistors-chip-resistors/thick-film-resistors/?case%20code%20-%20mm=0603&resistance=787%20Ohms
- **Eventually use SMA connectors with short legs, that do not have to get cut (ask Gunnar, he used them for the SU807)**
- **Do not place the second douple-Pin-row**
- Check for the latest production version and check for additional notes on the workshop server
- Add Polarity Protection: Pin 39: Top: Block pin with solder. Bottom: Cut pin
- **Cut Pins of SMA connenctor on bottom side such that they don‘t touch the TO220 linear regulators of the DL800 Power supply board. If non-contacting can‘t be garantueed, put insulating tape ontop of the pins.**
- **Set standard jumper settings**
- Put PCBs into Aluminium case. Drawings of the cases can be found here:
  \\pi2\microcontroller\QD-Ultracold\Q-EI - e-lego\Cases and Heatsink Needed: **Case BNC or other case** If another case is needed , put new drawing into the folder for the drawings
- Label the finished boxes with the Part-number SU804
- **Label the outputs (D/Ain2, Ain1, Ao1, Ao2)**
- Add some notes to the workshop server if there has been some modifications to the previous production version
- If not available yet, make pictures of the produced component and put them on the workshop server
- If not available yet, leave one module in the e-workshop Muster box and label it with „Muster E-Werkstatt“

e-lego module

SU807 Analog PI-Controller

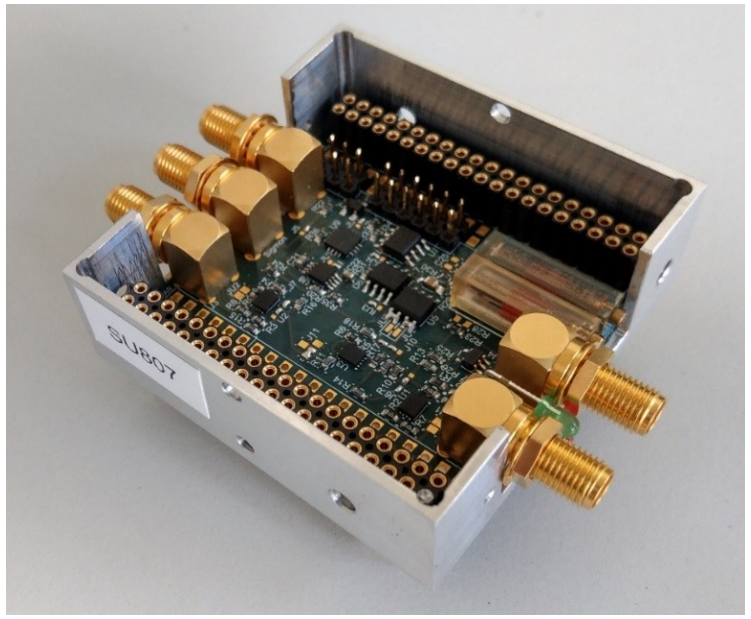

P∫

BW: 90° Phase shift: 20 MHz
- 3dB Gain: >40 MHz

PSD: -130 dBm / Hz @ high integrator gain (risetime 15 ns, C_I= 1pF)
PSD: -140 dBm / Hz @ low integrator gain (risetime 1 µs, C_I=100pF)

Input impedanz: 50 Ohm, differential input

Max input Voltage: 4.5 V (50 Ohm input impedanz)
Max output Voltage : 9 V (4.5 V over 50 Ohm load)

Recommended Supply at DL800: Neg: 7.5V, Pos: 15V

Set Vset to 6V at DL800: jumper 1.4V (+3.2+0.8+0.4+0.2) V

Status LEDs: Red: error upper limit reached
Green: error lower limit reached

Negative voltage Limiter: set jumper to JU14: Negative Voltage limited to about -75mV

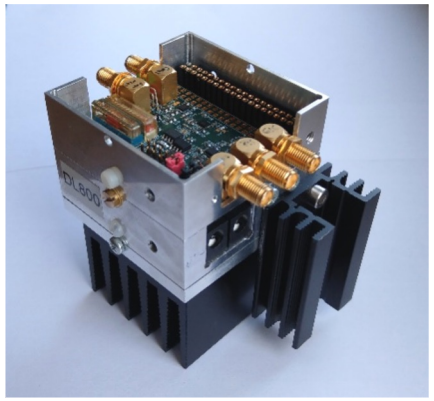

Use with DL800 plus heat sinks.

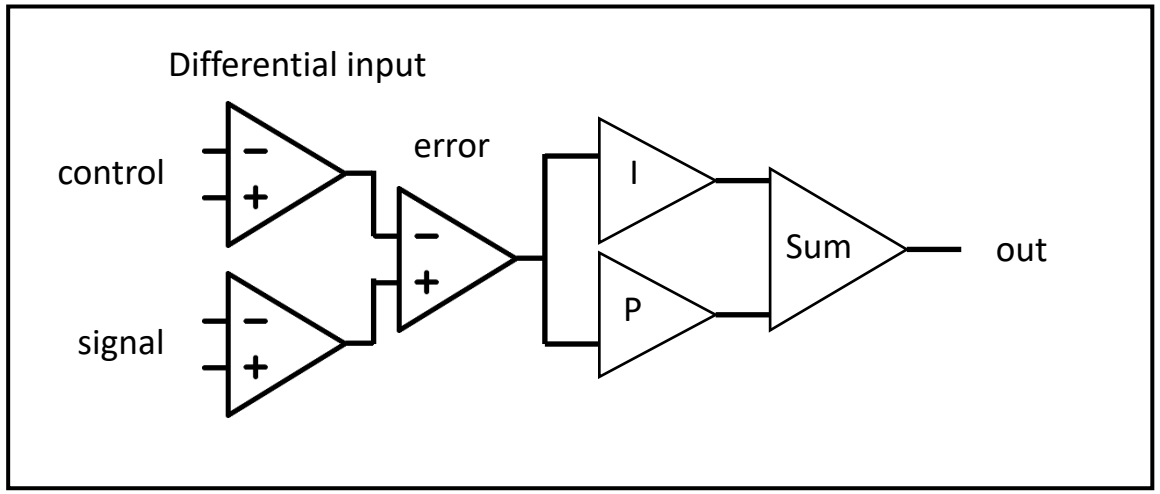

\\147.142.16.140\geraete\geraete\SU\SU807_PI_Controller

Open loop transfer function SU807

Bandwidth: 90° Phase shift: 20 MHz

Gain Measurement: bandwidth limited by test equipment (AWG 40 MHz)

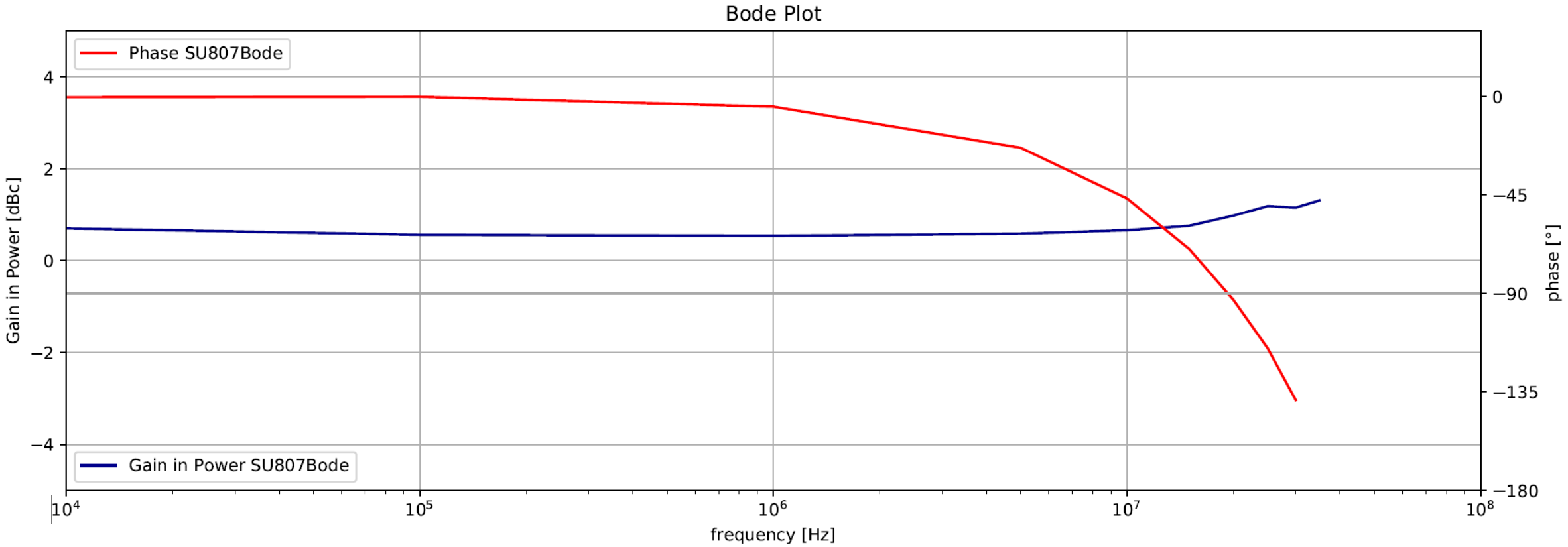

SU807-2 Setting up Power Supply

Set up DL 800:

-Vxx	set to -2.7V
+12 V	needs to be available
V-	Jumper select (-Vp set to 6V)
V+	Jumper select (+Vset set to 6V)

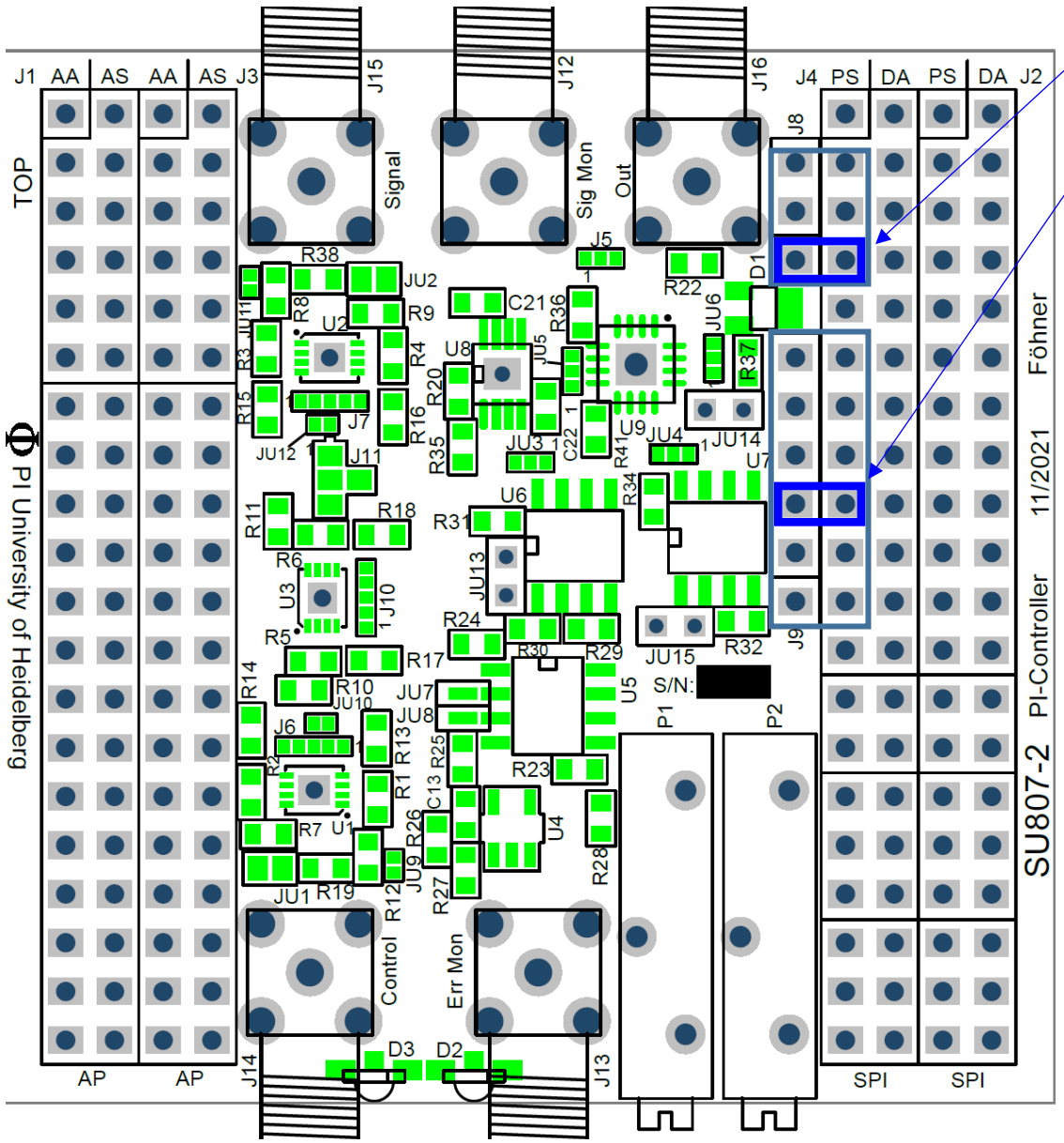

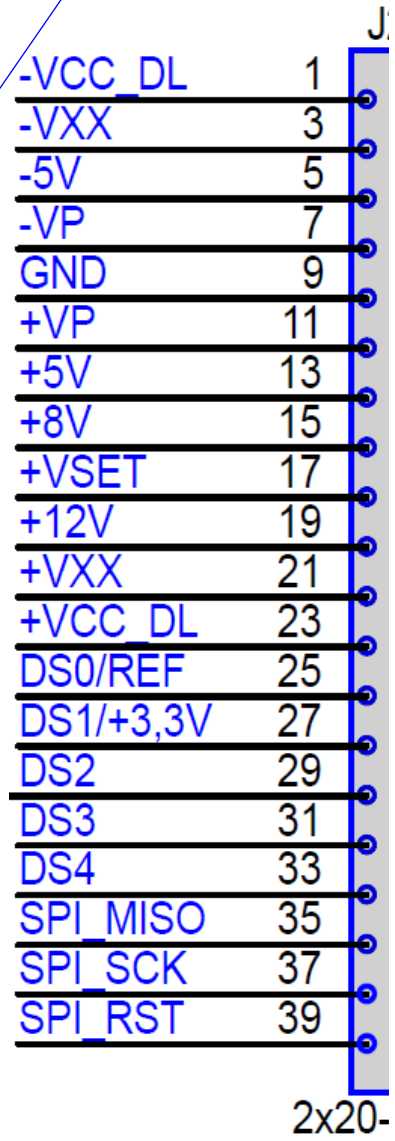

SU807-2
PI-Controller

Input

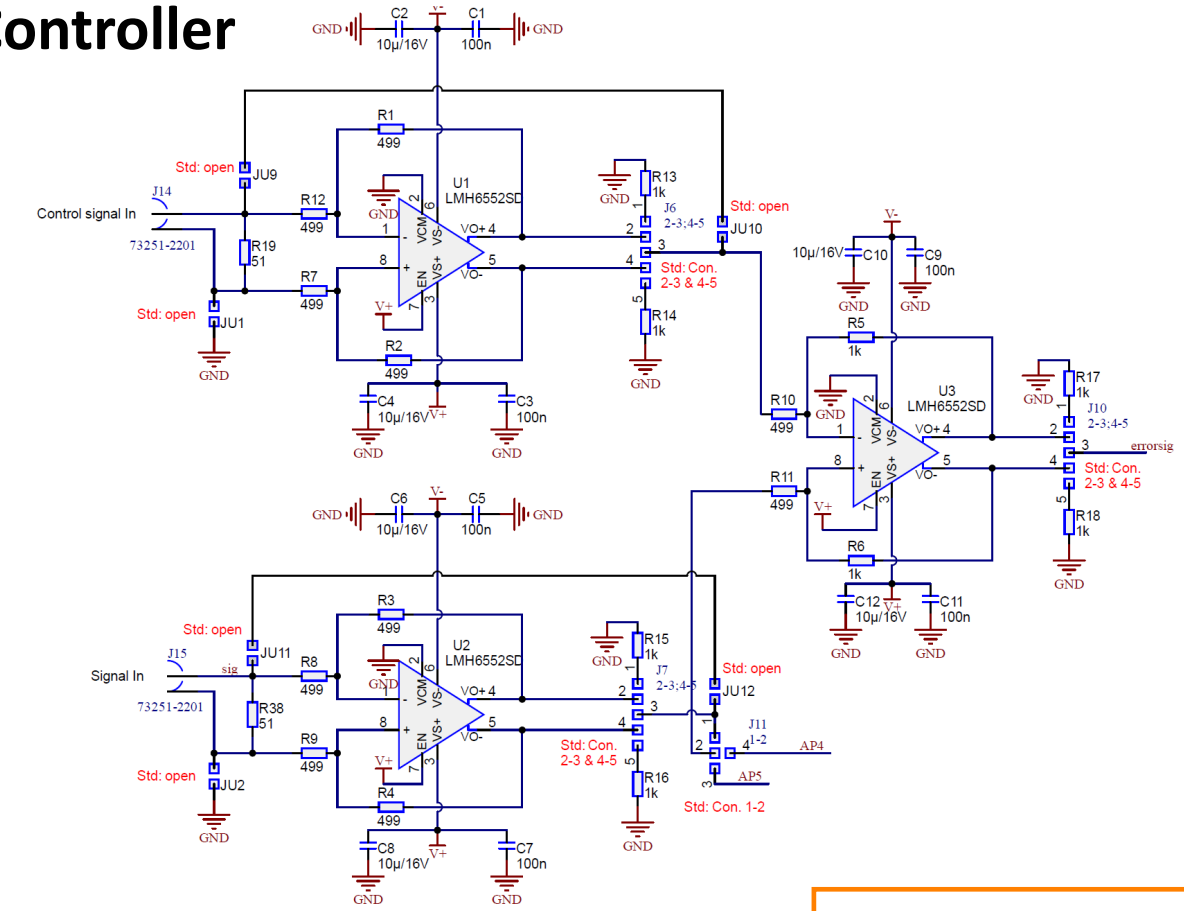

Error

P,I

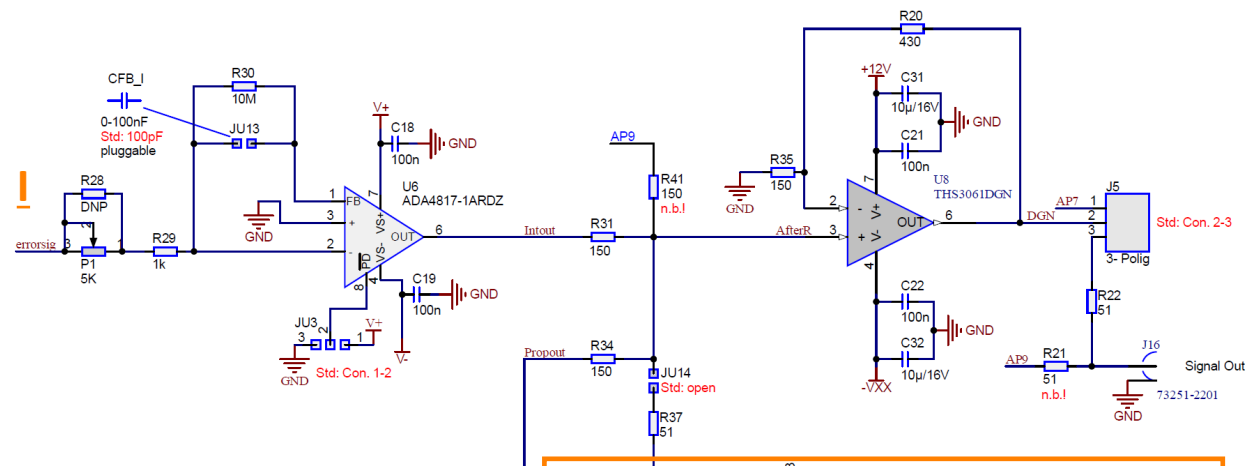

Output adder

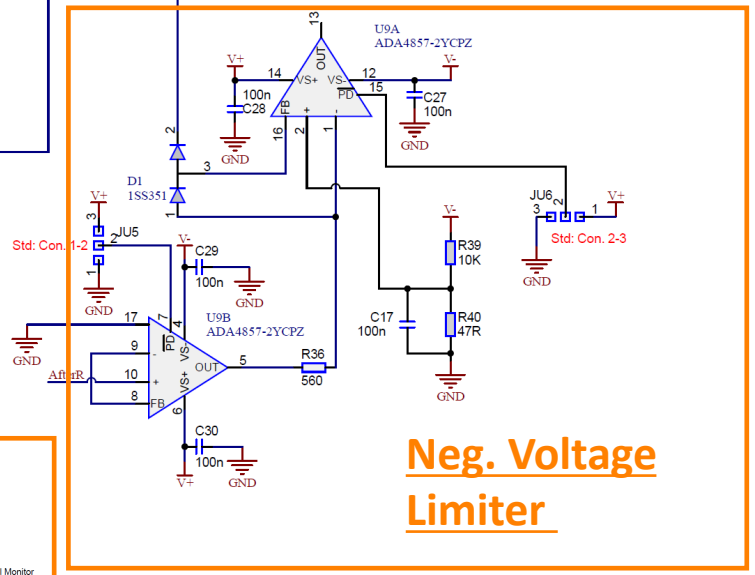

Neg. Voltage Limiter

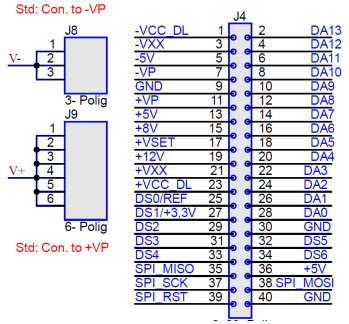

Supply voltage select

-(V-) + (V+) must not exceed 13.2V (abs max LMH6552)

if -Vp and +Vp do not supply enough current (max 150mA, load depening on load of monitor) use [-5V,+5V] or [-5V, Vset=+6V]

Monitors

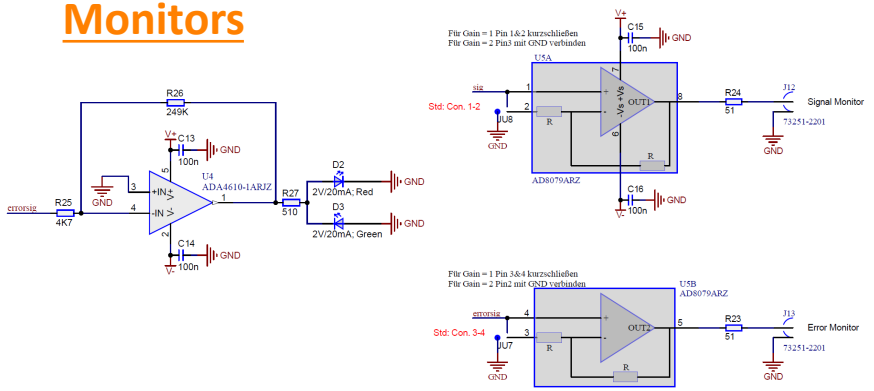

\\147.142.16.140\geraete\geraete\SU\SU807_PI_Controller

SU807-2 Step response and Power Spectral density

C_I=1pF

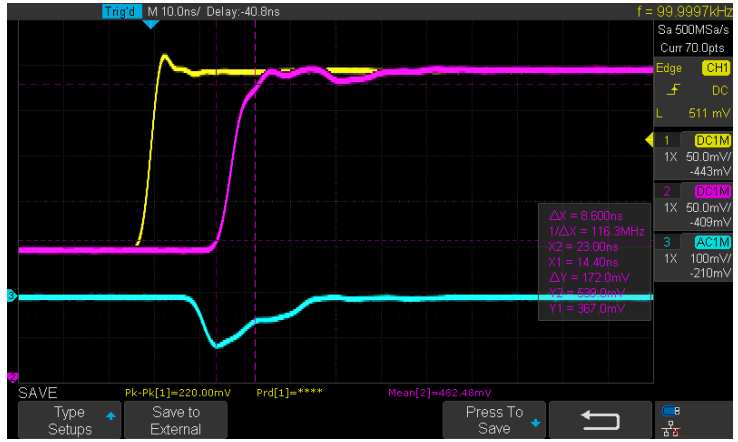

200 mV step: rise time: 15 ns

C_I=100pF

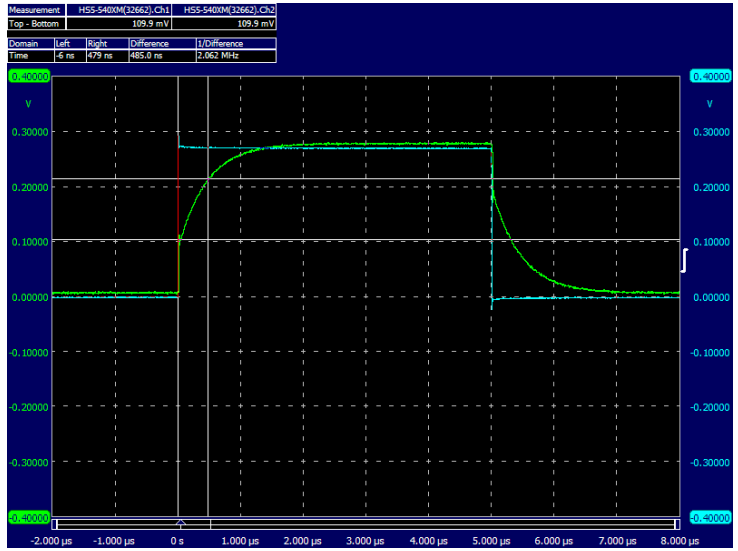

300 mV step: rise time: 1µs

C_I=1pF
closed loop

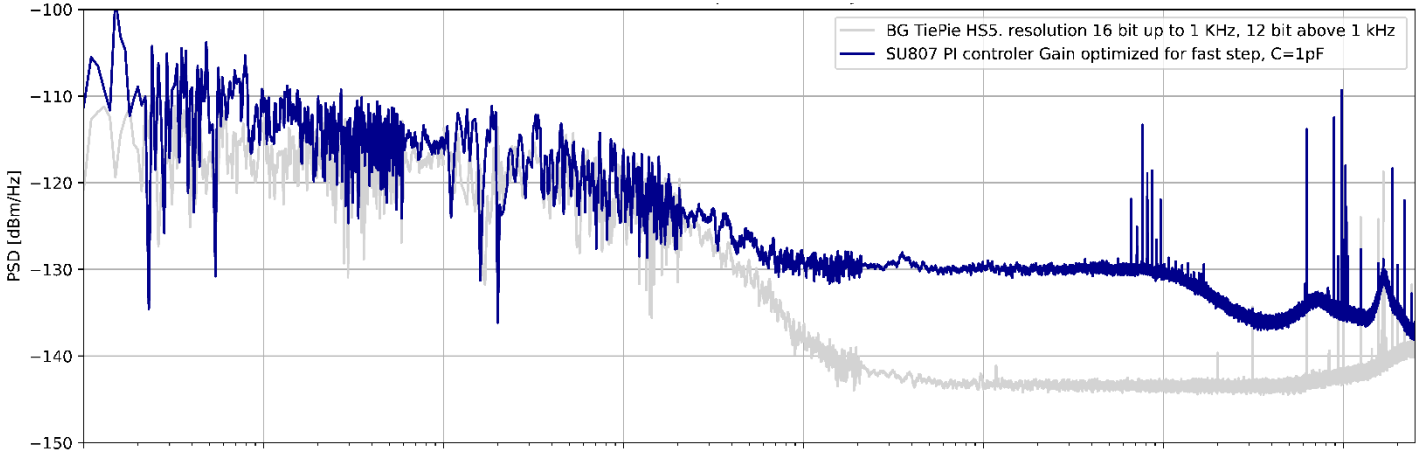

C_I=1pF
open loop

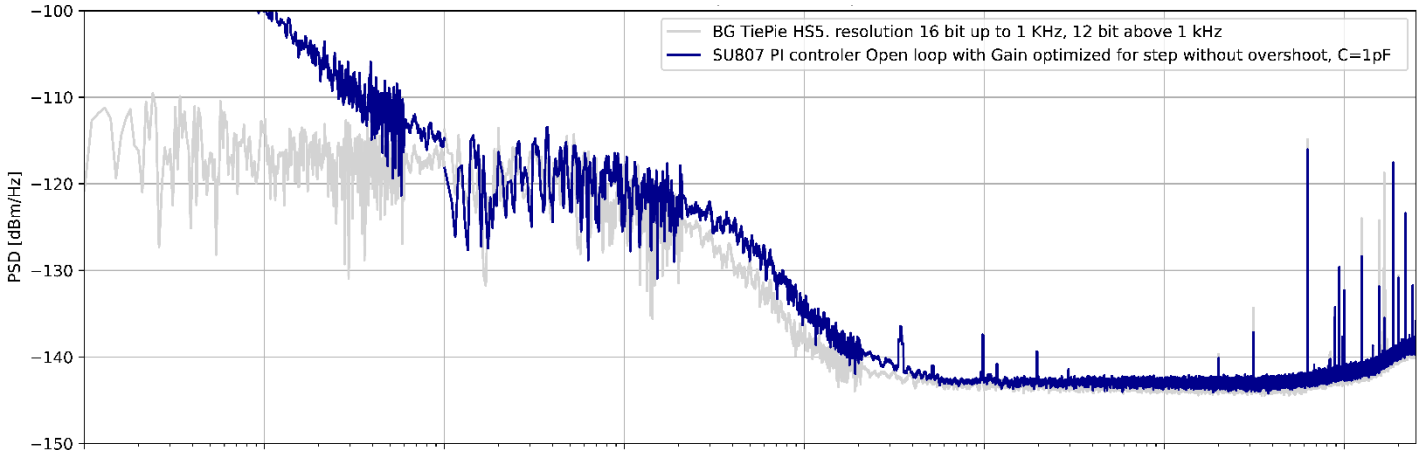

C_I=100pF
closed loop

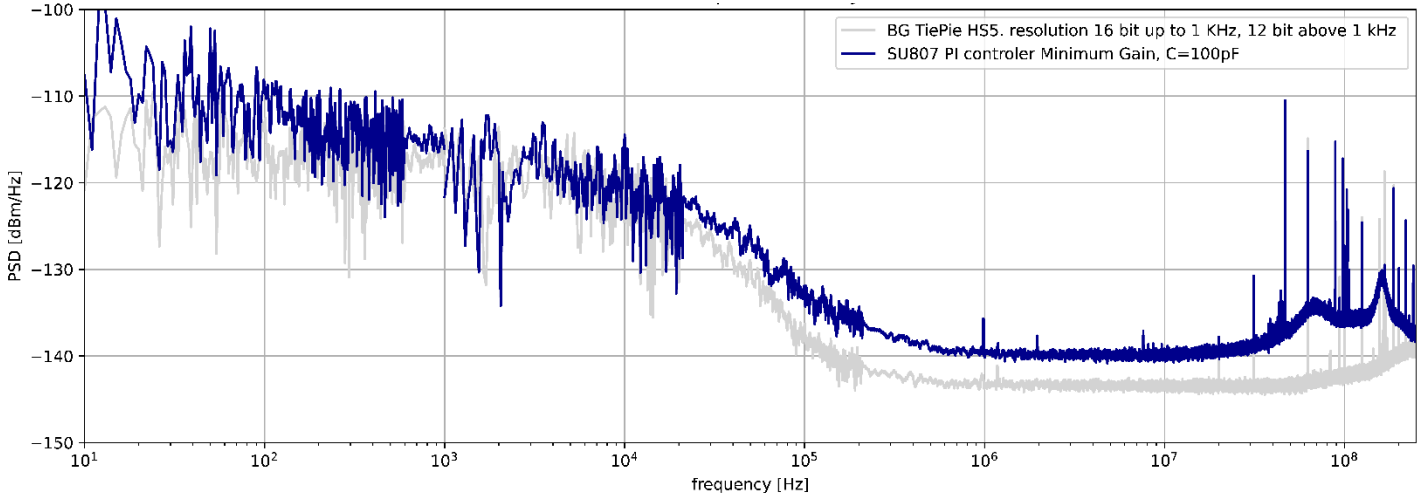

SU807-2 Voltage noise spectral density

C_I=1pF
closed loop

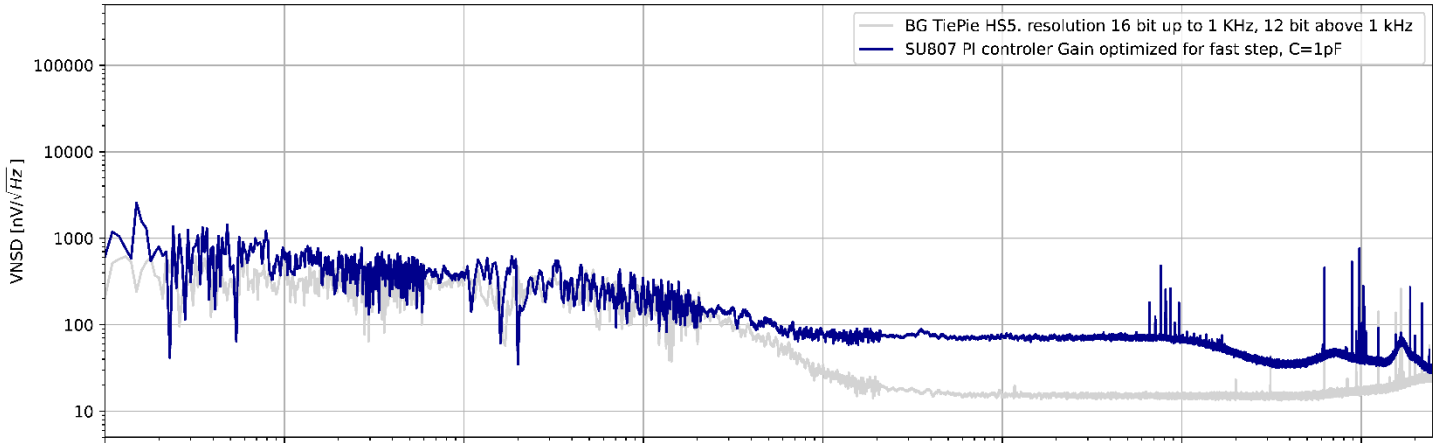

C_I=1pF
open loop

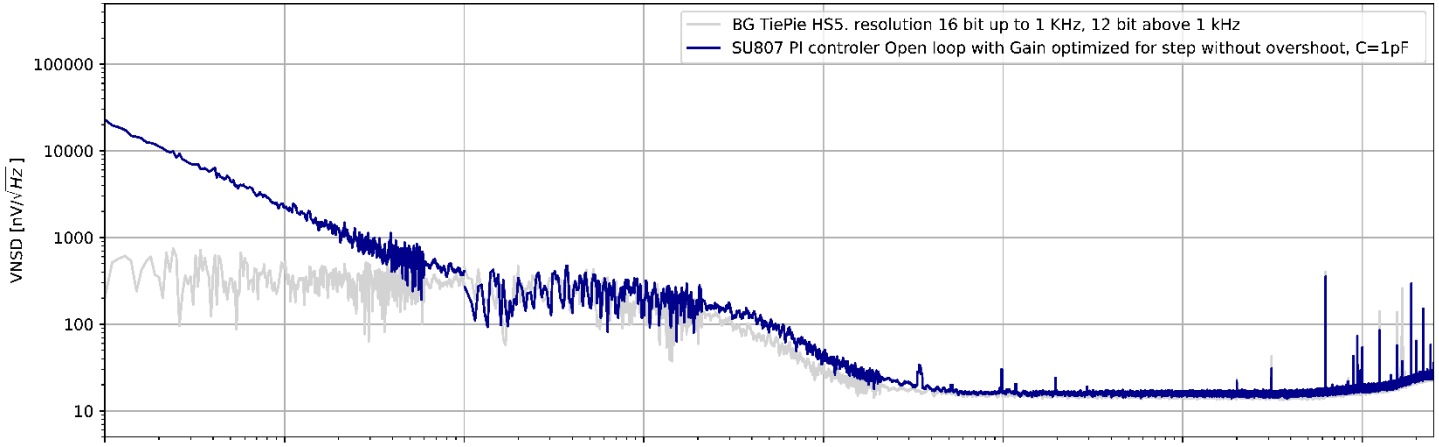

C_I=100pF
closed loop

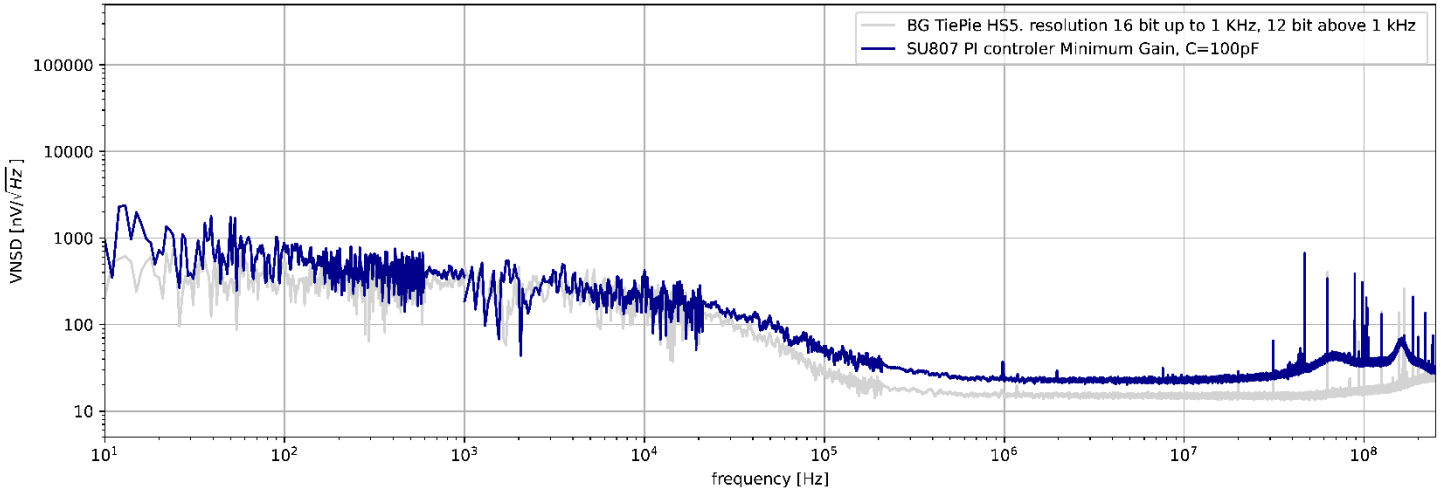

SU807 Notes production

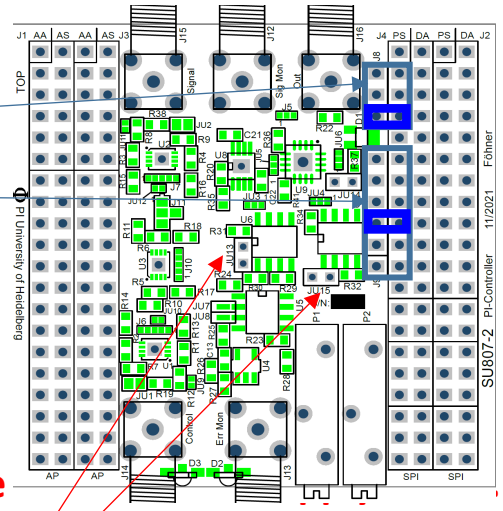

- **Place 3x2 and 6x2 douple-Pin-row**
- Check for the latest production version and check for additional notes on the workshop server
- Add Polarity Protection: Pin 39: Top: Block pin with solder. Bottom: Cut pin
- **Cut Pins of SMA connenctor on bottom side such that they don‘t touch the TO220 linear regulators of the**
  If non-contacting can‘t be garantueed, put insulating tape ontop of the pins.
- **Use through-hole sockets put through the PCB for replacable capacitors and resistors (JU13 and JU 15)**
- **Set standard jumper settings**
- Put PCBs into Aluminium case. Drawings of the cases can be found here:
  [\\pi2\microcontroller\QD-Ultracold\Q-El - e-lego\Cases and Heatsink](\\pi2\microcontroller\QD-Ultracold\Q-El - e-lego\Cases and Heatsink) Needed: **Case BNC or other case**
  If another case is needed , put new drawing into the folder for the drawings
- Label the finished boxes with the Part-number SU807
- **<u>Label the outputs (Sig., Sig.Mon., out, Cont., Err.Mon.)</u>**
- Add some notes to the workshop server if there has been some modifications to the previous production version
- If not available yet, make pictures of the produced component and put them on the workshop server
- If not available yet, leave one module in the e-workshop Muster box and label it with „Muster E-Werkstatt“

e-lego module

SU810 Instrumentation Amplifier

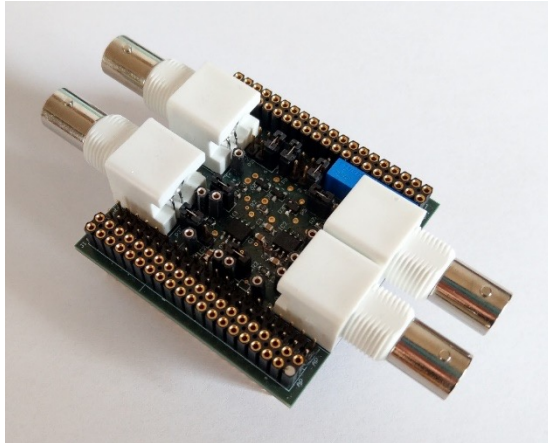

SU810 Instrumentation Amplifier

Standard Jumper with Gain 100

Widerstände R1,R4 und R6 können durch Kondesatoren ersetzt werden, um einen reinen AC-Anteil zu erhalten.

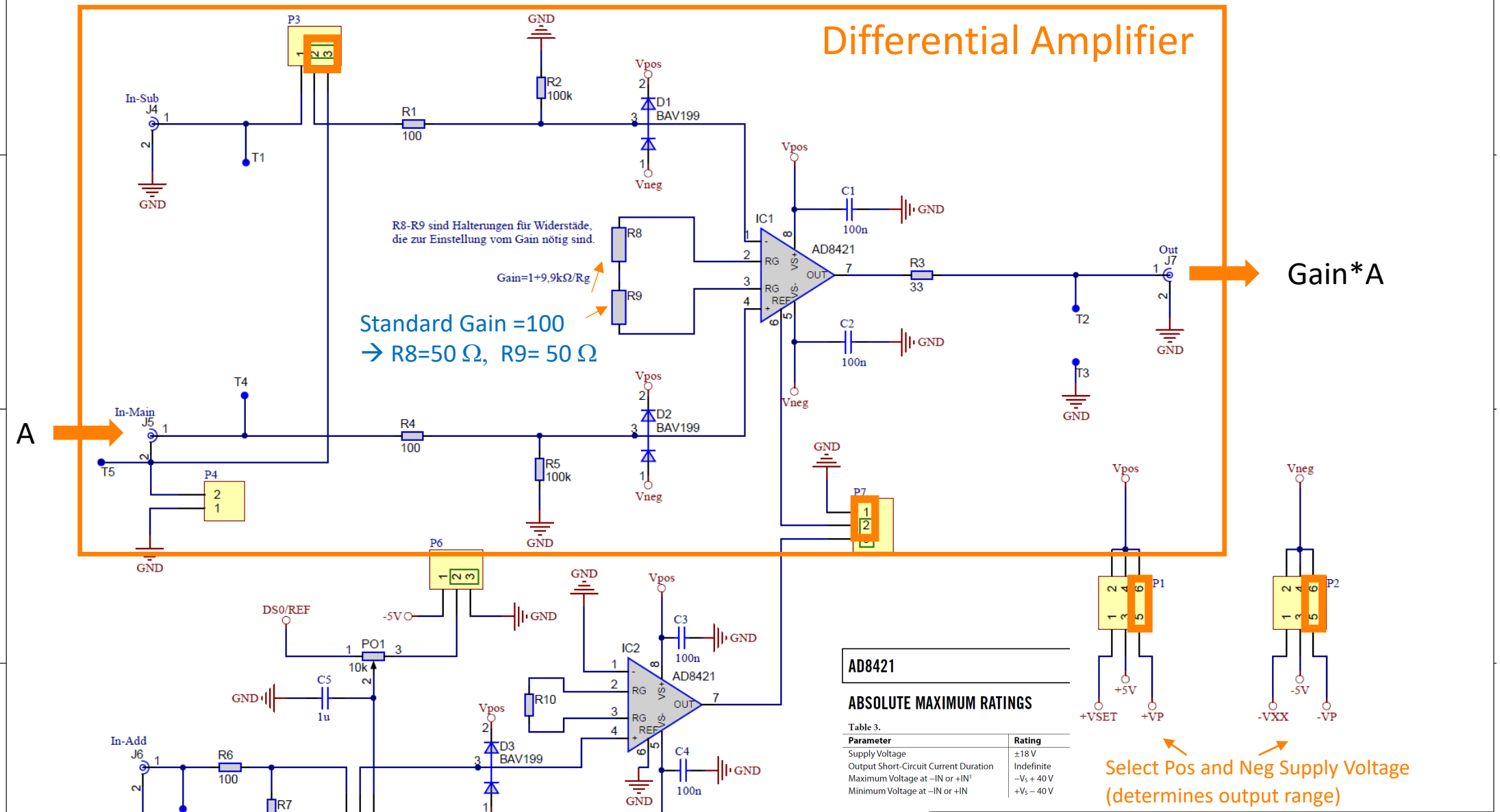

AD8421

ABSOLUTE MAXIMUM RATINGS

Table 3.

Parameter	Rating
Supply Voltage	±18 V
Output Short-Circuit Current Duration	Indefinite
Maximum Voltage at –IN or +IN[1]	$-V_S + 40$ V
Minimum Voltage at –IN or +IN	$+V_S - 40$ V

Title: Instrumentation Amplifier		
Type: SU810	Version: 2	Name: Sven Ferrat
Date: 11.03.2020	Size: A4	Sheet: 2 of 2
File: SU810 Instrumentation Amplifier.SchDoc		

Physikalisches Institut Heidelberg

Differential Amplifier

Standard Jumper with Standard Gain 100

Set gain Via R8 and R9 (in series, i.e. Rg = R8 +R9)

Gain=1+9.9kΩ/Rg

Gain=1 if R8 and R9 not set

Standard Gain =100
→ R8=50 Ω, R9= 50 Ω

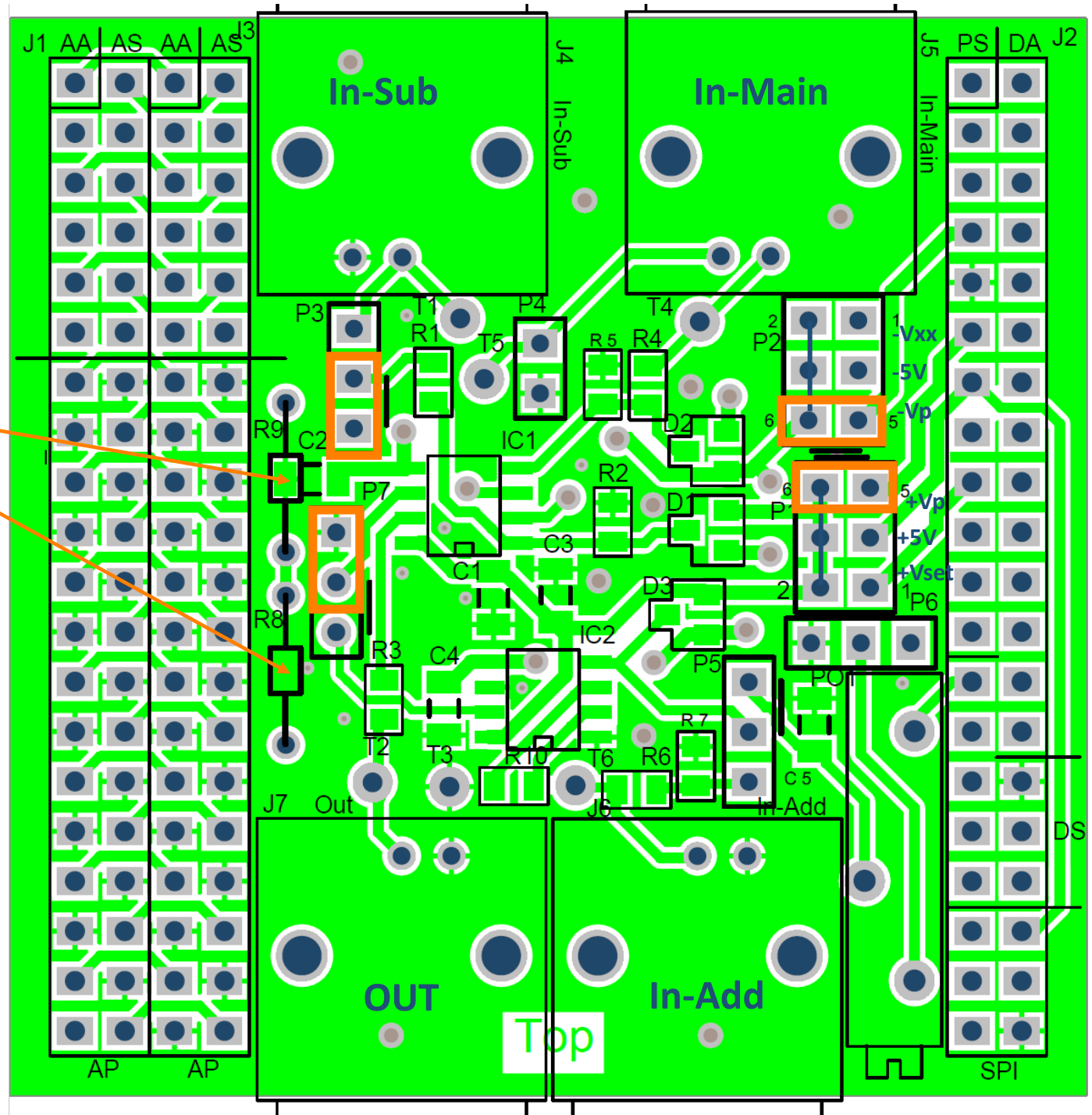

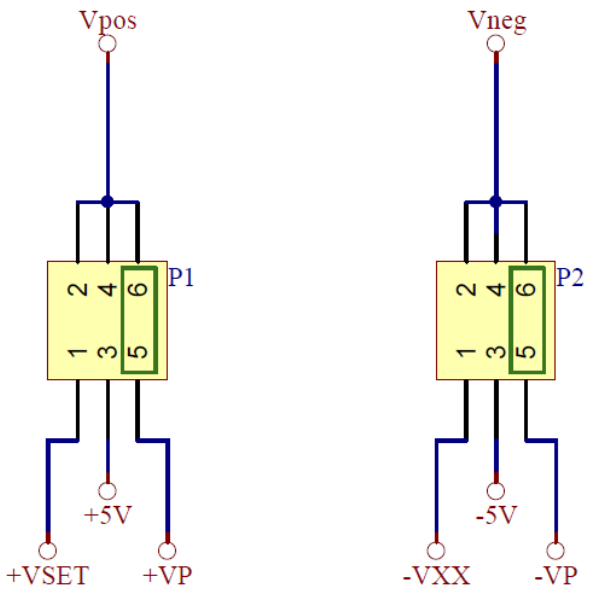

SU810 Differential Amplifier – Bode Plot

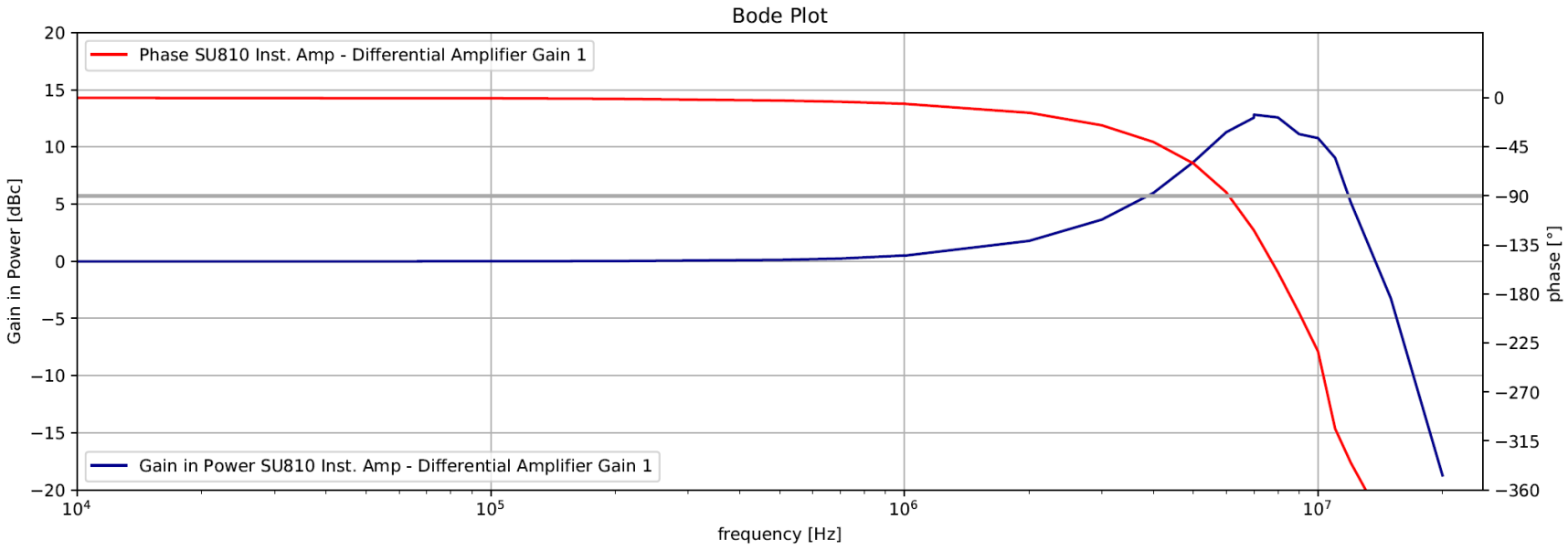

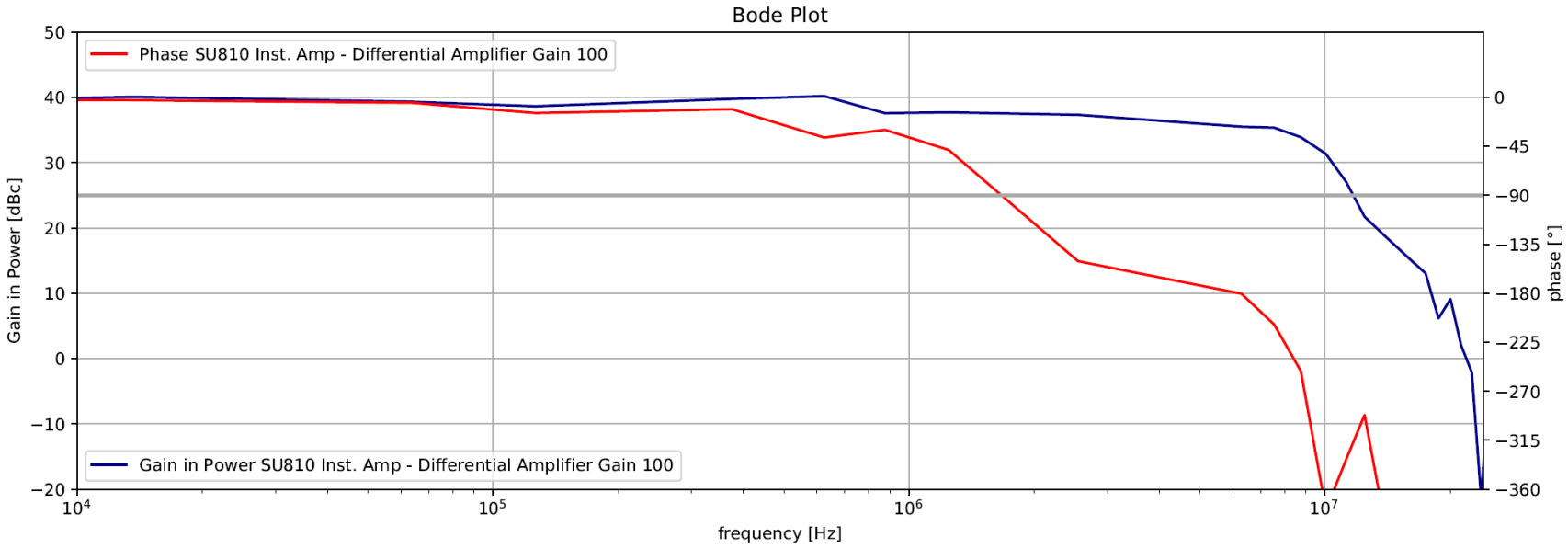

From Datasheet AD8421
Voltage Gain

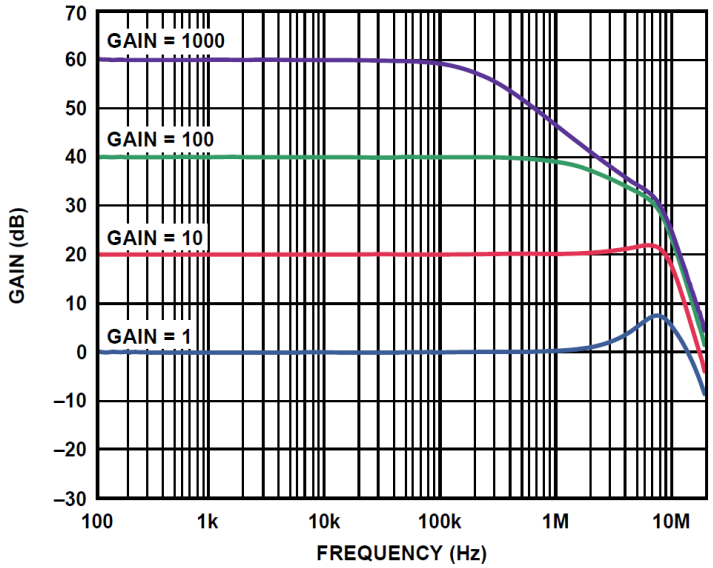

Figure 21. Gain vs. Frequency

SU810 Differential Amplifier – PSD and Sensitivity

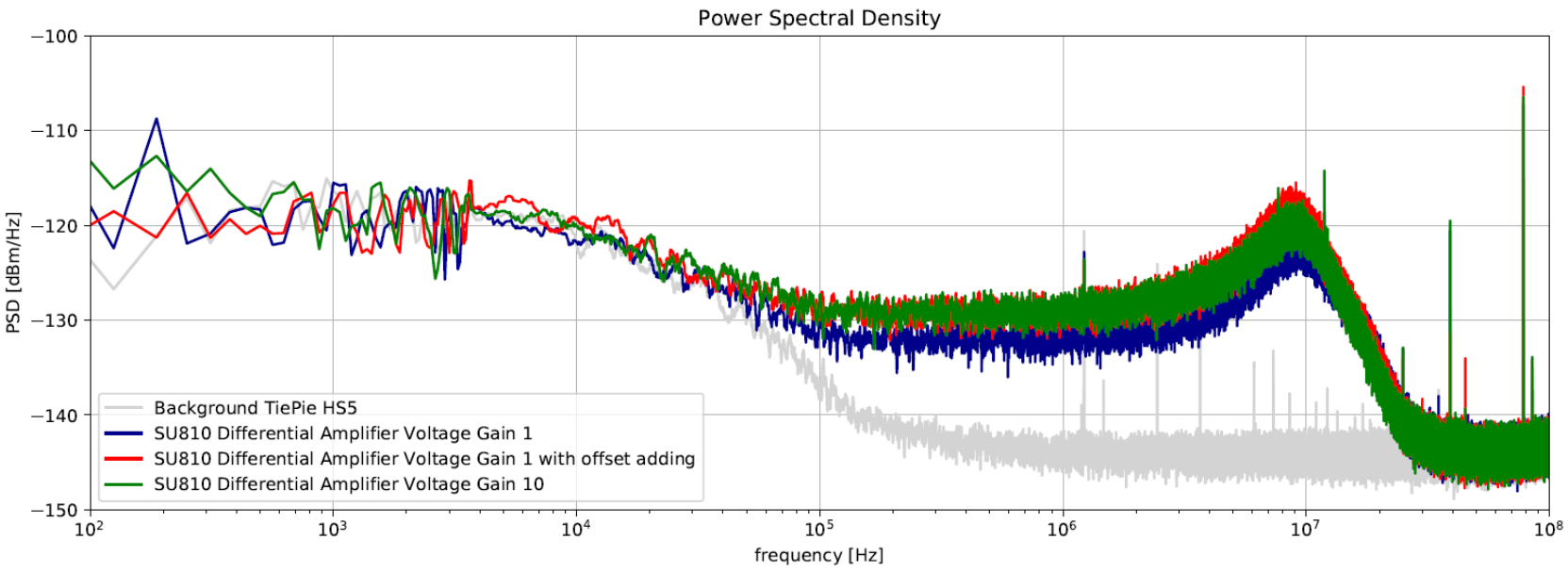

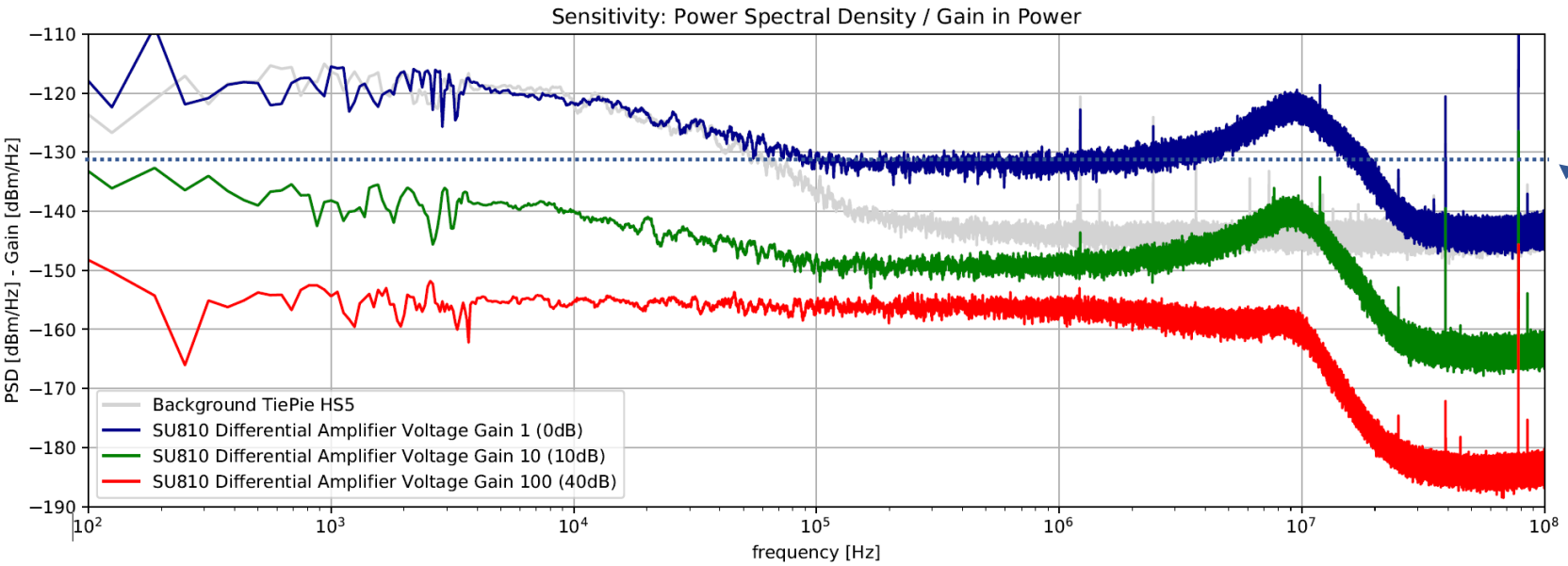

Noise spectral density (NSD) to PSD conversion:

PSD= NSD^2/50 Ω
PSD [dBm/Hz]=10 log(NSD[V/sqrt[Hz]]^2/50 * 1e3)
NSD [V/sqrt[Hz]]=(1e-3*50*10^(1/10*PSD[dBm/Hz]))^(1/2)

Instrumentation Amplifier AD8421

((60nV/sqrt(Hz))^2/50Ω*1000mW/W =-131dBm/Hz
10*log((60e-9)^2/50*1000) =-131

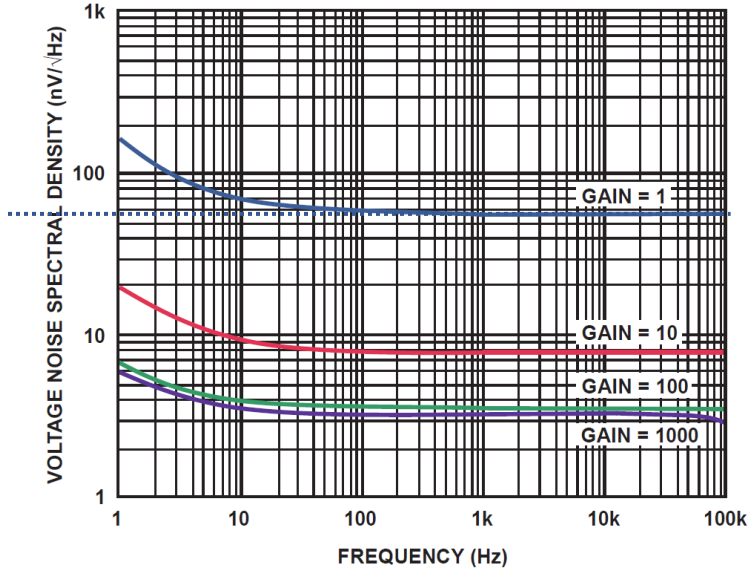

Figure 41. RTI Voltage Noise Spectral Density vs. Frequency

Gain 100 can be used to improve sensitivity of TiePie for small signal amplitudes (30dB up to 10kHz, 20dB up to 100 kHz, 10 dB up to 10 MHz)

SU810 Differential Amplifier – input voltage noise spectral density

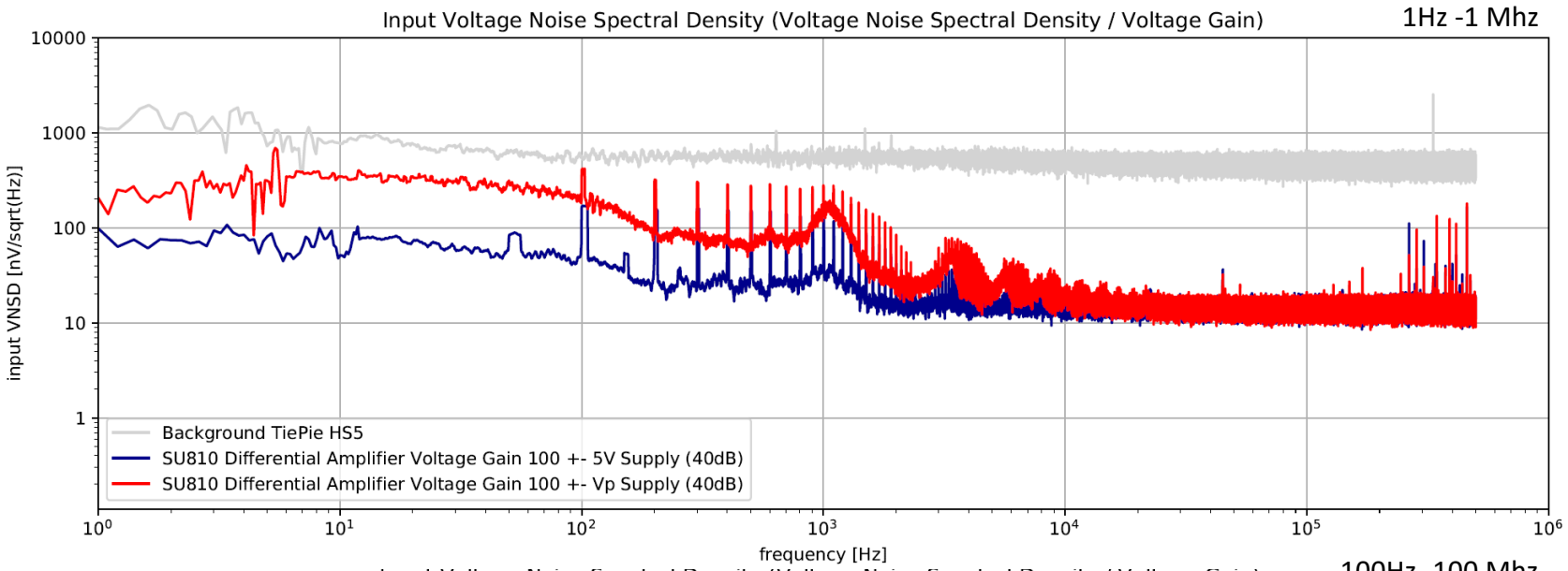

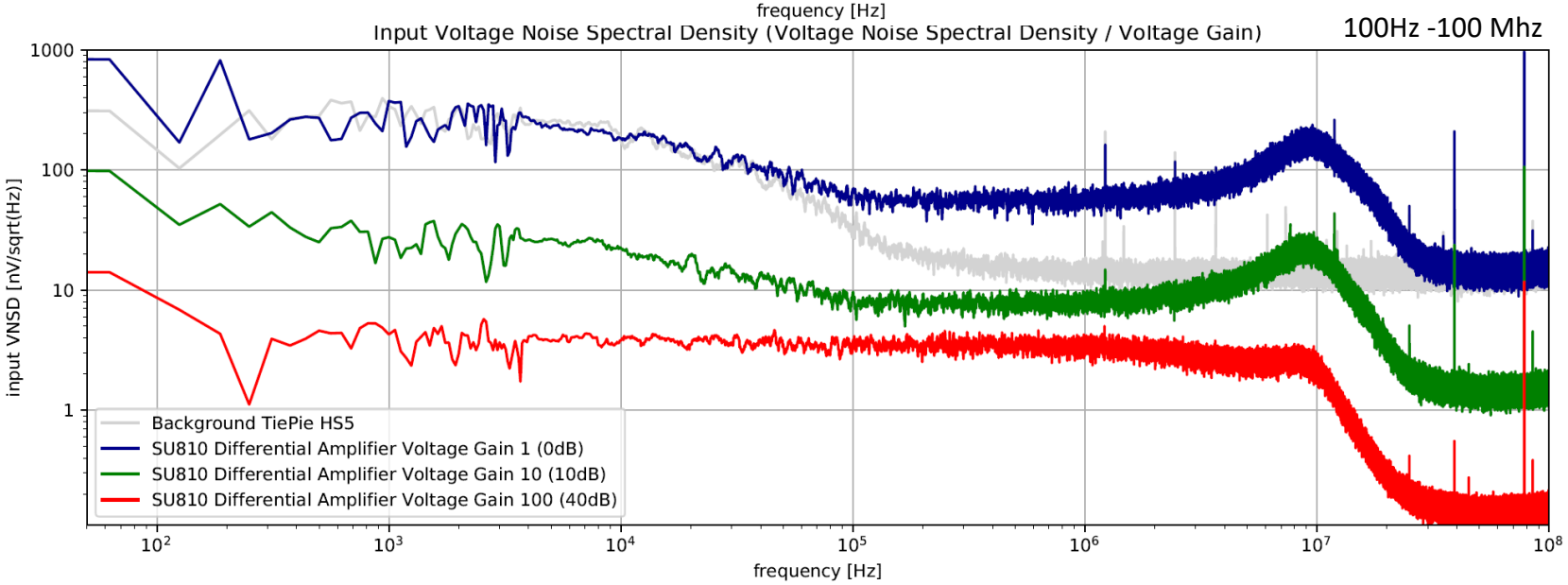

Instrumentation Amplifier AD8421

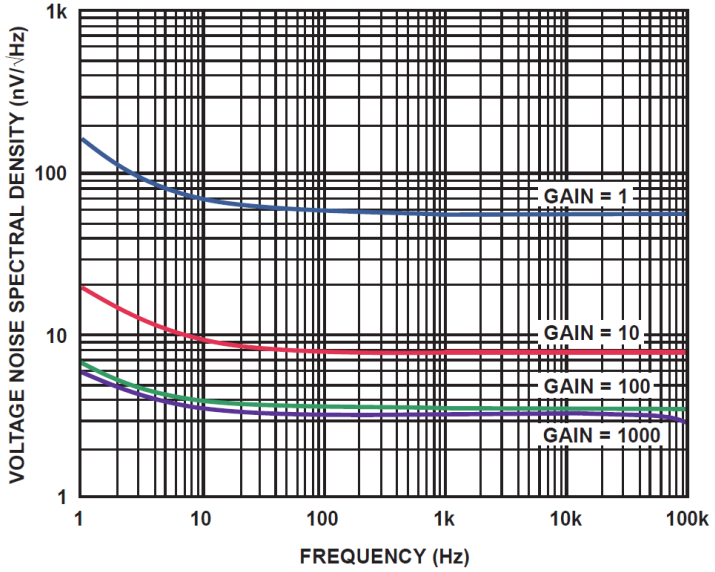

Figure 41. RTI Voltage Noise Spectral Density vs. Frequency

Gain 100 can be used to improve sensitivity of TiePie for small signal amplitudes (30dB up to 10kHz, 20dB up to 100 kHz, 10 dB up to 10 MHz)

SU810 Instrumentation Amplifier

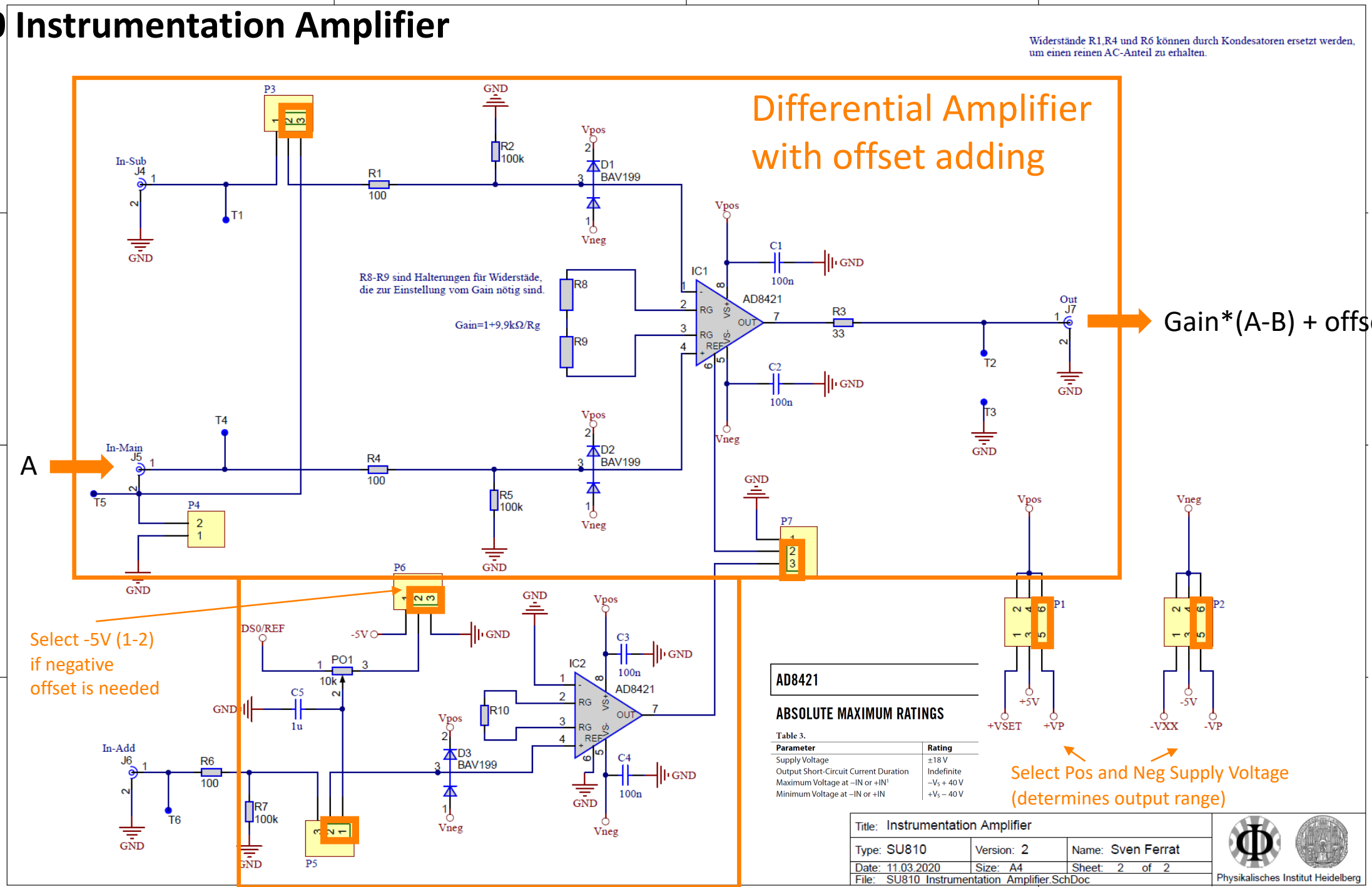

Differential Amplifier with offset adding

Set gain
Via R8 and R9
(in series,
i.e. Rg = R8 +R9)

Gain=1+9.9kΩ/Rg

(Gain=1 if R8 and R9 not set)

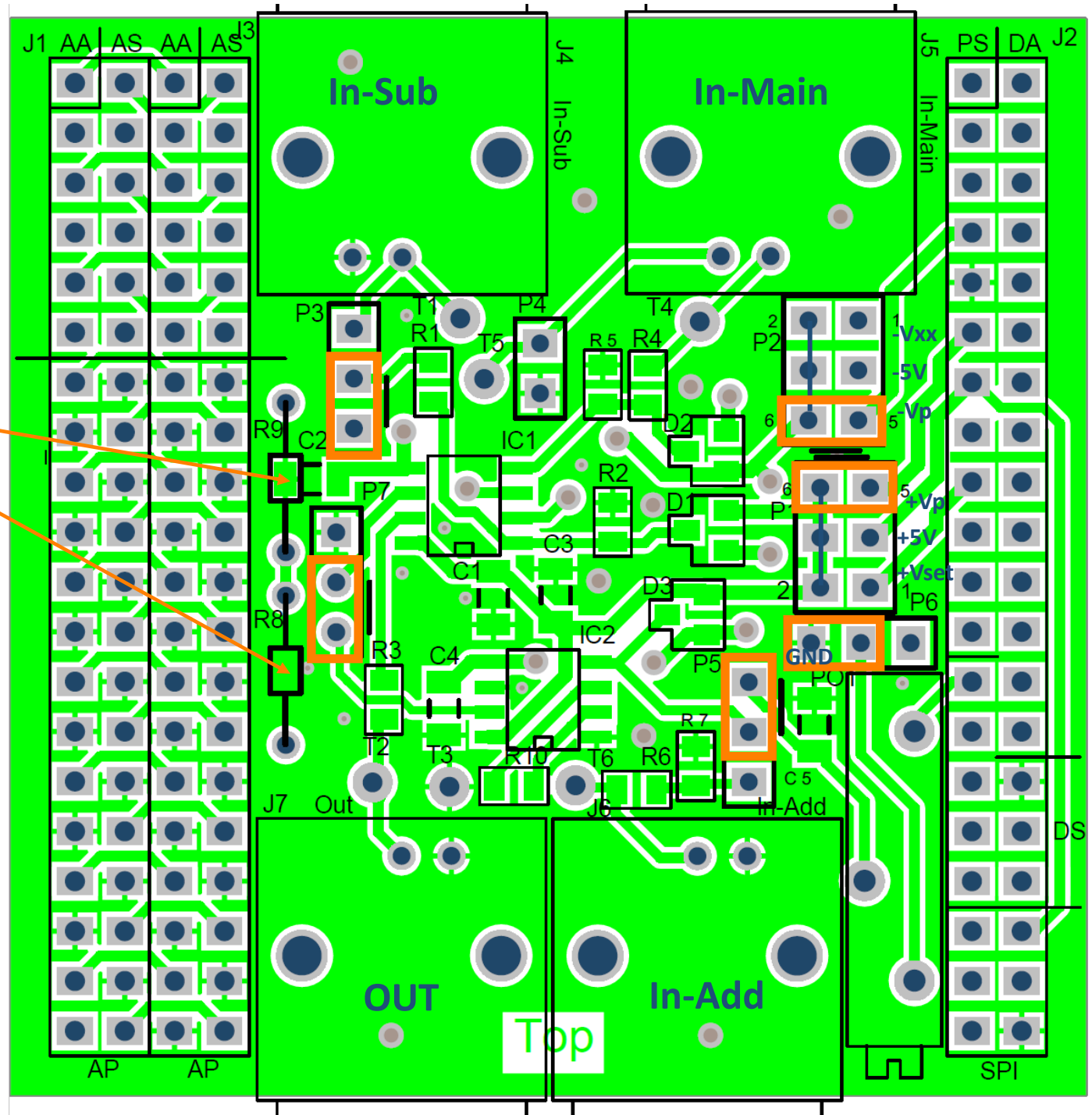

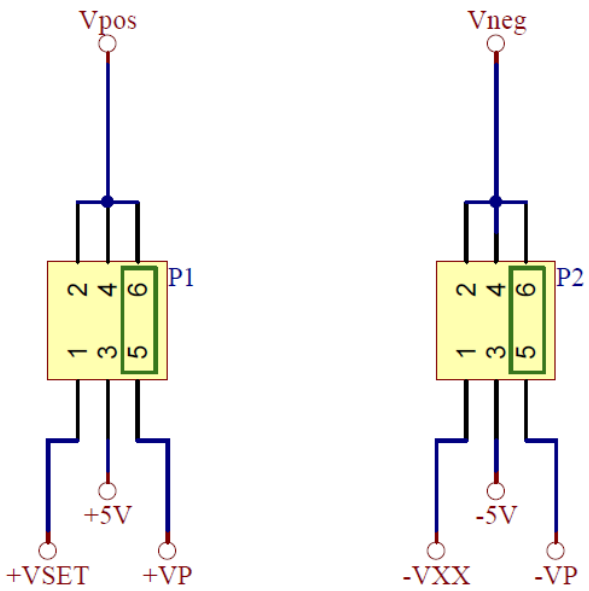

SU810 Instrumentation Amplifier

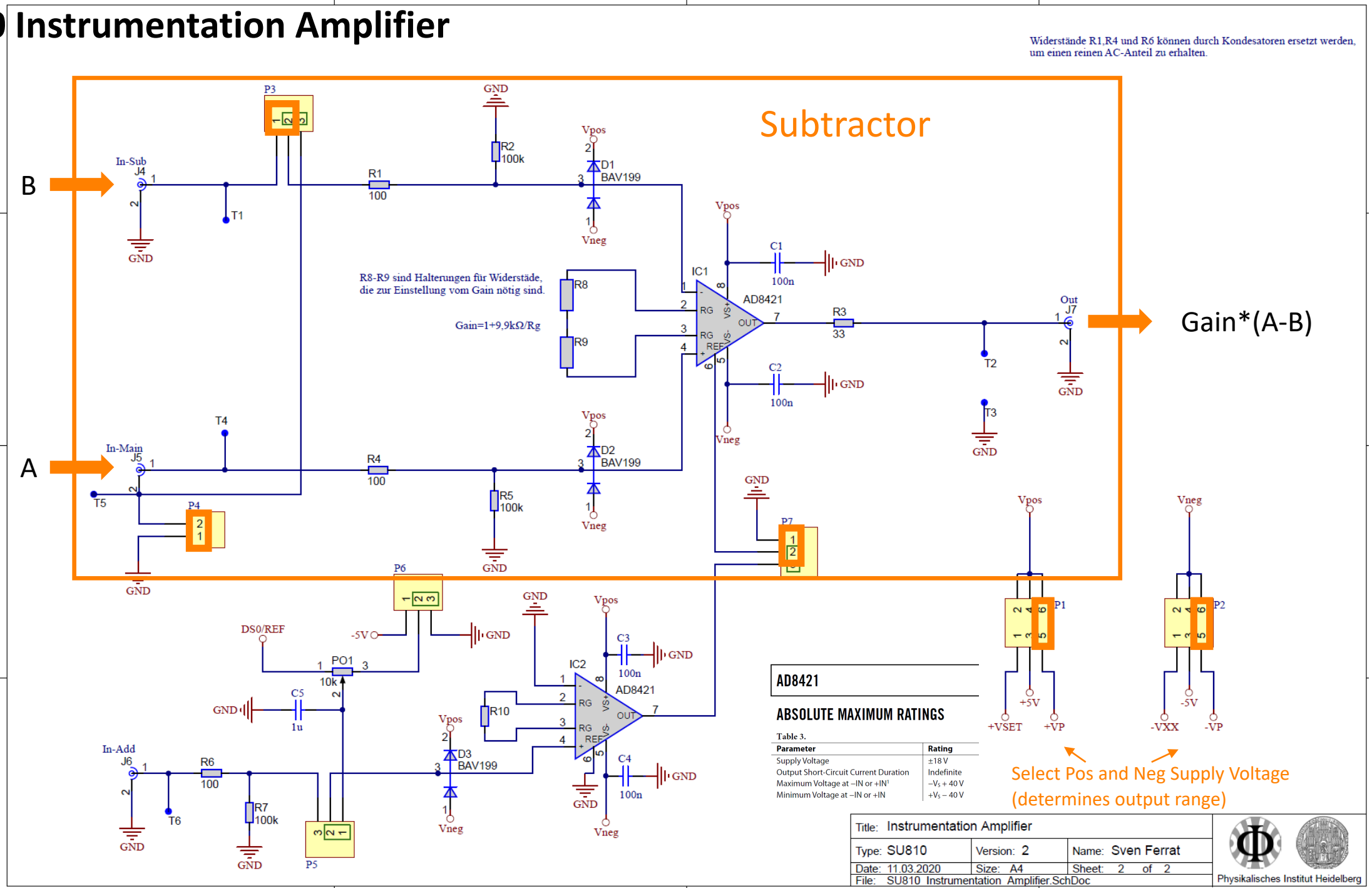

Subtractor

Set gain
Via R8 and R9
(in series,
i.e. Rg = R8 +R9)

Gain=1+9.9kΩ/Rg

(Gain=1 if R8 and R9 not set)

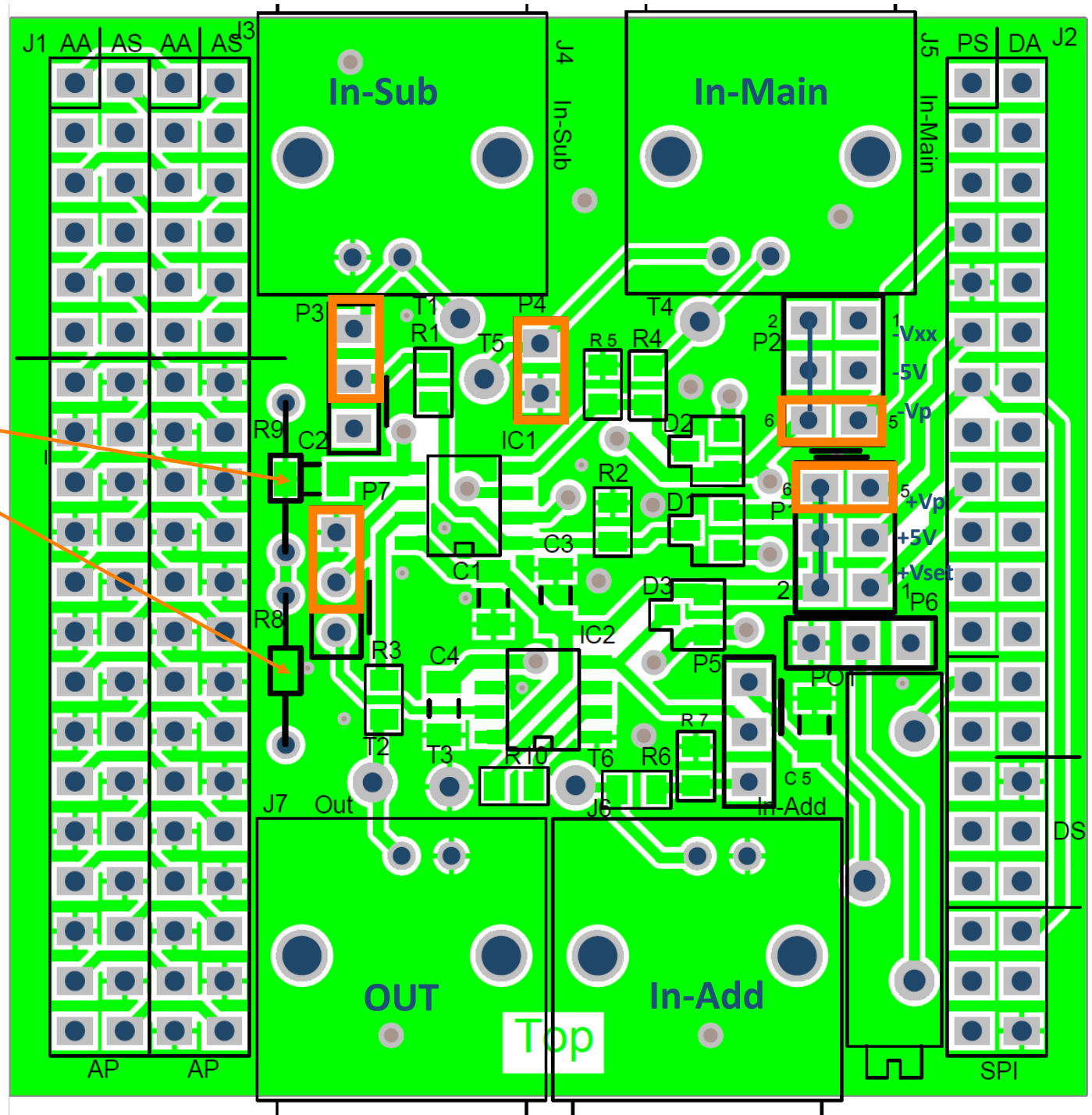

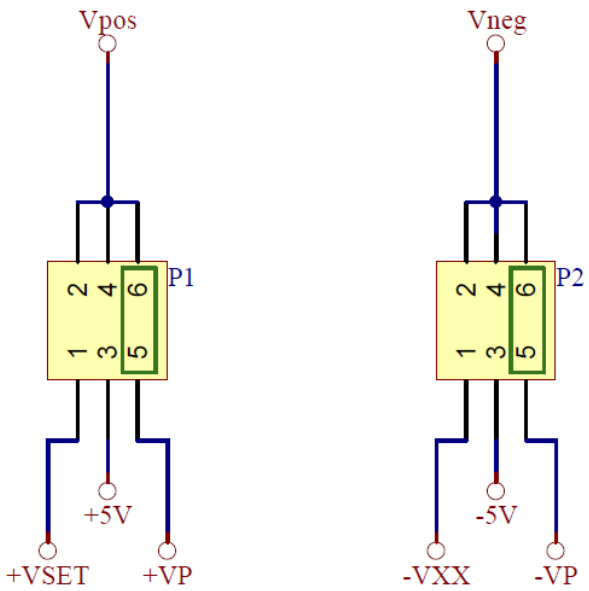

SU810 Instrumentation Amplifier

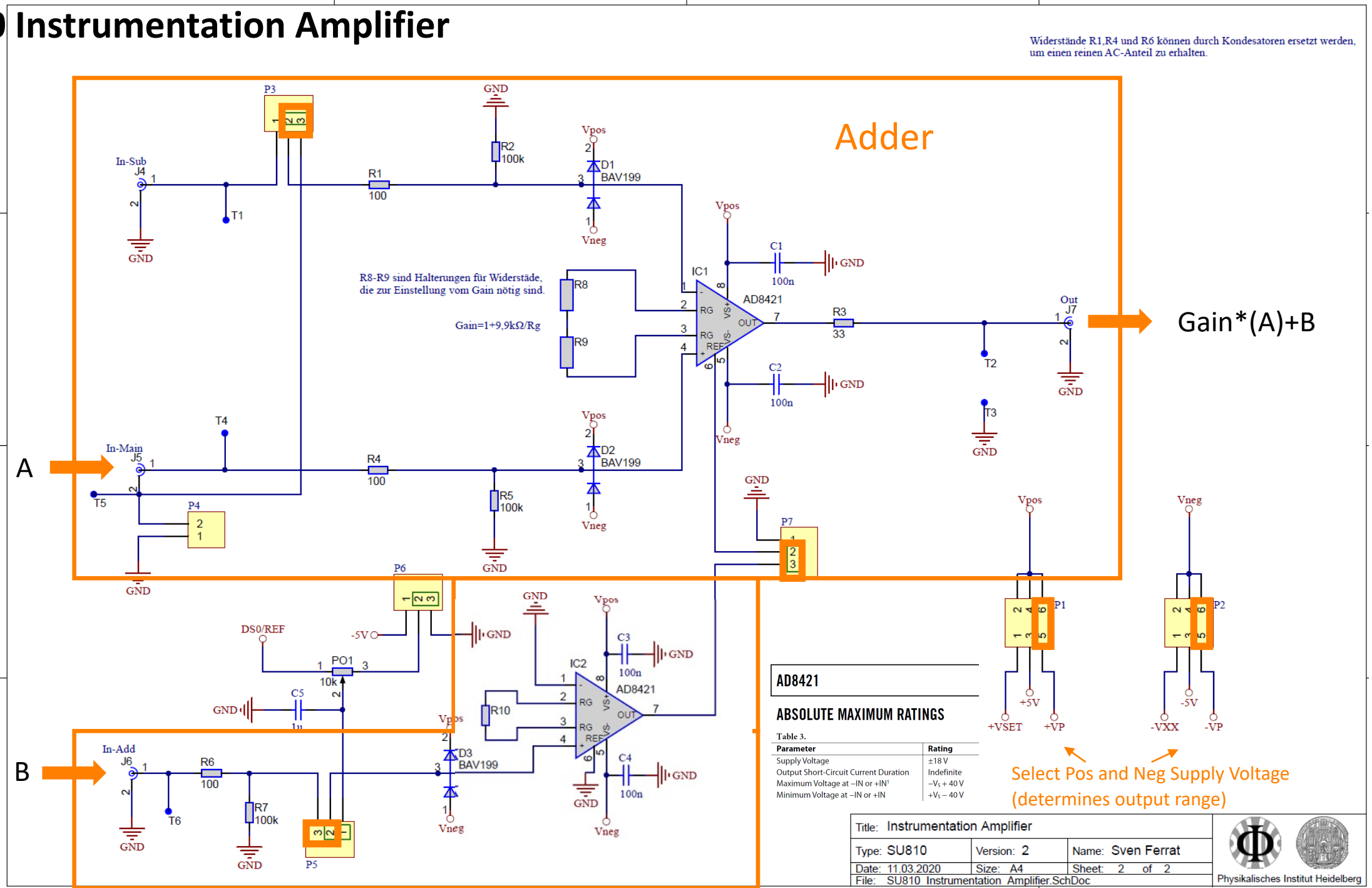

Differential Amplifier with offset drimming

Set gain
Via R8 and R9
(in series,
i.e. Rg = R8 +R9)

Gain=1+9.9kΩ/Rg

(Gain=1 if R8 and R9 not set)

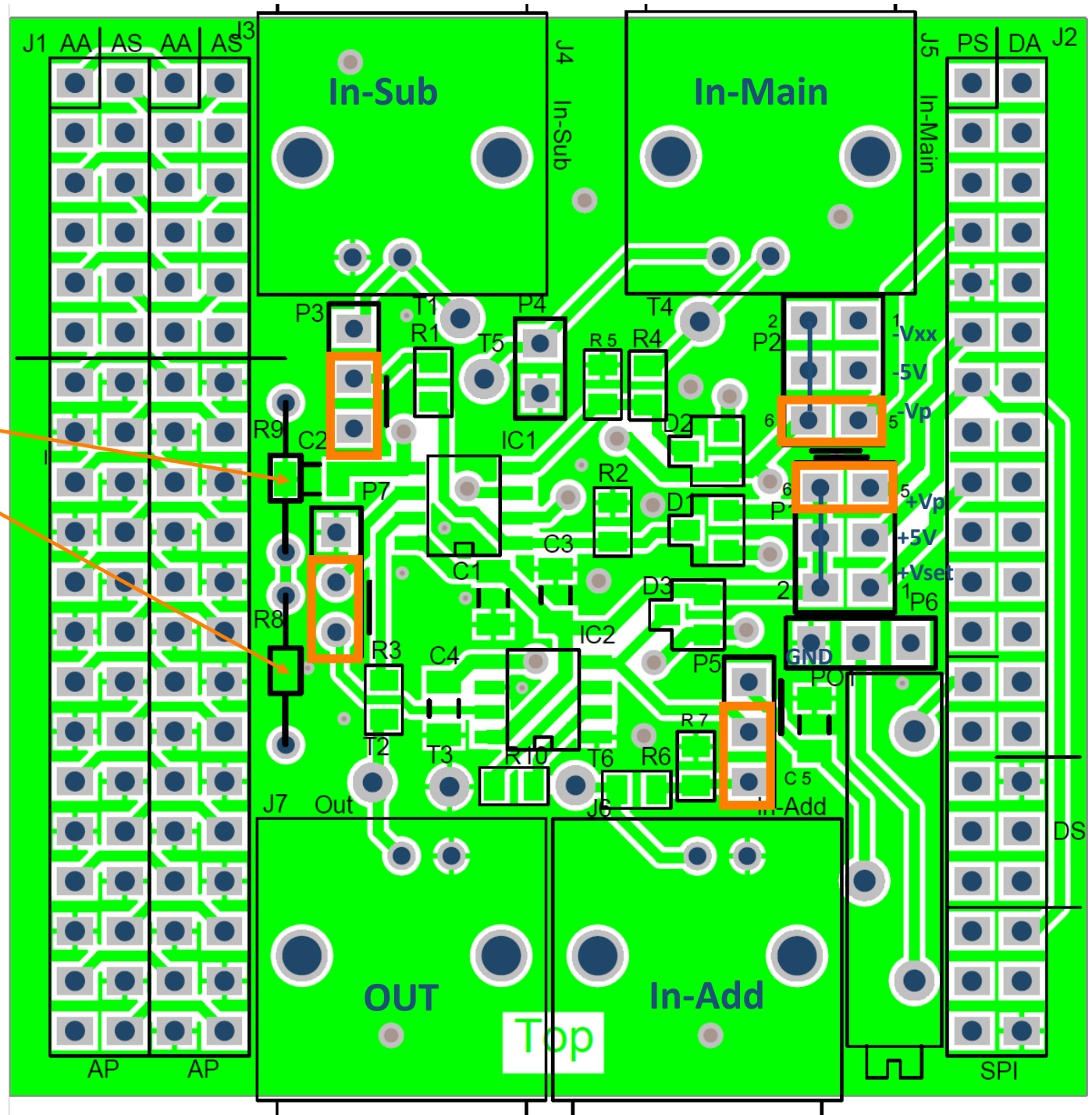

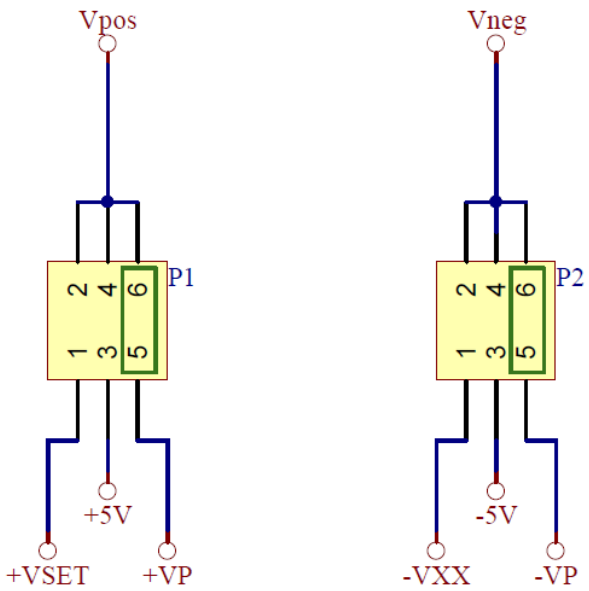

SU810 Instrumentation Amplifier

Large signal step response with Gain=1

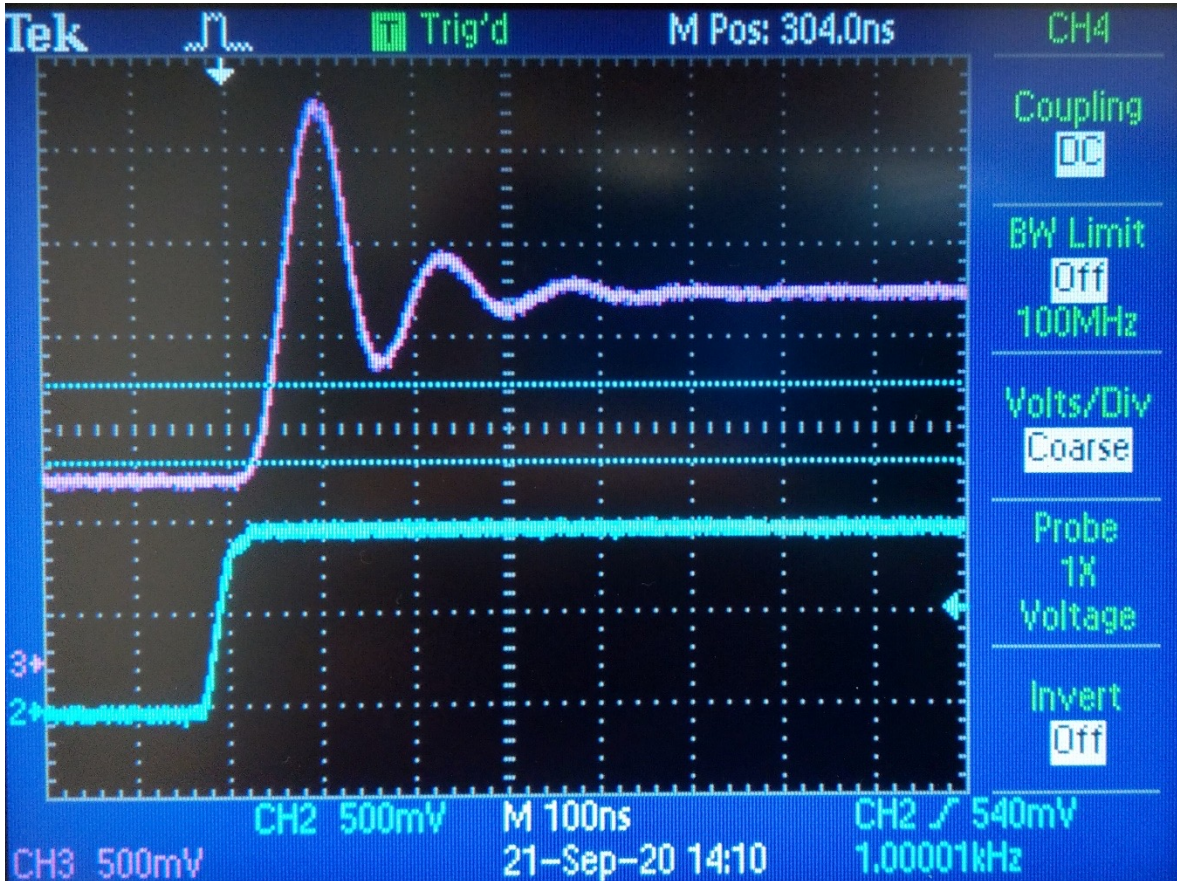

Blue: input
Pink: output

SU810 Notes production

- Check for the latest production version and check for additional notes on the workshop server

- Add Polarity Protection: Pin 39: Top: Block pin with solder. Bottom: Cut pin

- **Set standard jumper settings (inclusiv: Set 2 x 50 Ohm resistors in gain resistor banks (Gain 100))**

- Put PCBs into Aluminium case. Drawings of the cases can be found here:
  \\pi2\microcontroller\QD-Ultracold\Q-El - e-lego\Cases and Heatsink Needed: **Case SU810**

- Label the finished boxes with the Part-number SU810
- **Label the inputs and outputs (In-Sub, In-Main, In-Add, OUT)**

- Add some notes to the workshop server if there has been some modifications to the previous production version

- If not available yet, make pictures of the produced component an put them on the workshop server

e-lego module

SU809: Optocoupler MOSFET driver

app: Opto coupled TTL, Switching high currents

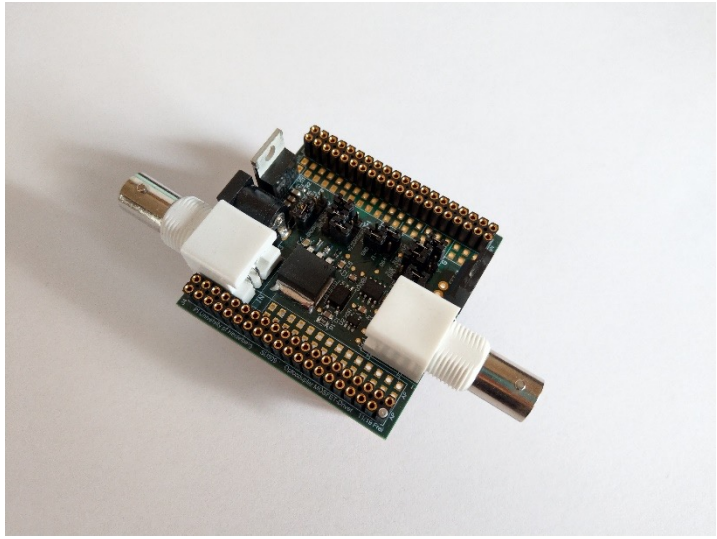

Opto coupled TTL input with inverter, FET driver and FET. Each component selectable with jumpers.

Delay: 100 ns
Risetime: 10 ns (10%-90%)
Jitter: <1ns

Opto: TLP2367
Fet-Driver: MCP14E9
FET: IRLIZ44

Supply Voltage: 15V

MICROCHIP **MCP14E9/10/11**

3.0A Dual High-Speed Power MOSFET Driver With Enable

DC CHARACTERISTICS(2)

Electrical Specifications: Unless otherwise indicated, T_A = +25°C, with 4.5V ≤ V_{DD} ≤ 18V.

Parameters	Sym	Min	Typ	Max	Units	Conditions
Input						
Logic '1', High Input Voltage	V_{IH}	2.4	1.5	—	V	
Logic '0', Low Input Voltage	V_{IL}	—	1.3	0.8	V	
Input Current	I_{IN}	-1	—	1	µA	0V ≤ V_{IN} ≤ V_{DD}
Input Voltage	V_{IN}	-5	—	V_{DD} + 0.3	V	
Output						
High Output Voltage	V_{OH}	V_{DD} – 0.025	—	—	V	DC Test
Low Output Voltage	V_{OL}	—	—	0.025	V	DC Test
Output Resistance, High	R_{OH}	—	4	7	Ω	I_{OUT} = 10 mA, V_{DD} = 18V
Output Resistance, Low	R_{OL}	—	4	7	Ω	I_{OUT} = 10 mA, V_{DD} = 18V
Peak Output Current	I_{PK}	—	3	—	A	V_{DD} = 18V(2)
Switching Time(1)						
Rise Time	t_R	—	14	30	ns	Figure 4-1, Figure 4-2, C_L = 1800 pF
Fall Time	t_F	—	17	30	ns	Figure 4-1, Figure 4-2, C_L = 1800 pF
Propagation Delay Time	t_{D1}	—	45	55	ns	Figure 4-1, Figure 4-2
Propagation Delay Time	t_{D2}	—	45	55	ns	Figure 4-1, Figure 4-2

Options

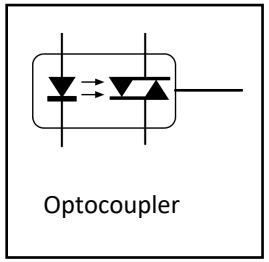

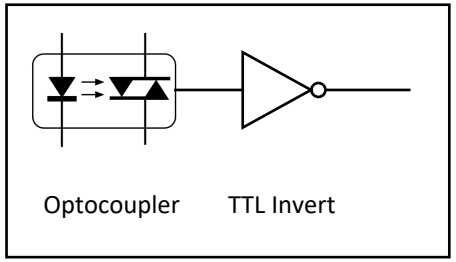

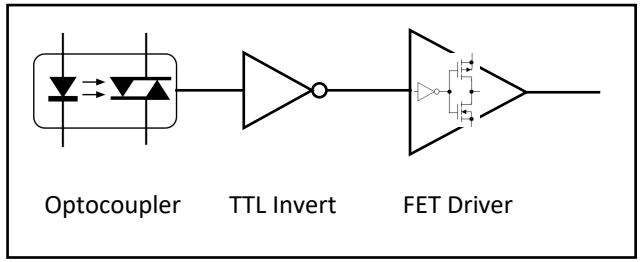

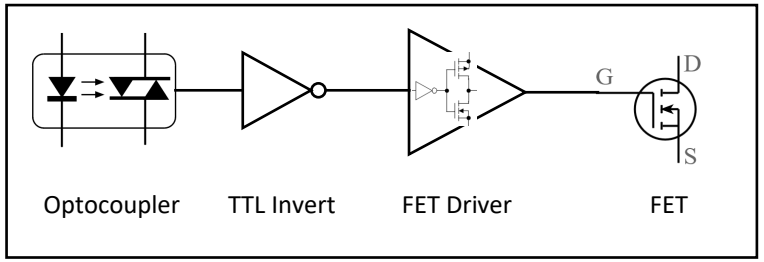

SU809: Optocoupler MOSFET driver

In → Optocoupler → TTL Invert/Non-invert → FET driver → FET → Out

JU3 1-2: non-invert, 2-3: invert

JU10 Driver Supply Voltage
1-2: 5V, 2-3: 12V

JU5 Possitive output select
1-2: 12 V, 2-3: Driver or TTL out

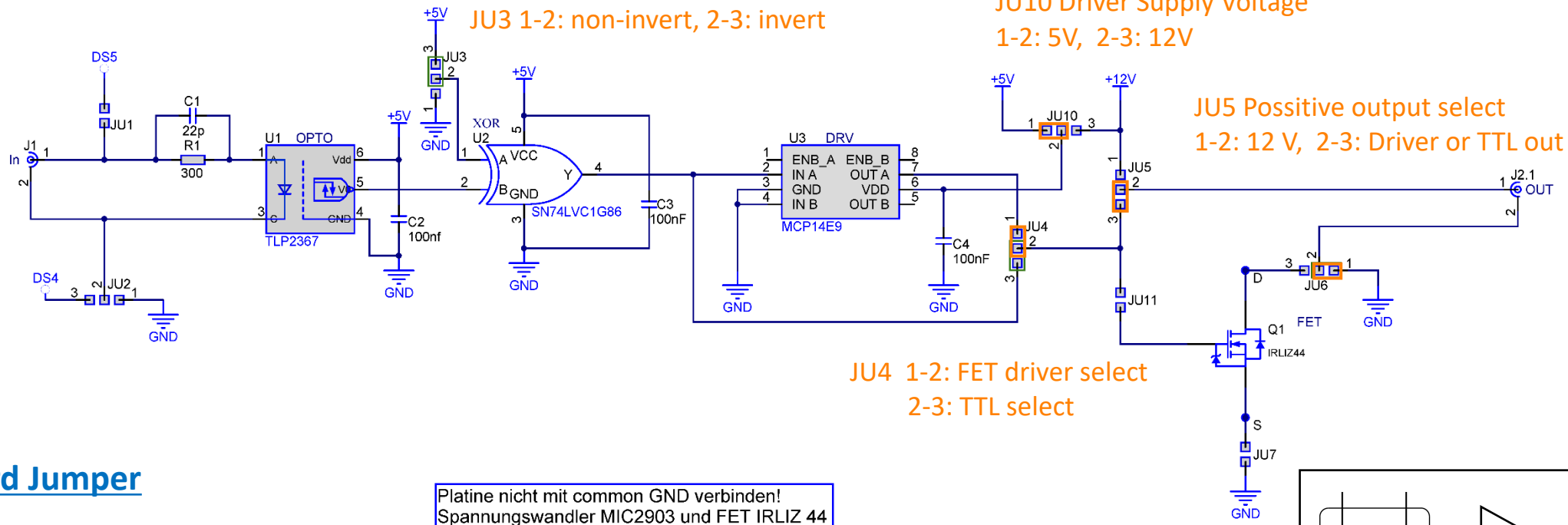

JU4 1-2: FET driver select
2-3: TTL select

Standard Jumper

Platine nicht mit common GND verbinden!
Spannungswandler MIC2903 und FET IRLIZ 44
Isoliert mit Gehäuse verbinden.
Über Jumper JU12, JU13 und JU14 kann die
Isolation aufgehoben werden.

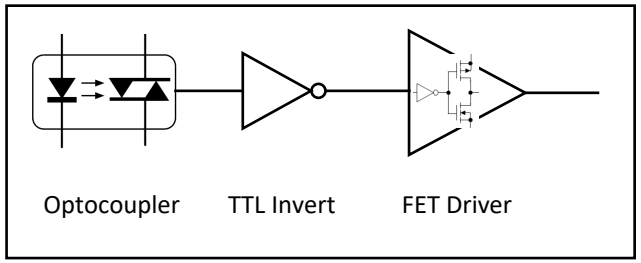

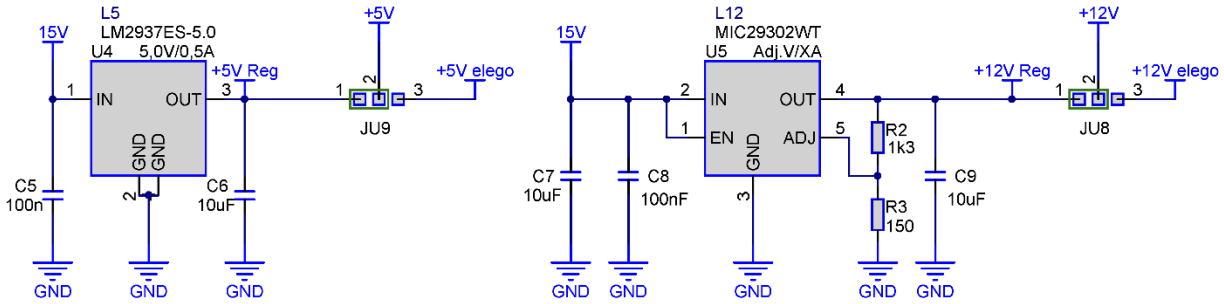

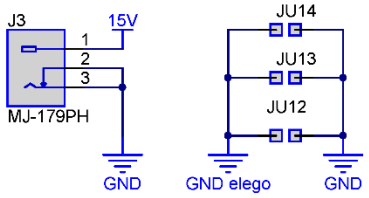

R2=R3*(V_OUT/1.240-1)

Title: Optokoppler MOSFET-Treiber		
Type: SU809	Version: 1	Name: Paul Frei
Date: 27.02.2020	Size: A4	Sheet: 2 of 2
File: SCH Optocoupler MOSFET-Driver Schaltung .SchDoc		

Physikalisches Institut Heidelberg

SU809: Optocoupler MOSFET driver

Jumper Settings

Standard Jumper

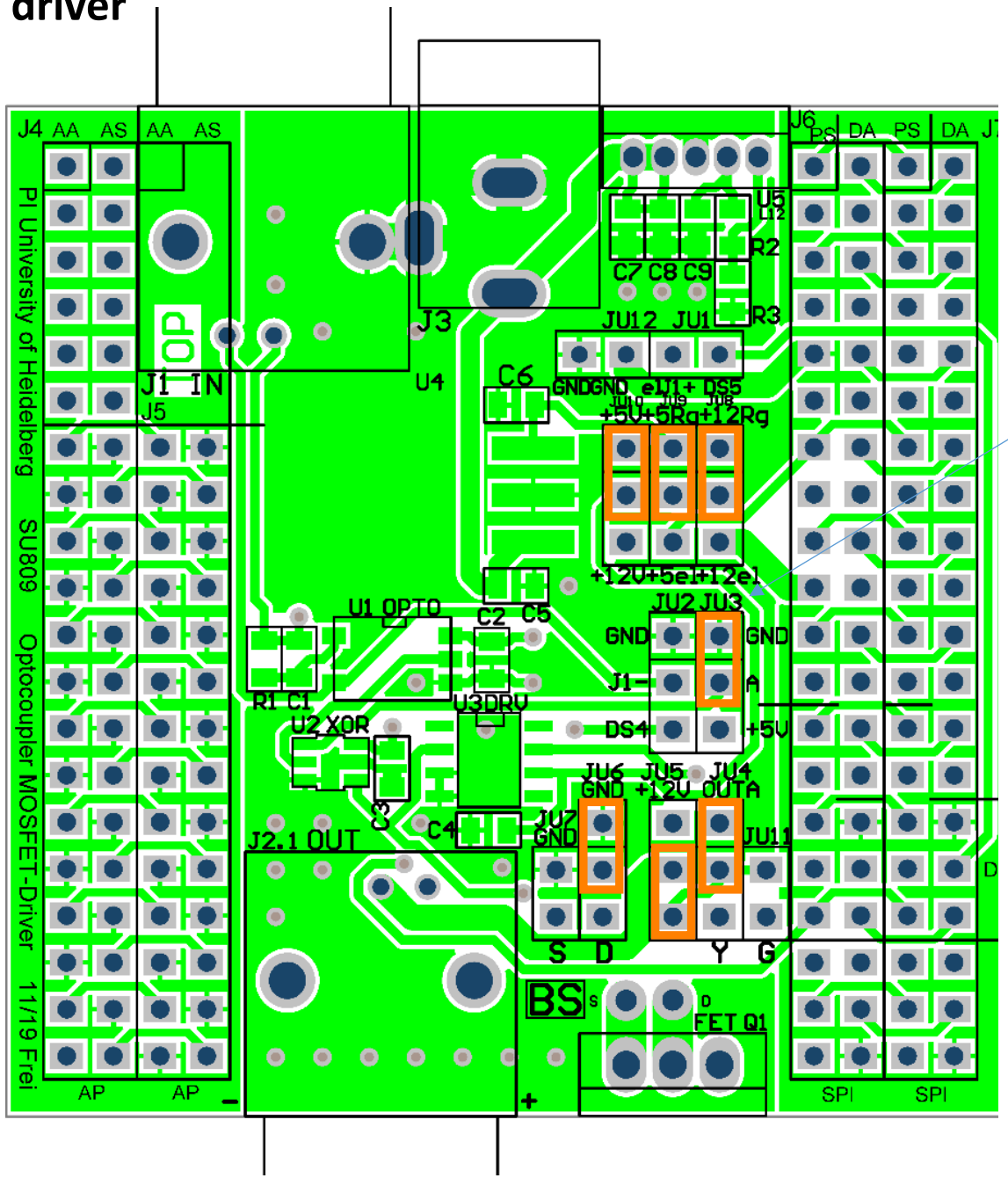

JU3:
Change from invert ←→ to non-invert

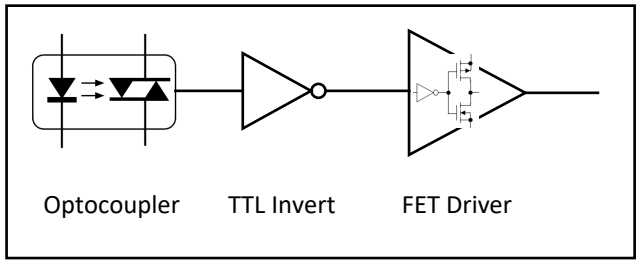

SU809: Optocoupler MOSFET - Switching Speed

0V/5V In →Opto→TTL→**Driver→ 0V/5V to 50 Ω**

Rising Edge:

Delay: 90 ns
Risetime: 11 ns (10%-90%)
Jitter: <1ns

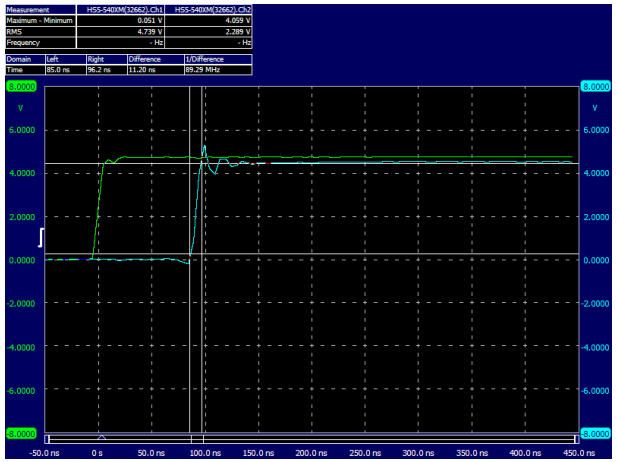

Falling Edge:

Delay: 95 ns
Fallingtime: 11 ns (10%-90%)
Jitter: <1ns

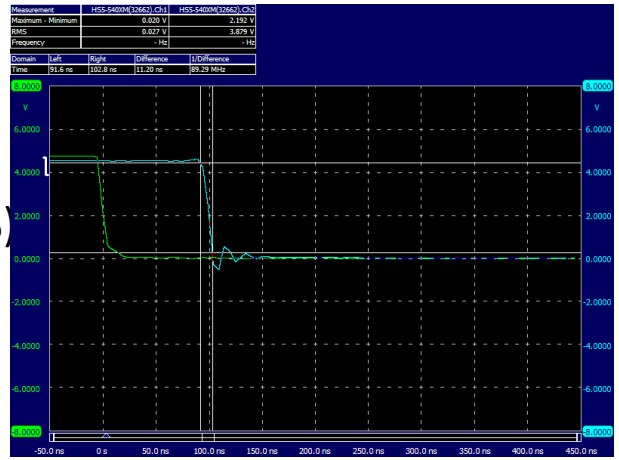

0V/5V In →Opto→TTL→**Driver→ 0V/12V to 50 Ω**

Rising Edge:

Delay: 63ns
Risetime: 7ns (10%-90%)
Jitter: <1ns

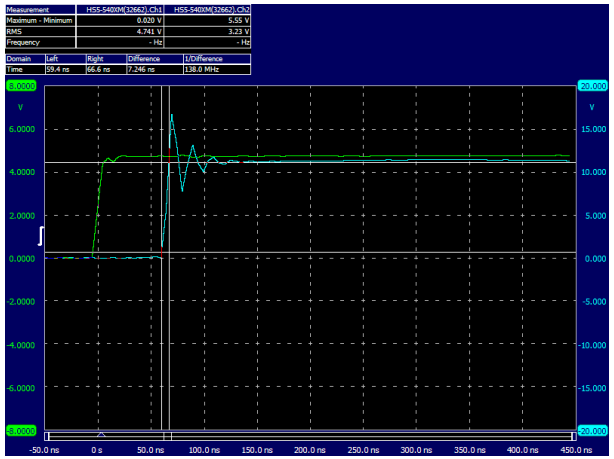

Falling Edge:

Delay: 60 ns
Fallingtime: 7 ns (10%-90%)
Jitter: <1ns

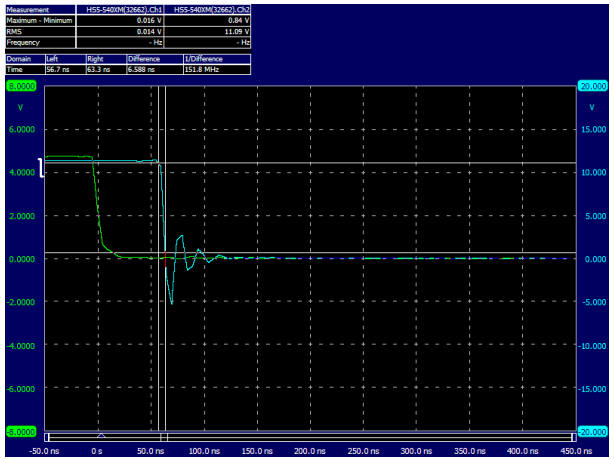

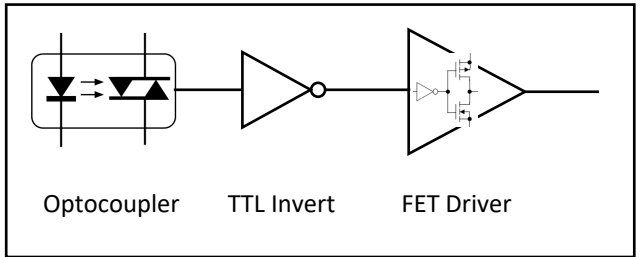

SU809: Optocoupler MOSFET driver

In → Optocoupler → TTL Invert/Non-invert → FET driver → FET → Out

JU3 1-2: non-invert, 2-3: invert

JU10 Driver Supply Voltage
1-2: 5V, 2-3: 12V

JU5 Possitive output select
1-2: 12 V, 2-3: Driver or TTL out

JU4 1-2: FET driver select
2-3: TTL select

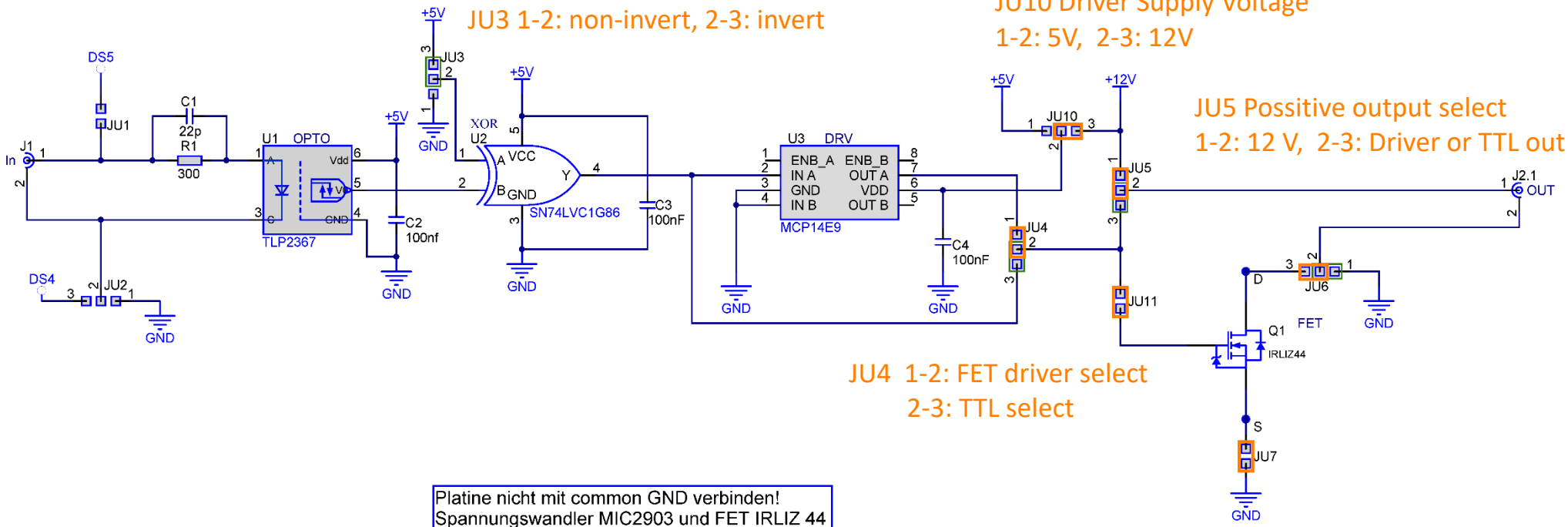

Platine nicht mit common GND verbinden!
Spannungswandler MIC2903 und FET IRLIZ 44
Isoliert mit Gehäuse verbinden.
Über Jumper JU12, JU13 und JU14 kann die
Isolation aufgehoben werden.

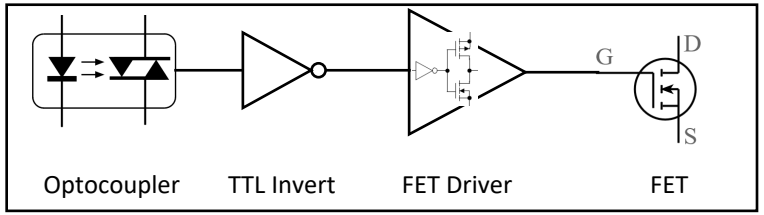

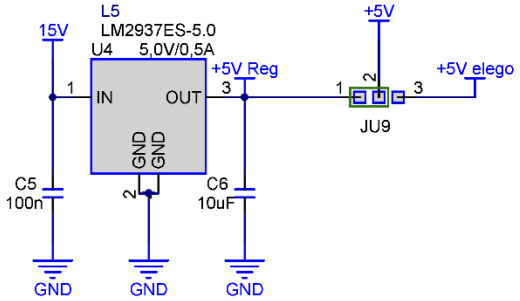

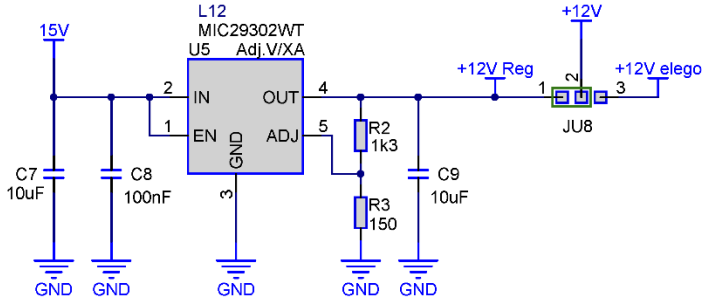

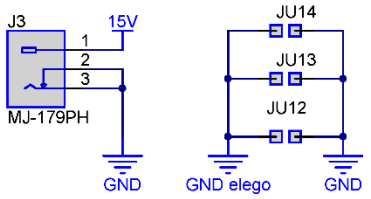

R2=R3*(V_OUT/1.240-1)

Title: Optokoppler MOSFET-Treiber		
Type: SU809	Version: 1	Name: Paul Frei
Date: 27.02.2020	Size: A4	Sheet: 2 of 2
File: SCH Optocoupler MOSFET-Driver Schaltung .SchDoc		

Physikalisches Institut Heidelberg

SU809: Optocoupler MOSFET driver

Jumper Settings

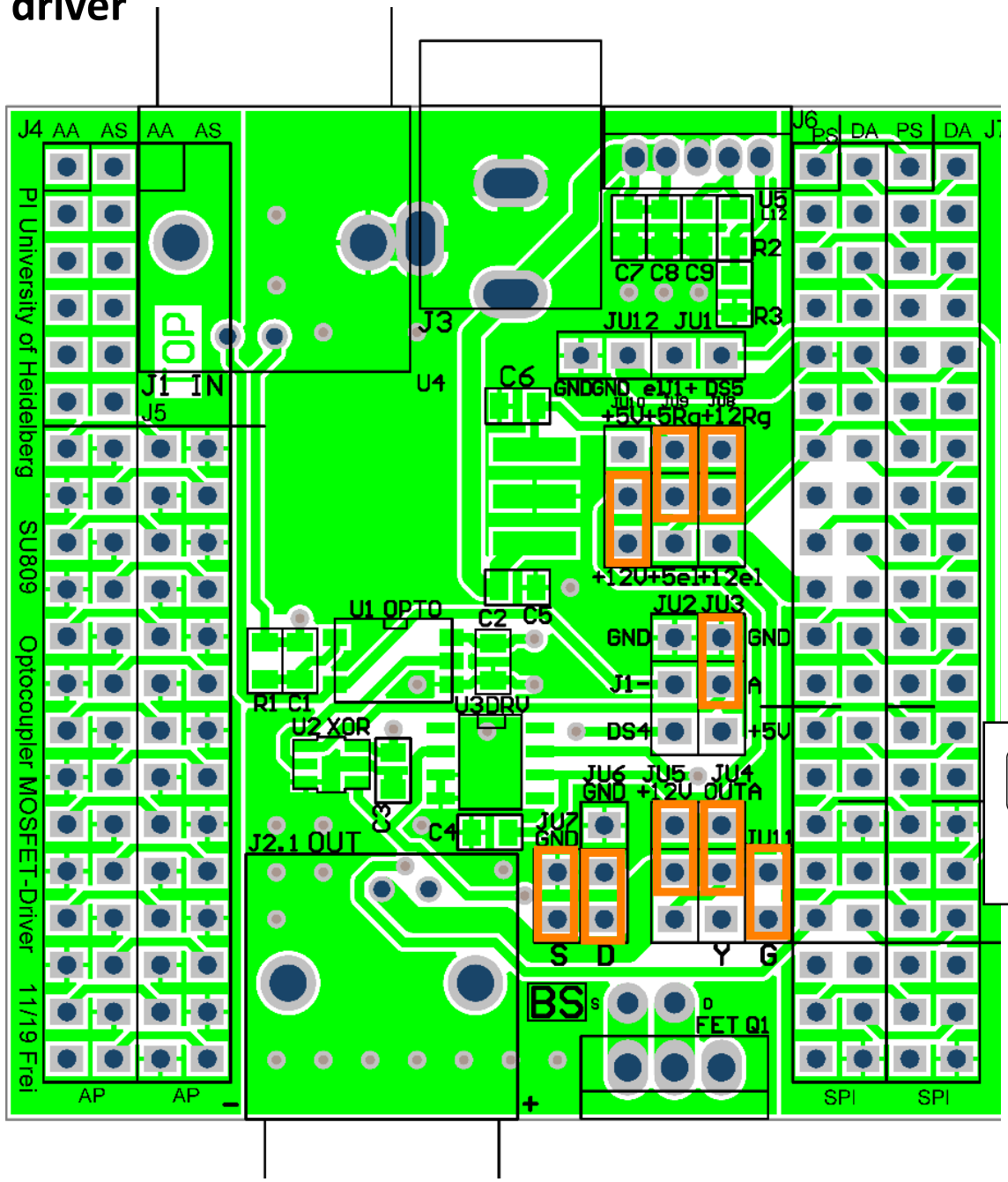

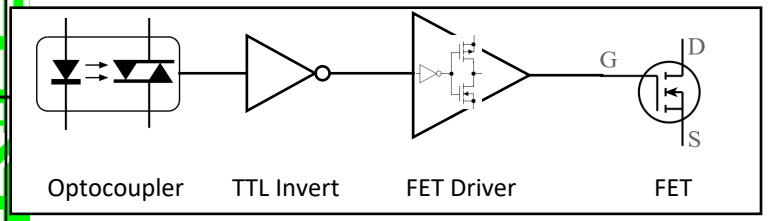

SU809: Optocoupler MOSFET - Switching Speed

0V/5V In →Opto→TTL→Driver→**Fet→ GND-FET-50Ω-12V**

Measurement of Voltage above 50Ω

Rising Edge:

Delay: 65ns
Risetime: 3ns (10%-90%)
Jitter: <1ns

Falling Edge:

Delay: 200 ns
Fallingtime: 137 ns (10%-90%)
Jitter: <1ns

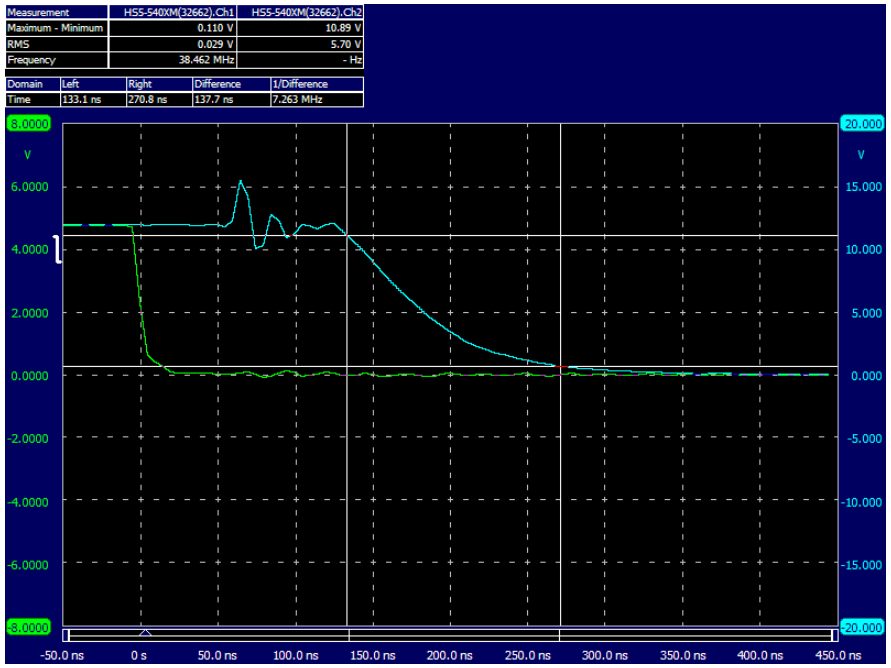

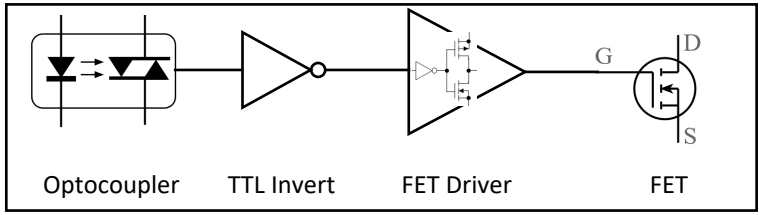

Modifikation:

- SU809 Lötstopplack auf via zwischen Source und Drain des FETs zu den Pads entfernen (TOP und Bottom)

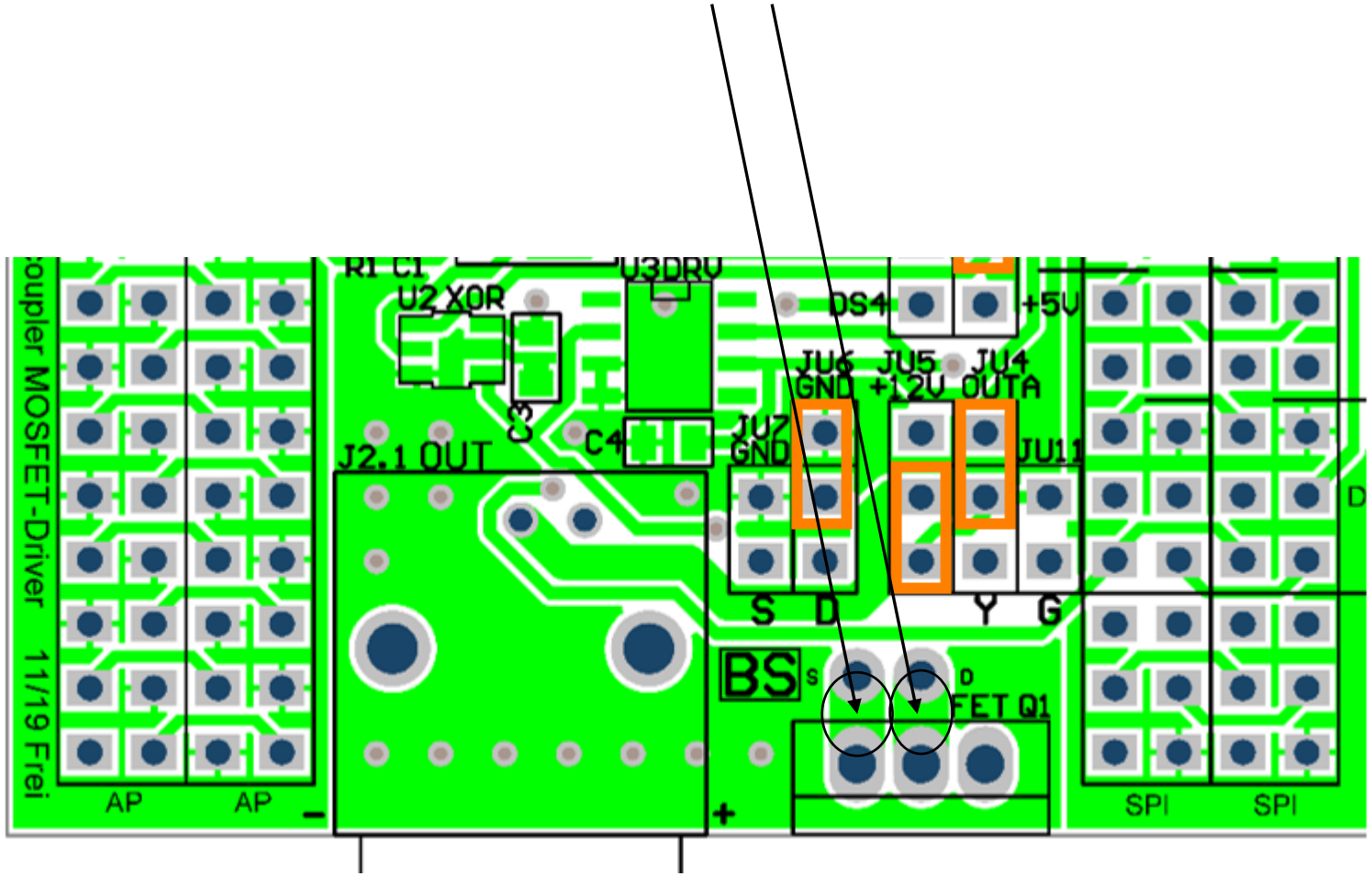

SU809 Notes production

- Check for the latest production version and check for additional notes on the workshop server

- Add Polarity Protection: Pin 39: Top: Block pin with solder. Bottom: Cut pin

- **Set standard jumper settings**

- Put PCBs into Aluminium case. Drawings of the cases can be found here:
  \\pi2\microcontroller\QD-Ultracold\Q-El - e-lego\Cases and Heatsink Needed: **Case SU809**

- Label the finished boxes with the Part-number SU809
- **Label the inputs and outputs (IN, OUT)**

- Add some notes to the workshop server if there has been some modifications to the previous production version

- If not available yet, make pictures of the produced component an put them on the workshop server

e-lego module

SU811 Solid state relais

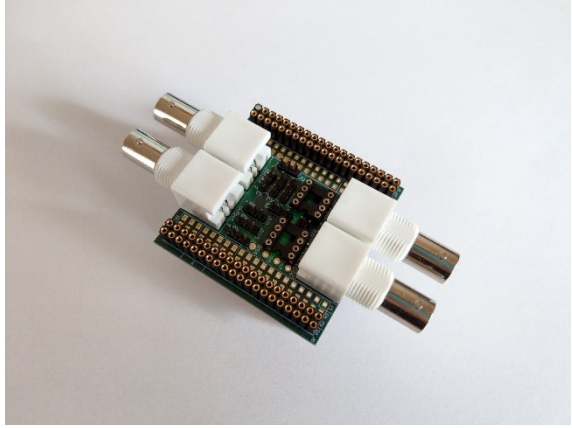

Considered Chips:

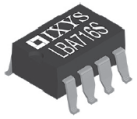

LBA716
Dual Single-Pole OptoMOS® Relays Normally Open & Normally Closed

Parameter	Rating	Units
Load Voltage	60	V
Load Current	1	A_{rms} / A_{DC}
On-Resistance (max)	0.4	Ω

Pin Configuration

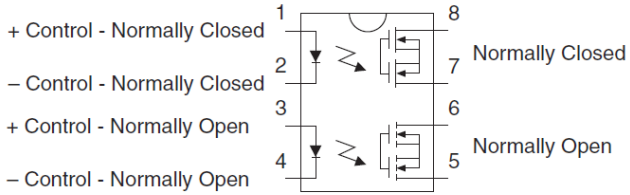

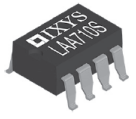

LAA710
Dual Single-Pole, Normally Open OptoMOS® Relay

Parameter	Ratings	Units
Blocking Voltage	60	V_P
Load Current	1	A_{rms} / A_{DC}
On-Resistance (max)	0.5	Ω

Pin Configuration

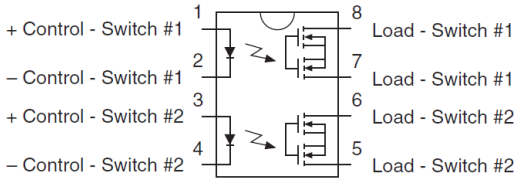

G3VM-61CR1
The highest class load current of MOS FET Relays realized with DIP8 package

- **60-V Relay: Continuous load current of 5 A (10 A) max. ***

Continuous load current	Connection A	Io	5	A
	Connection B		5	
	Connection C		10	

Connection Diagram

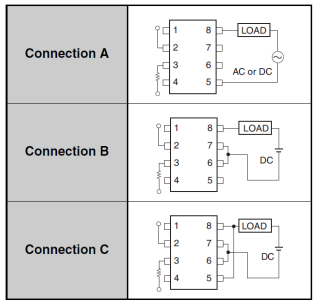

SU811 Solid state relais - schematic

Standard Jumper, In 1 – Out 1 Normally open (LBA716)

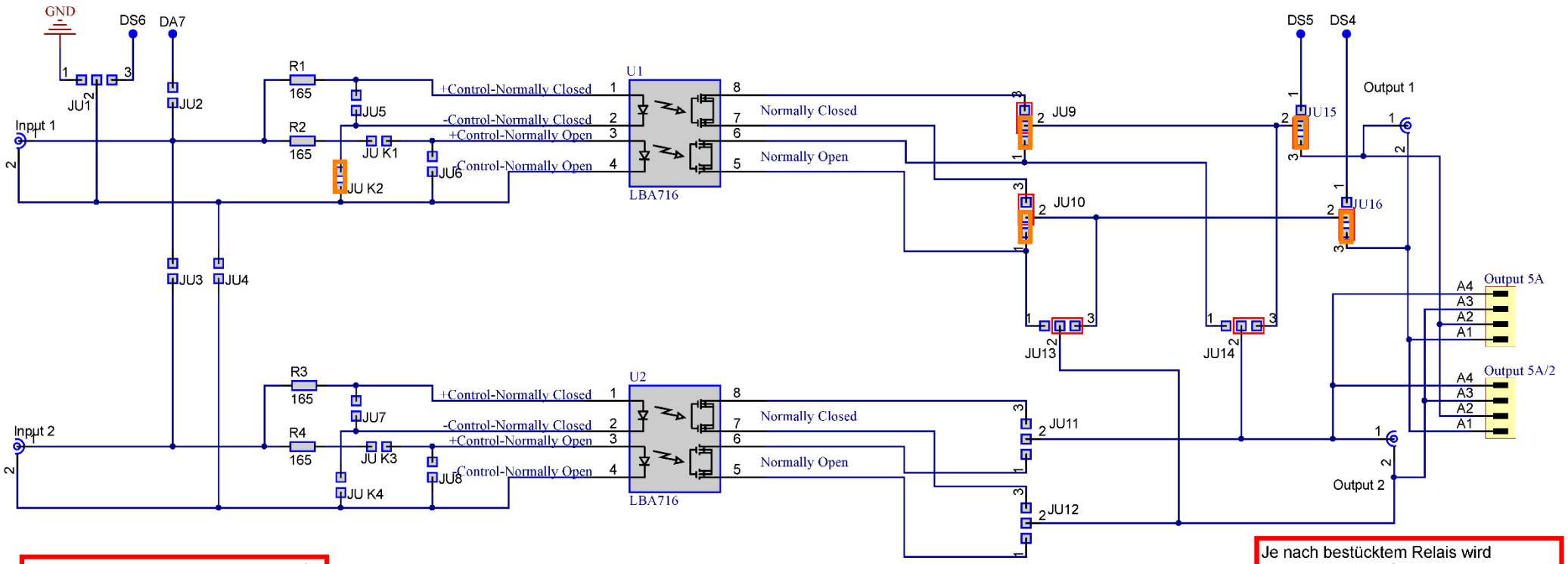

Die Vorwiderstände R1-R4 wurden auf 165Ohm dimesioniert damit man den G3VM-1CR1, den LAA710 und den LBA716 ohne Probleme nutzen kann und die Relais gewechselt werden können ohne den Vorwiderstand auch zu wechseln.
Jedoch bei längerer Benutzung eines Relais wird empfohlen den Vorwiderstand auf das Relais anzupassen, damit das Relais nicht zu stark belastet wird.
LAA710 = 165Ohm
LBA716 = 900Ohm
G3VM-1CR1 = 272Ohm

Je nach bestücktem Relais wird zwischen den BNC Buchsen (Output1,Output2) oder der Printklemme Output5A gewählt. Bei dem Printklemmen Ausgang kann man sich entscheiden ob der Stecker Output5A genutzt wird welcher bündig mit dem Gehäuse ist oder Output5A/2 welcher raussteht. Empfohlen wird wenn man den G3VM-1CR1 benutzt die Printklemmen zu verwenden, da nur diese wirklich für 5A ausgelegt sind.

Title: Solid State Relais		
Type:	Version: 4	Name: Johannes Bloos
Date: 12.02.2020	Size: A4	Sheet: of
File: SU811.SchDoc		

Physikalisches Institut Heidelberg

SU811 Solid state relais – Layout TOP

TOP

Standard Jumper

In 1 - Out 1 Normally open

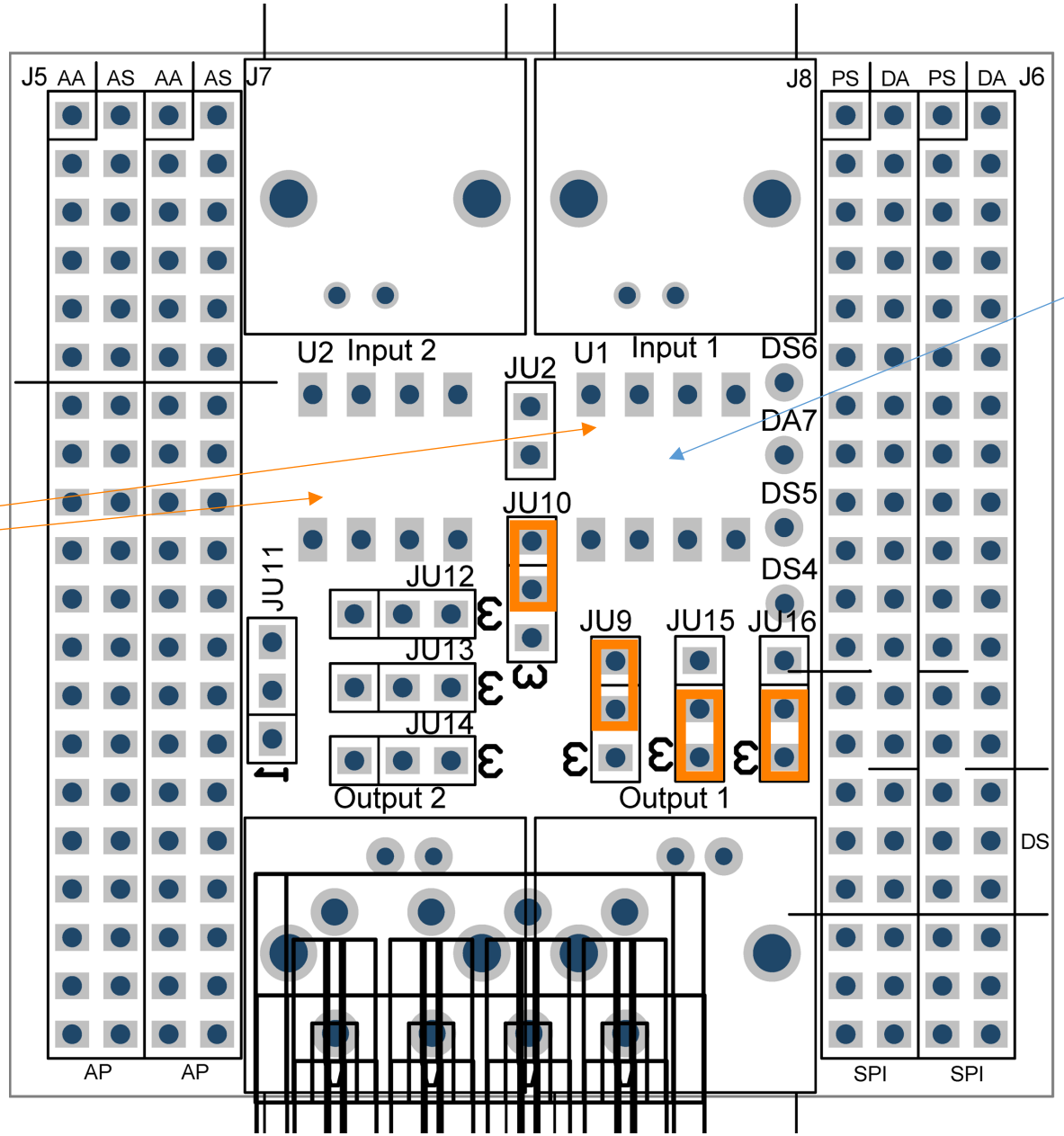

DIP8 Socket

Standard equipment of DIP8 socket channel 1: LBA716

SU811 Solid state relais – Layout BOTTOM

BOTTOM

Standard Jumper

In 1 - Out 1 Normally open

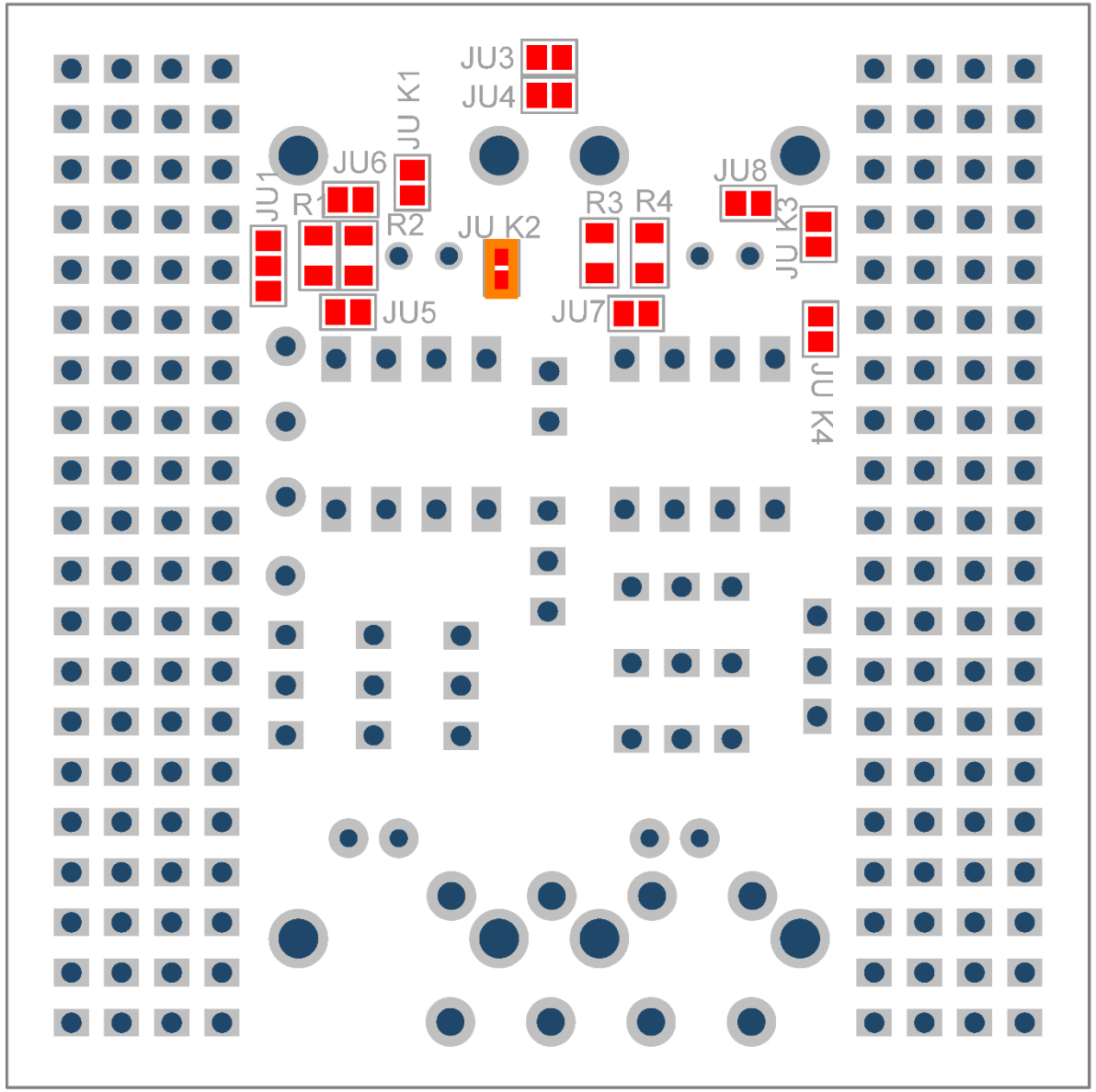

SU811 Solid state relais - schematic

In 1 – Out 1 Normally closed

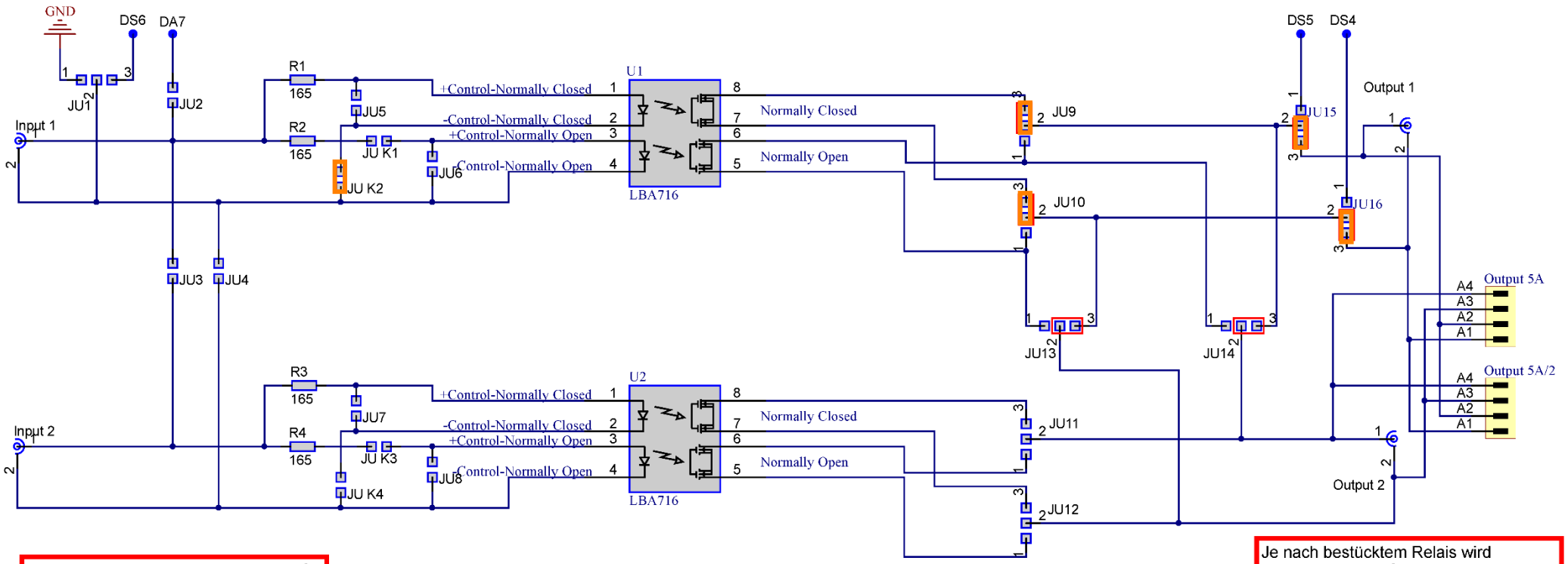

Die Vorwiderstände R1-R4 wurden auf 165Ohm dimesioniert damit man den G3VM-1CR1, den LAA710 und den LBA716 ohne Probleme nutzen kann und die Relais gewechselt werden können ohne den Vorwiderstand auch zu wechseln.
Jedoch bei längerer Benutzung eines Relais wird empfohlen den Vorwiderstand auf das Relais anzupassen, damit das Relais nicht zu stark belastet wird.
LAA710 = 165Ohm
LBA716 = 900Ohm
G3VM-1CR1 = 272Ohm

Je nach bestücktem Relais wird zwischen den BNC Buchsen (Output1,Output2) oder der Printklemme Output5A gewählt. Bei dem Printklemmen Ausgang kann man sich entscheiden ob der Stecker Output5A genutzt wird welcher bündig mit dem Gehäuse ist oder Output5A/2 welcher raussteht. Empfohlen wird wenn man den G3VM-1CR1 benutzt die Printklemmen zu verwenden, da nur diese wirklich für 5A ausgelegt sind.

Title: Solid State Relais		
Type:	Version: 4	Name: Johannes Bloos
Date: 12.02.2020	Size: A4	Sheet: of
File: SU811.SchDoc		

Physikalisches Institut Heidelberg

SU811 Solid state relais – Layout TOP

TOP

In 1 – Out 1 Normally closed

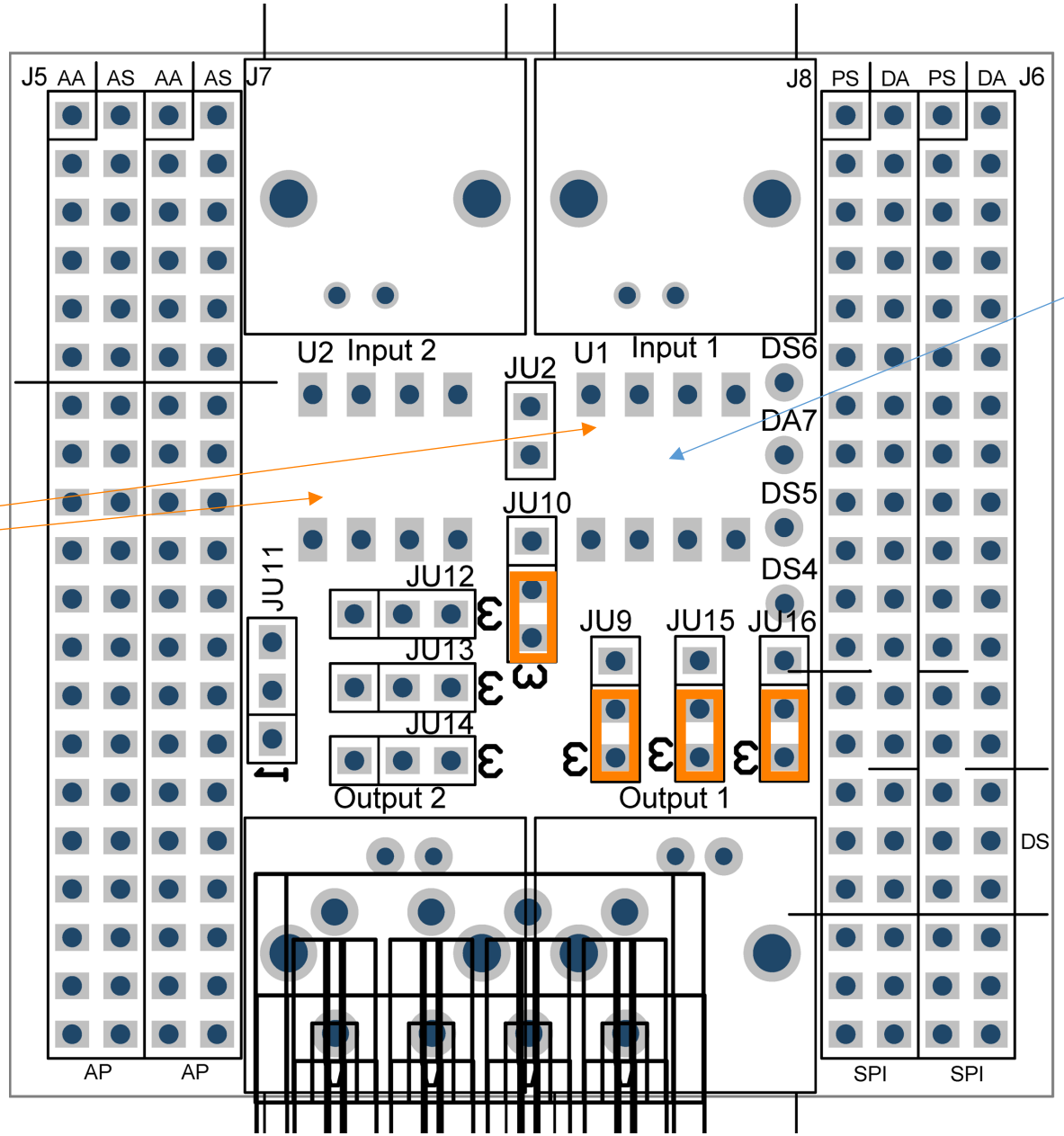

DIP8 Socket

Standard equipment of DIP8 socket channel 1: LBA716

SU811 Solid state relais – Layout BOTTOM

In 1 – Out 1 Normally closed

BOTTOM

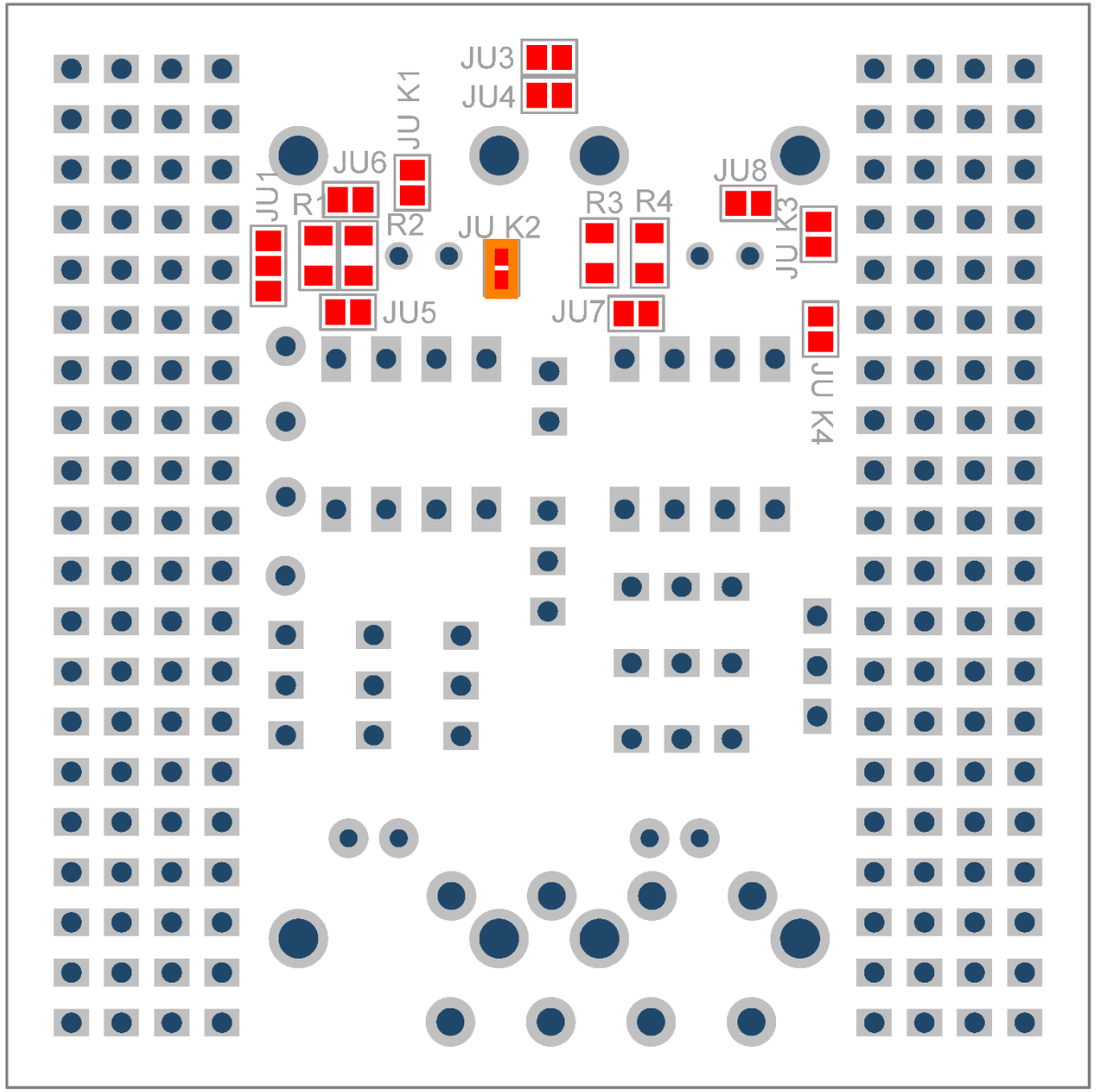

SU811 Solid state relais - schematic

1 input (In 1), two outputs: Out 1 normally closed, Out 2 normally open

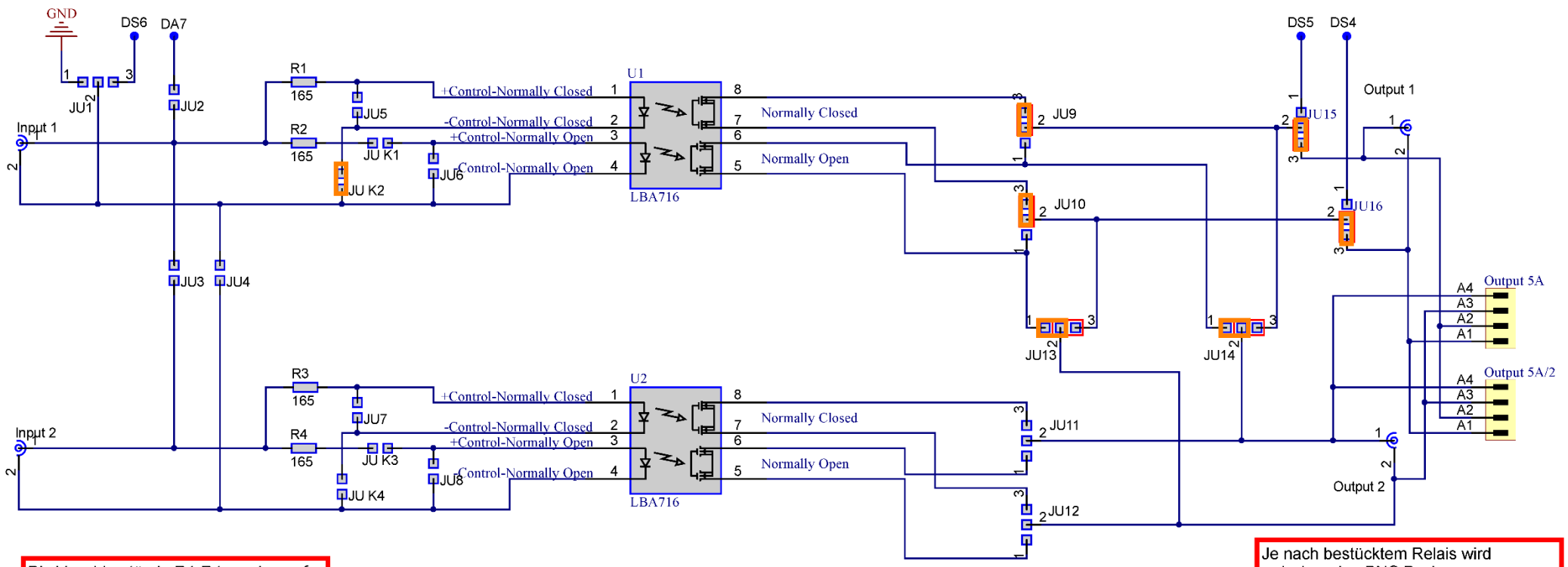

Die Vorwiderstände R1-R4 wurden auf 165Ohm dimesioniert damit man den G3VM-1CR1, den LAA710 und den LBA716 ohne Probleme nutzen kann und die Relais gewechselt werden können ohne den Vorwiderstand auch zu wechseln.
Jedoch bei längerer Benutzung eines Relais wird empfohlen den Vorwiderstand auf das Relais anzupassen, damit das Relais nicht zu stark belastet wird.
LAA710 = 165Ohm
LBA716 = 900Ohm
G3VM-1CR1 = 272Ohm

Je nach bestücktem Relais wird zwischen den BNC Buchsen (Output1,Output2) oder der Printklemme Output5A gewählt. Bei dem Printklemmen Ausgang kann man sich entscheiden ob der Stecker Output5A genutzt wird welcher bündig mit dem Gehäuse ist oder Output5A/2 welcher raussteht. Empfohlen wird wenn man den G3VM-1CR1 benutzt die Printklemmen zu verwenden, da nur diese wirklich für 5A ausgelegt sind.

Title: Solid State Relais		
Type:	Version: 4	Name: Johannes Bloos
Date: 12.02.2020	Size: A4	Sheet: of
File: SU811.SchDoc		

Physikalisches Institut Heidelberg

SU811 Solid state relais – Layout TOP

TOP

1 input (In1), two outputs:
Out1 normally closed
Out2 normally open

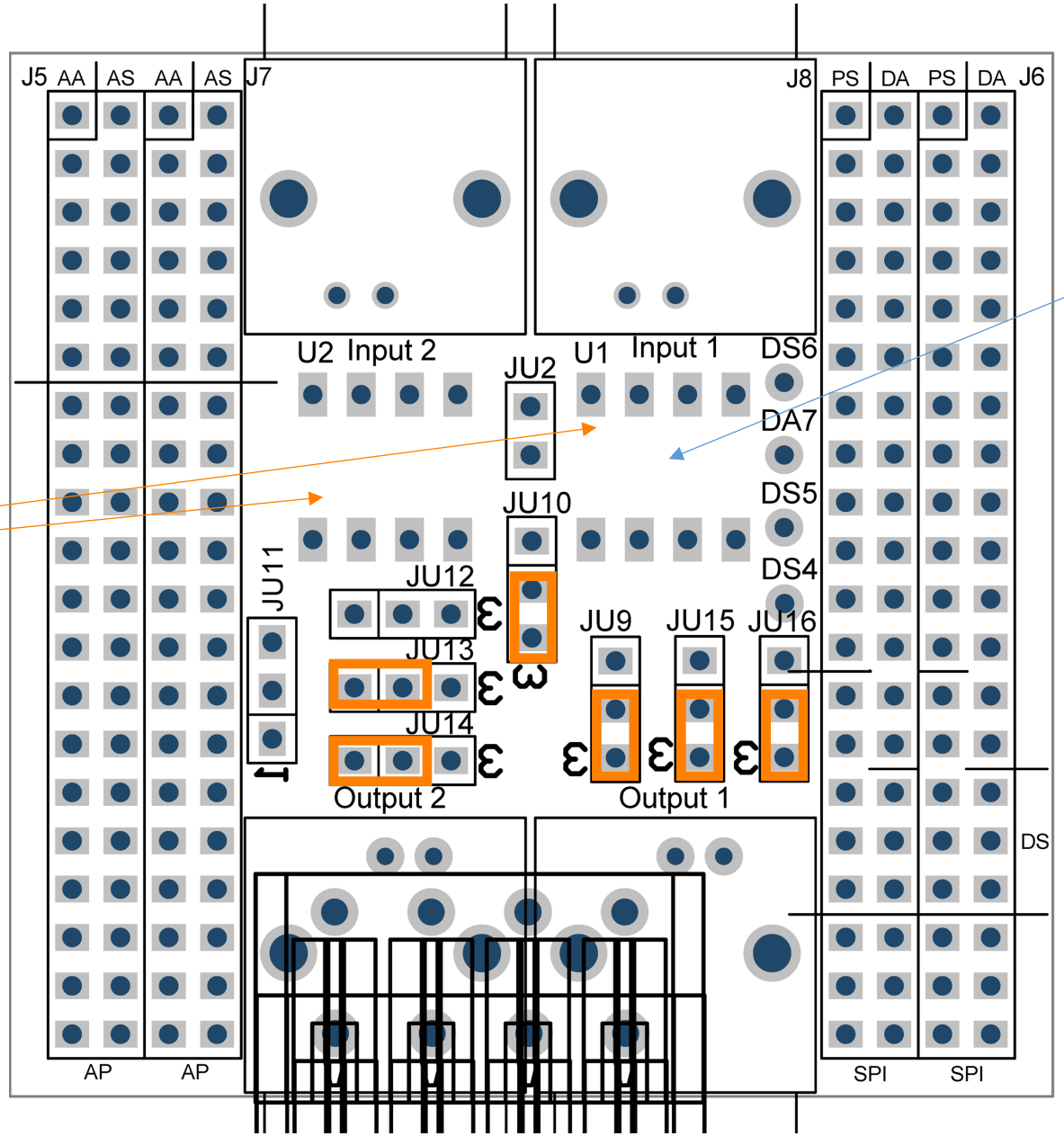

DIP8 Socket

Standard equipment of DIP8 socket channel 1: LBA716

SU811 Solid state relais – Layout BOTTOM

1 input (In 1), two outputs:
Out 1 normally closed
Out 2 normally open

BOTTOM

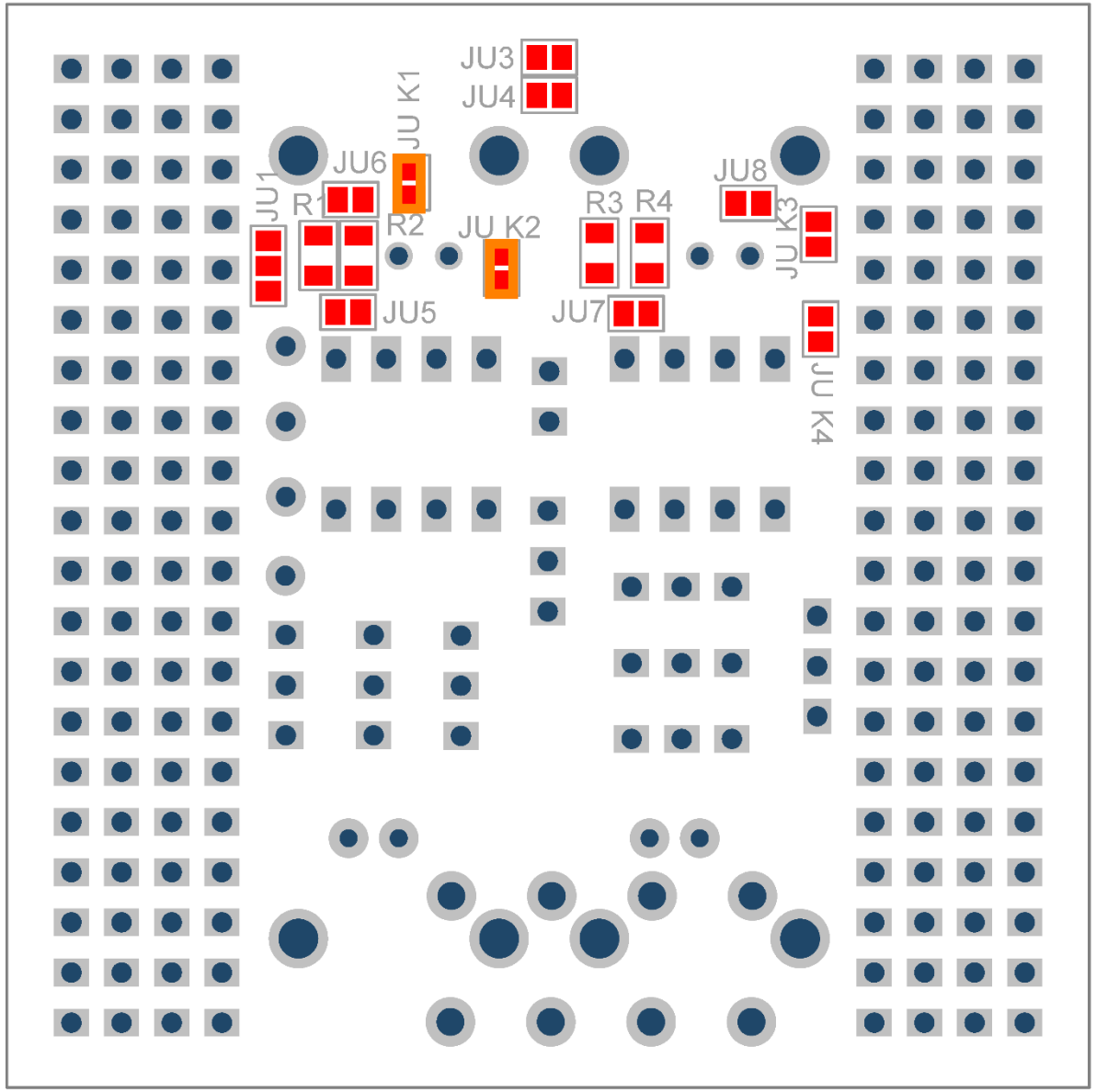

SU811 Notes production

- Check for the latest production version and check for additional notes on the workshop server

- Add Polarity Protection: Pin 39: Top: Block pin with solder. Bottom: Cut pin

- **Set standard jumper settings**

- Put PCBs into Aluminium case. Drawings of the cases can be found here:
  \\pi2\microcontroller\QD-Ultracold\Q-El - e-lego\Cases and Heatsink Needed: **Case SU811**

- Label the finished boxes with the Part-number SU811
- **Label the inputs and outputs (IN1,IN2, OUT1, OUT2)**

- Add some notes to the workshop server if there has been some modifications to the previous production version

- If not available yet, make pictures of the produced component an put them on the workshop server

Q-IL004 Photodiode Interlock

e-lego unit

Photodiode
VV67 (Transimpedance Ampl.)
SU 800 (Buffer Amplifier)

Microcontroller
SU803

Solid State Relais
SU811

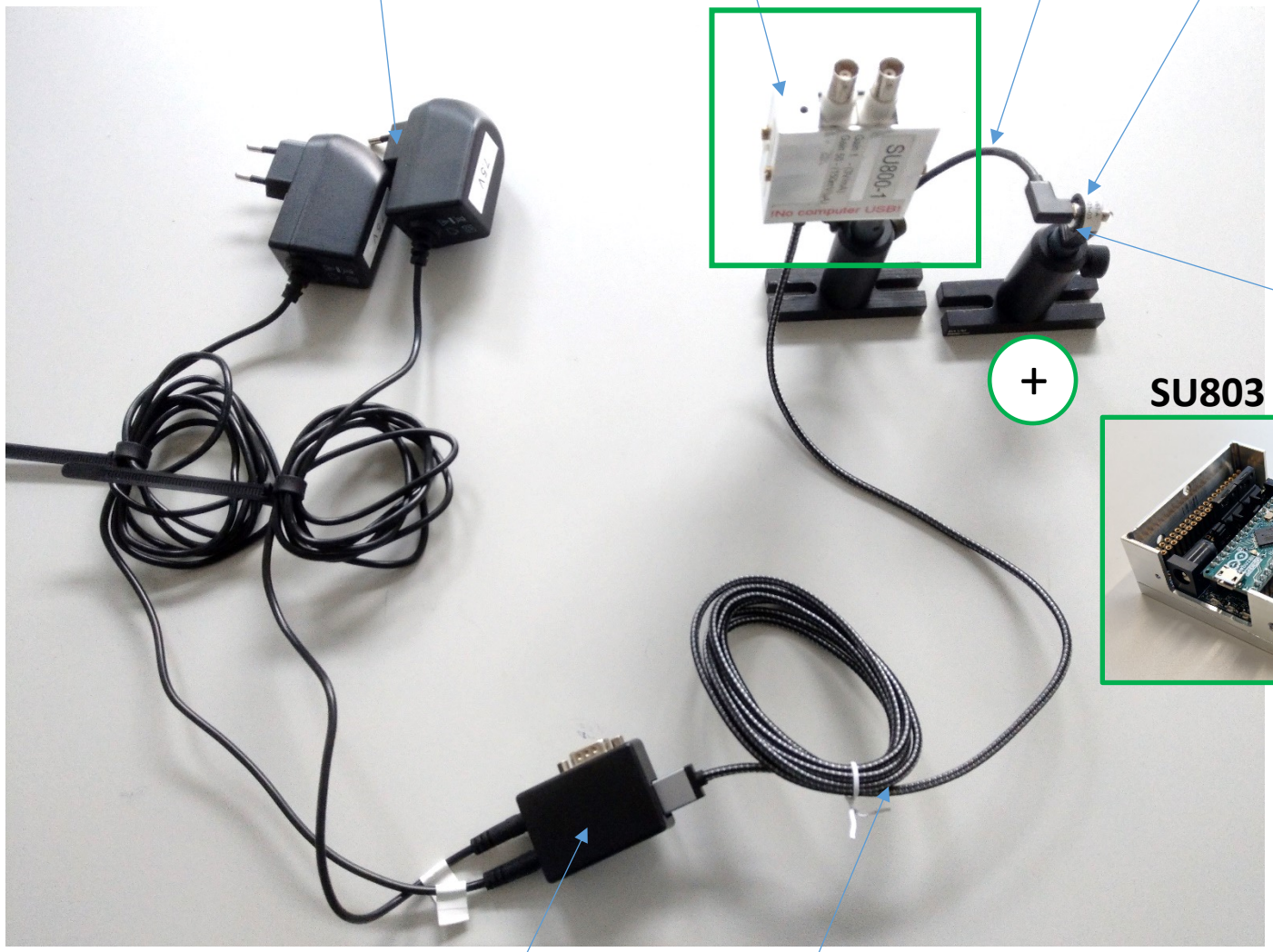

Q-IL004 Photodiode Interlock

Configuration

SU800 and SU803: Standardjumper (blue) with additional setting (marked in red), SU811: Standardjumper (orange) with additional setting (marked in red)

Block Diagram

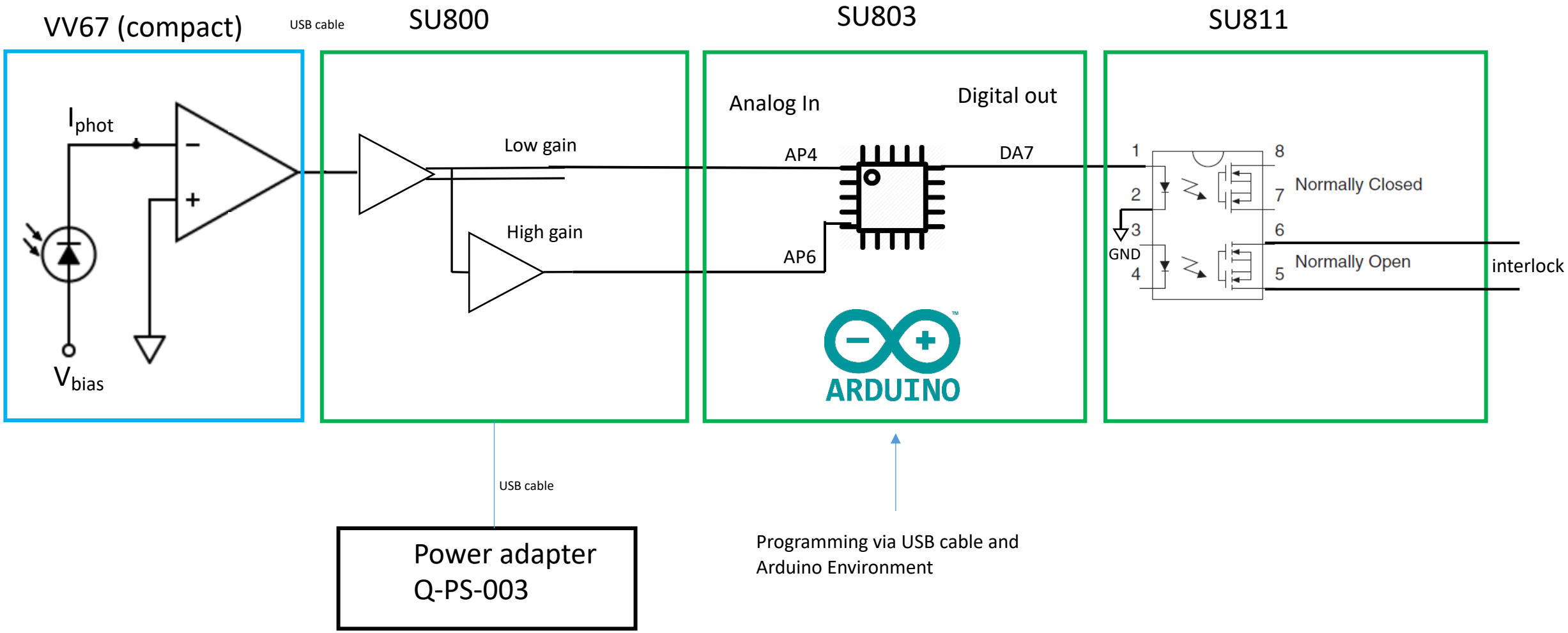

Q-IL004 Photodiode Interlock

Setting up SU800

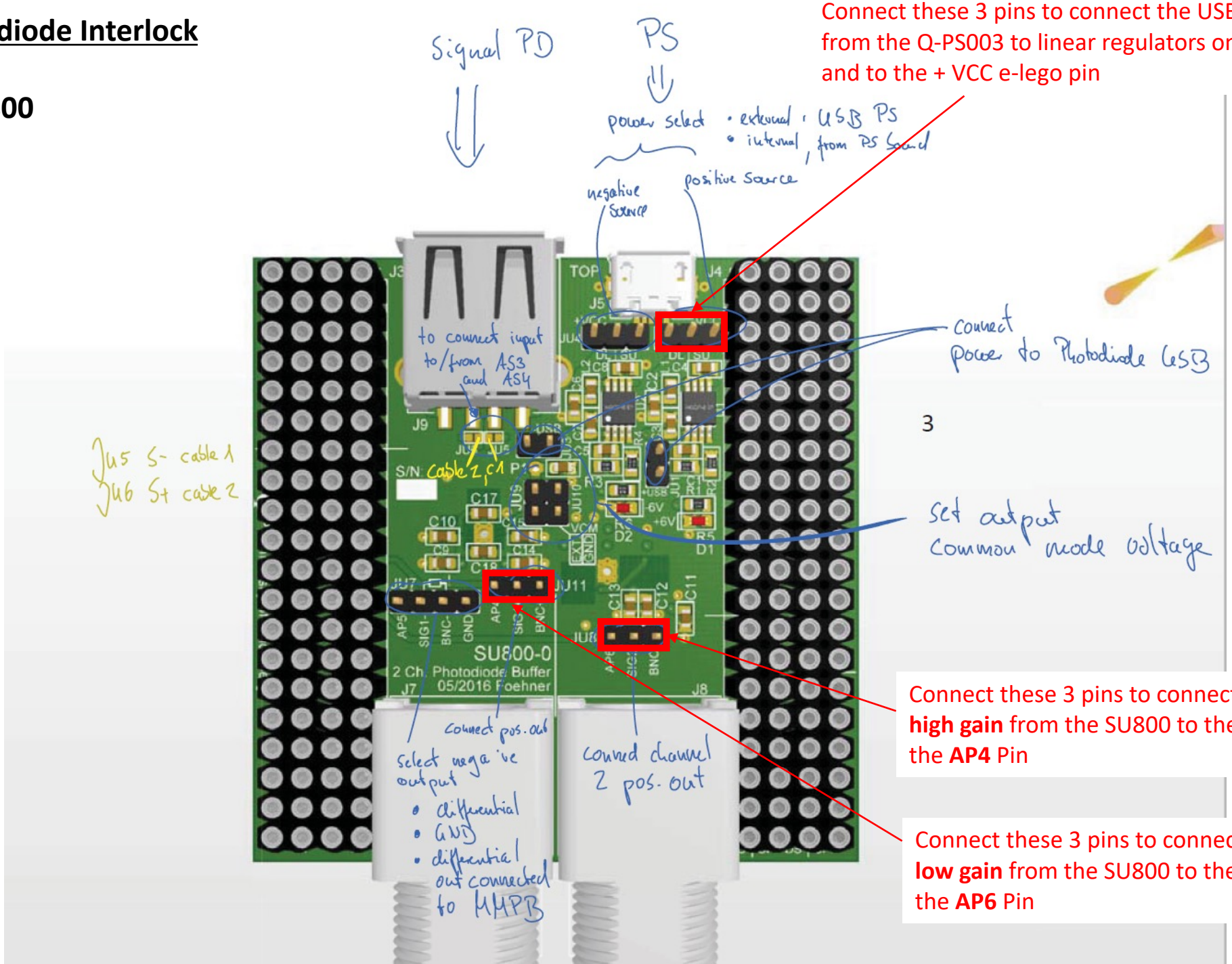

Connect these 3 pins to connect the USB input from the Q-PS003 to linear regulators on SU800-1 and to the + VCC e-lego pin

Connect these 3 pins to connect the analog output **high gain** from the SU800 to the BNC output and to the **AP4** Pin

Connect these 3 pins to connect the analog output **low gain** from the SU800 to the BNC output and to the **AP6** Pin

Q-IL004 Photodiode Interlock

Jumper Settings SU-803

Donnerstag, 18. Mai 2017 19:08

Blue: factory jumper settings.

red: optional settings.

Connect AP4 to AS1 and AP6 to AS2

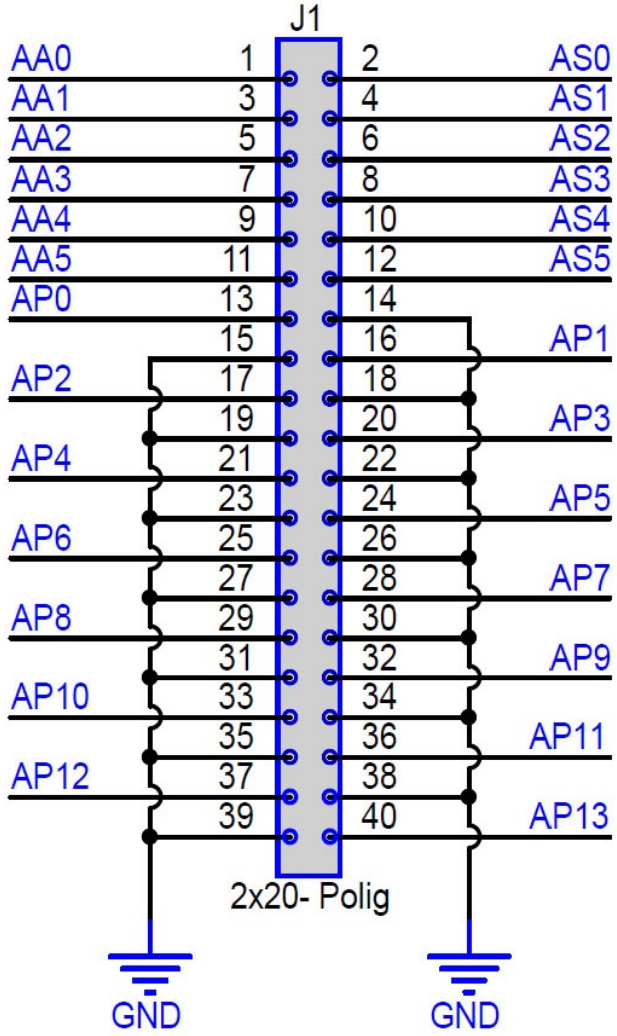

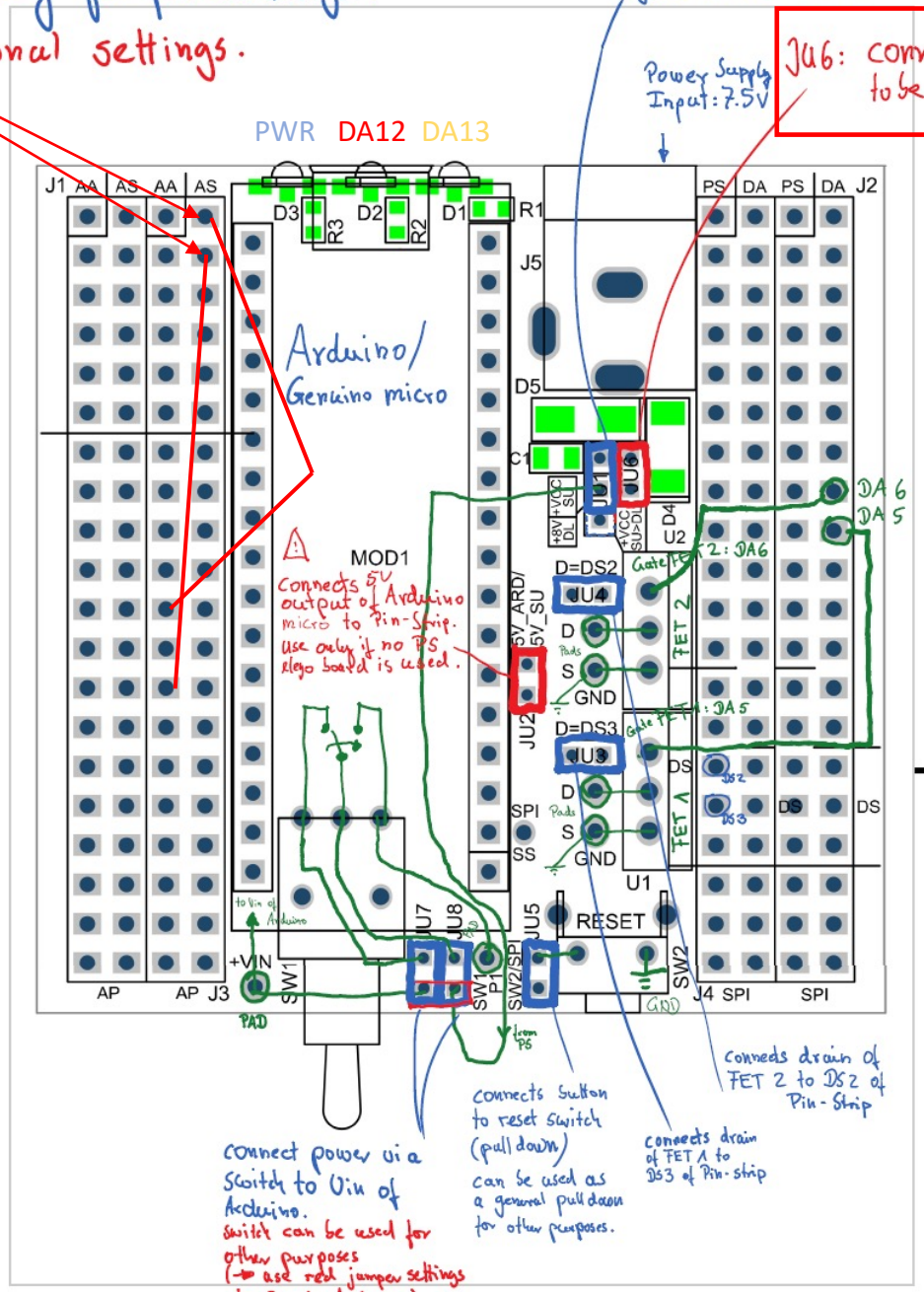

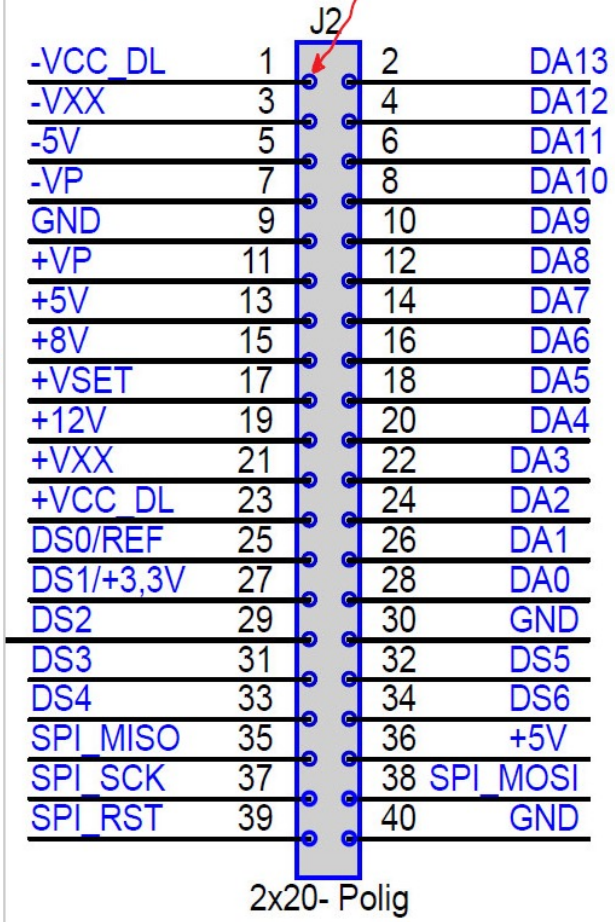

- green: routes on the PCB for information. (Can be ignored)

Q-IL004 Photodiode Interlock

Setting up SU811

Standard Jumper – LBA16 – Normally closed

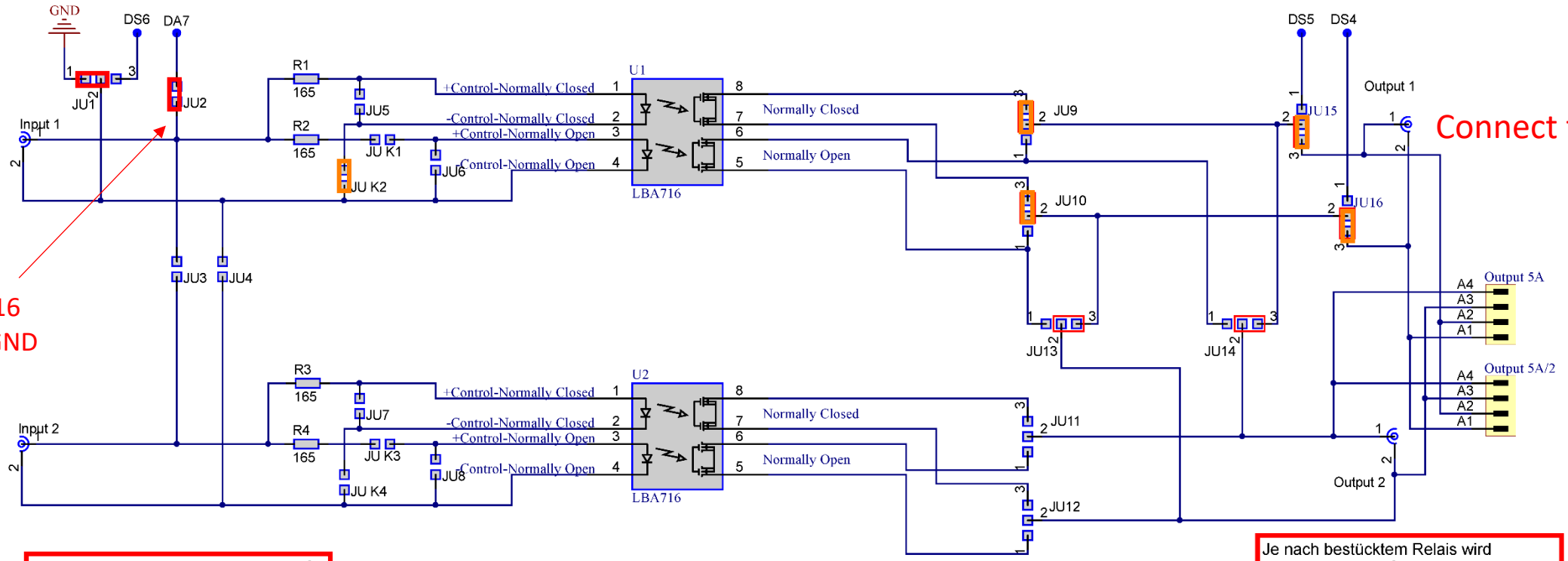

Connect DA7 to input 1 of LBA716 and input 2 to GND

Connect to driver

Die Vorwiderstände R1-R4 wurden auf 165Ohm dimesioniert damit man den G3VM-1CR1, den LAA710 und den LBA716 ohne Probleme nutzen kann und die Relais gewechselt werden können ohne den Vorwiderstand auch zu wechseln.
Jedoch bei längerer Benutzung eines Relais wird empfohlen den Vorwiderstand auf das Relais anzupassen, damit das Relais nicht zu stark belastet wird.
LAA710 = 165Ohm
LBA716 = 900Ohm
G3VM-1CR1 = 272Ohm

Use LBA716

Use normally closed (high active)

→ Driver off when e-lego powered off

Je nach bestücktem Relais wird zwischen den BNC Buchsen (Output1,Output2) oder der Printklemme Output5A gewählt. Bei dem Printklemmen Ausgang kann man sich entscheiden ob der Stecker Output5A genutzt wird welcher bündig mit dem Gehäuse ist oder Output5A/2 welcher raussteht. Empfohlen wird wenn man den G3VM-1CR1 benutzt die Printklemmen zu verwenden, da nur diese wirklich für 5A ausgelegt sind.

Title: Solid State Relais		
Type:	Version: 4	Name: Johannes Bloos
Date: 12.02.2020	Size: A4	Sheet: of
File: SU811.SchDoc		

Physikalisches Institut Heidelberg

Q-IL004 Photodiode Interlock
Setting up SU811

SU811 Solid state relais – Layout TOP

Standard Jumper

Set to connect + input to DA7

DIP8 Socket

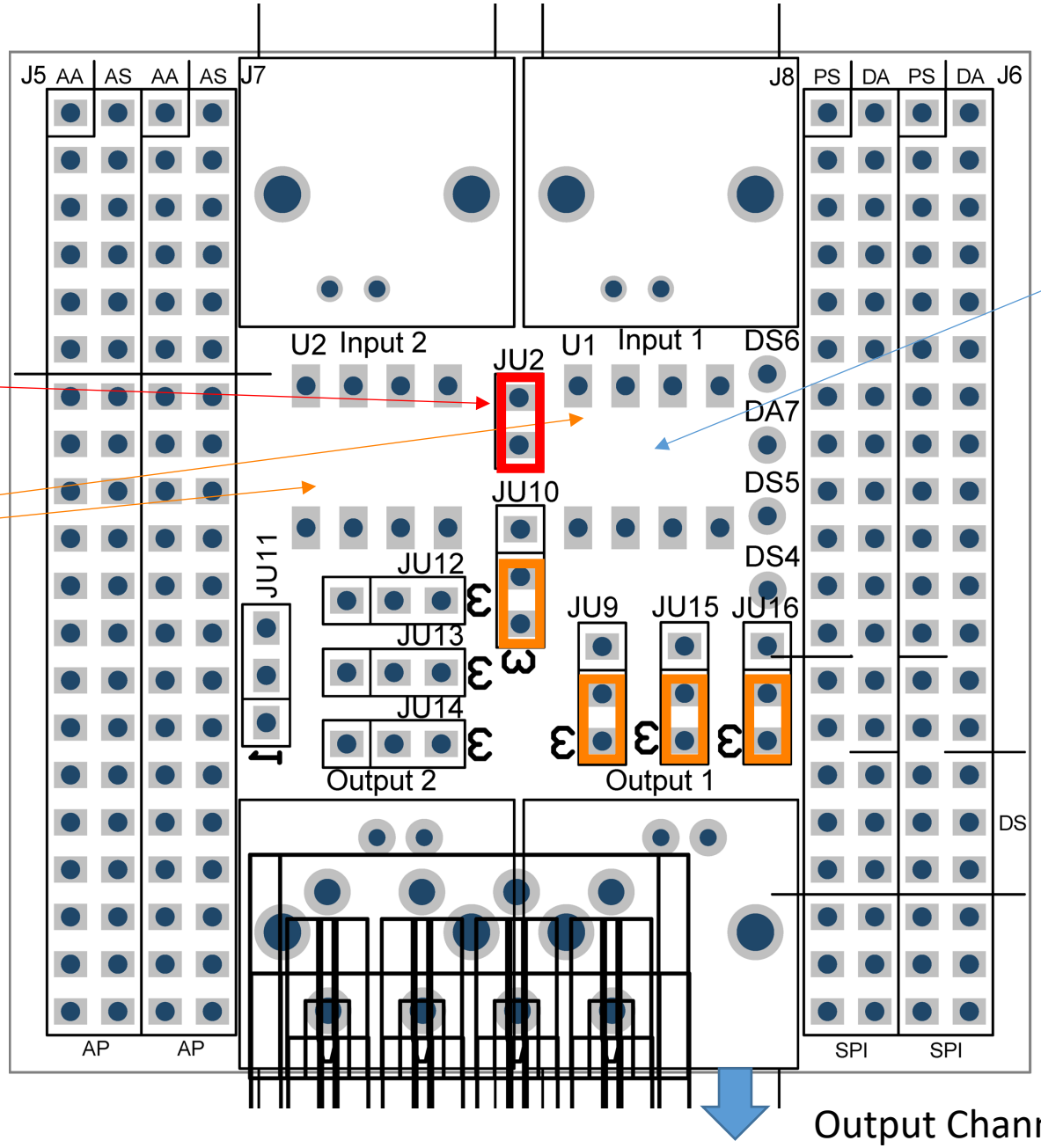

Standard equipment of DIP8 socket channel 1: LBA716

Output Channel 1

Q-IL004 Photodiode Interlock
Setting up SU811

BOTTOM

SU811 Solid state relais – Layout BOTTOM

Standard Jumper

Set to connect – input to GND

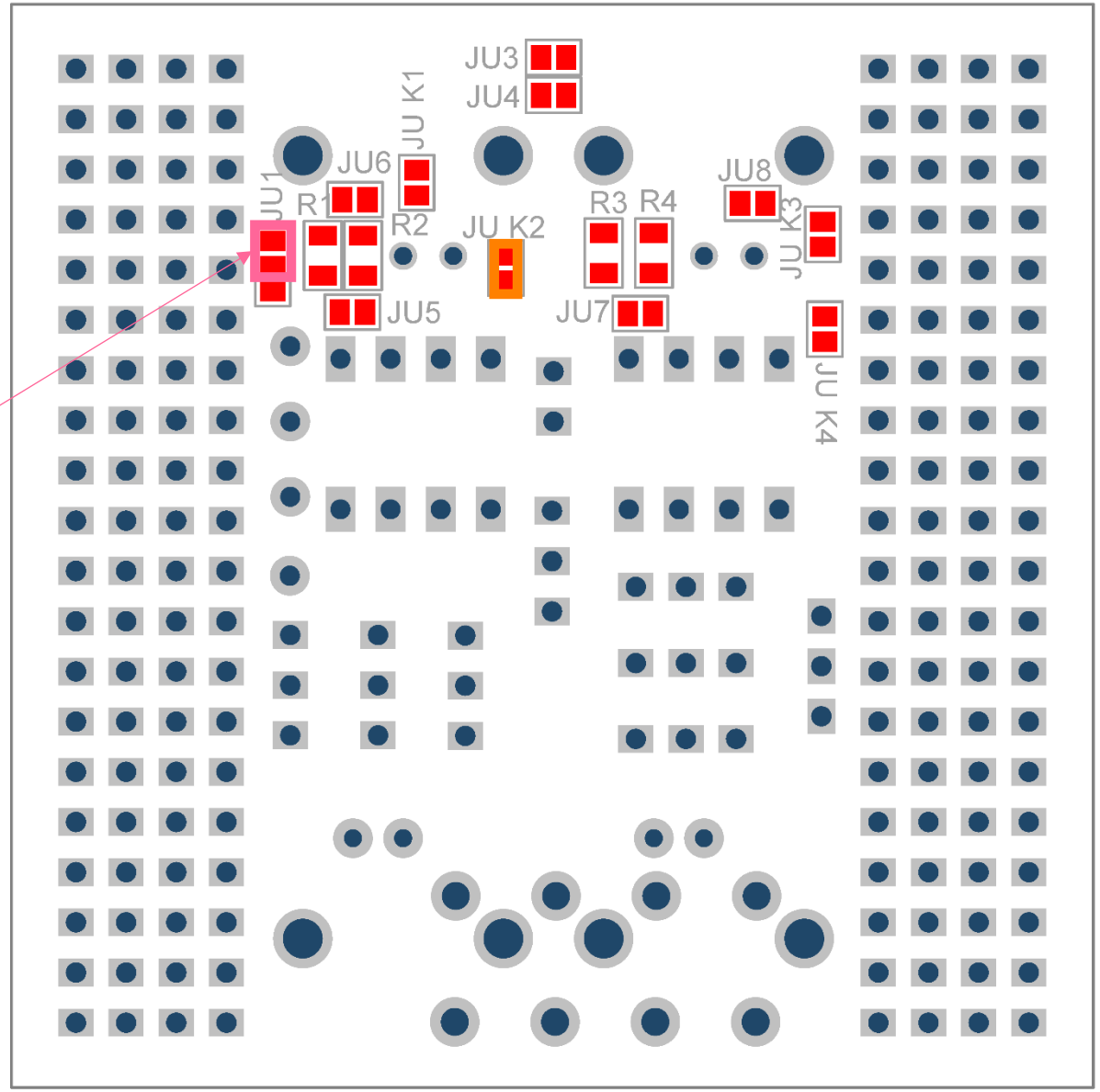

SU813 H-bridge Driver

e-lego module

Inputs						
	label	Opto		elego		pin
	ALI	Opto1	+	BNC 1	+	DA11
			-		-	DA10
	BLI	Opto2	+	BNC 2	+	DA9
			-		-	DA8
	AHI/BHI	Opto3	+	BNC 3	+	DA3
			-		-	DA7
	DIS	Opto4	+	BNC 4	+	DA2
			-		-	DA4

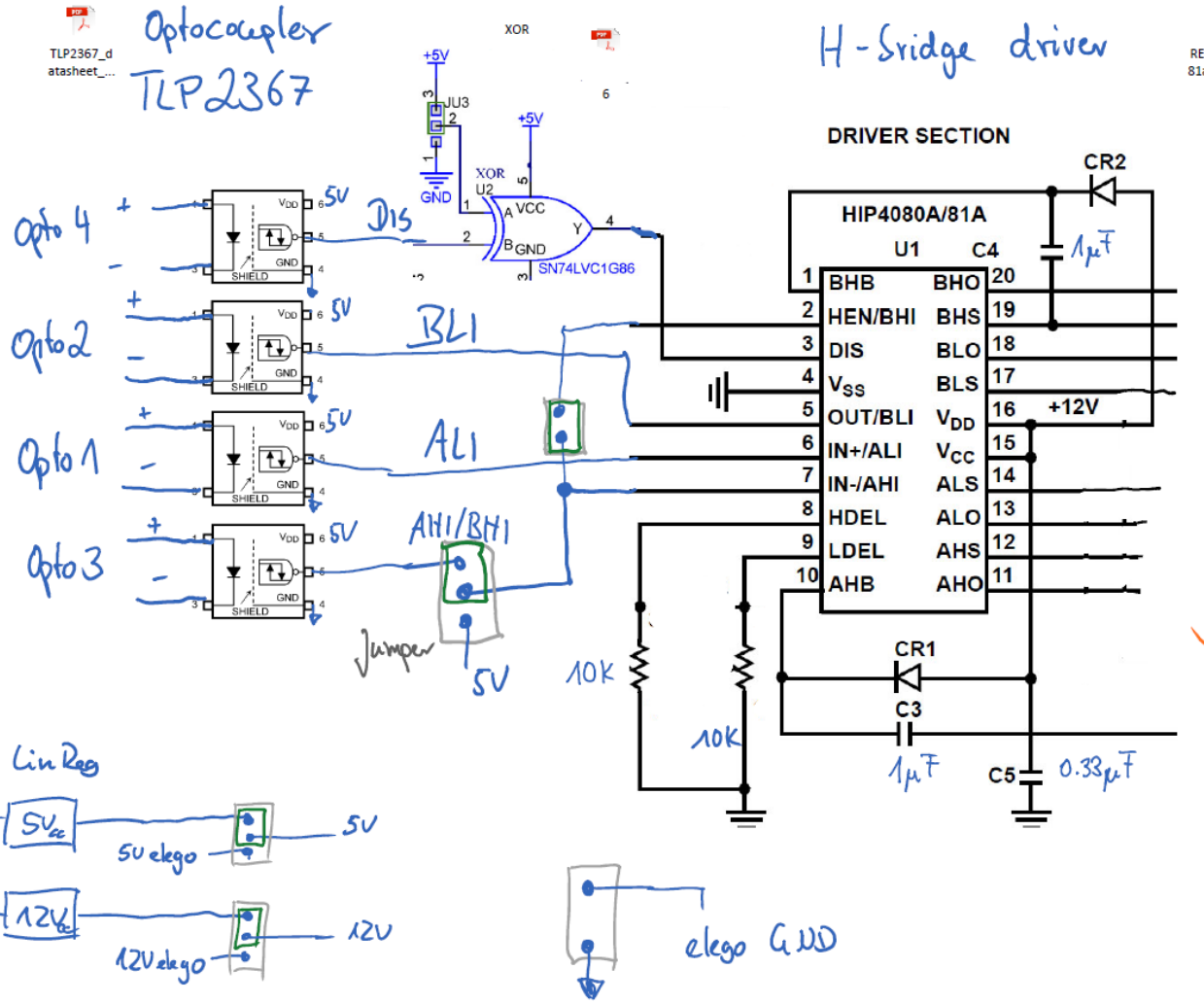

PDIP package in DIP 20 IC socket

Outputs						
HIP pin	label	FET		elego		pin
11	AHO	Q1	Gate	BNC 1	+	AS0
12	AHS		Source		-	AS1
20	BHO	Q3	Gate	BNC 3	+	AP11
19	BHS		Source		-	AP13
13	ALO	Q2	Gate	BNC 2	+	AS2
14	ALS		Source		-	AS5
18	BLO	Q4	Gate	BNC 4	+	DS4
17	BLS		Source		-	DS5

⚠ Layouting: Do not connect elego-GND with GND

green: standard jumper settings

Opto

6.1. Truth Table

Input	LED	Output
H	ON	L
L	OFF	H

XOR

Table 1. Function Table

INPUTS		OUTPUT
A	B	Y
L	L	L
L	H	H
H	L	H
H	H	L

Hip

TRUTH TABLE

INPUT				OUTPUT	
ALI, BLI	AHI, BHI	U/V	DIS	ALO, BLO	AHO, BHO
X	X	X	1	0	0
1	X	0	0	1	0
0	1	0	0	0	1
0	0	0	0	0	0
X	X	1	X	0	0

NOTE: X signifies that input can be either a "1" or "0"

SU813 H-bridge Driver

Schematic driver

Inputs						
	label	Opto		elego		pin
	ALI	Opto1	+	BNC 1	+	DA11
			-		-	DA10
	BLI	Opto2	+	BNC 2	+	DA9
			-		-	DA8
	AHI/BHI	Opto3	+	BNC 3	+	DA3
			-		-	DA7
	DIS	Opto4	+	BNC 4	+	DA2
			-		-	DA4

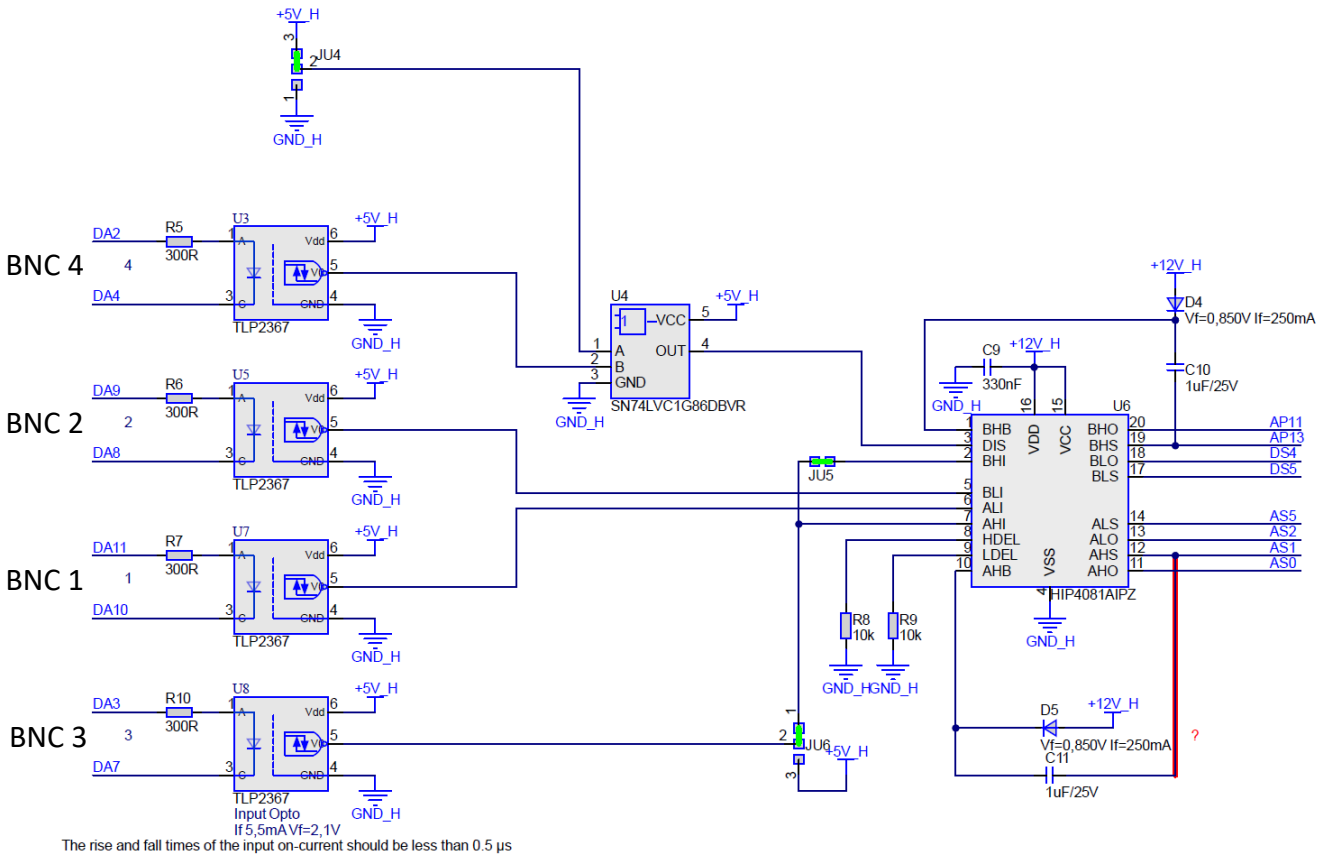

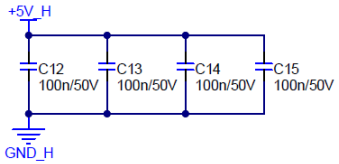

default Jumper setting

Outputs						
HIP pin	label	FET		elego		pin
11	AHO	Q1	Gate	BNC 1	+	AS0
12	AHS		Source		-	AS1
20	BHO	Q3	Gate	BNC 3	+	AP11
19	BHS		Source		-	AP13
13	ALO	Q2	Gate	BNC 2	+	AS2
14	ALS		Source		-	AS5
18	BLO	Q4	Gate	BNC 4	+	DS4
17	BLS		Source		-	DS5

Opto

6.1. Truth Table

Input	LED	Output
H	ON	L
L	OFF	H

XOR

Table 1. Function Table

INPUTS		OUTPUT
A	B	Y
L	L	L
L	H	H
H	L	H
H	H	L

Hip

TRUTH TABLE

INPUT				OUTPUT	
ALI, BLI	AHI, BHI	U/V	DIS	ALO, BLO	AHO, BHO
X	X	X	1	0	0
1	X	0	0	1	0
0	1	0	0	0	1
0	0	0	0	0	0
X	X	1	X	0	0

NOTE: X signifies that input can be either a "1" or "0".

SU813 H-bridge Driver

e-lego module

Power:

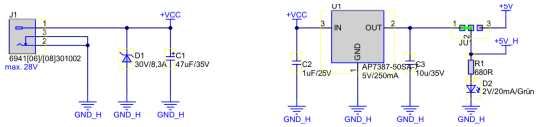

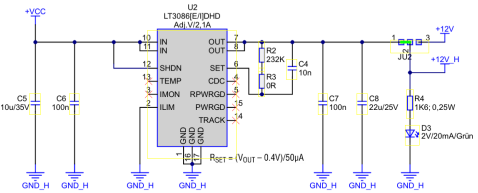

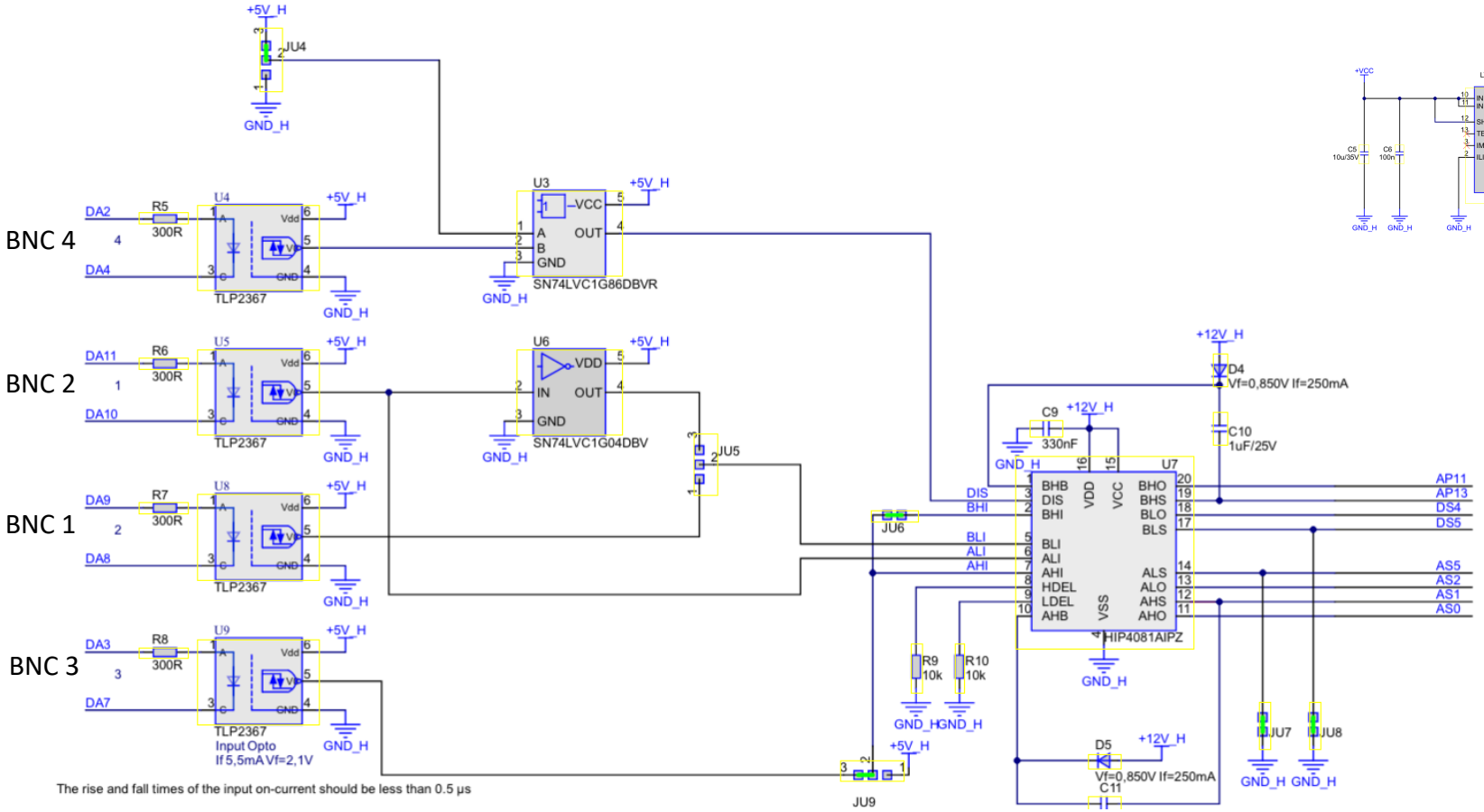

Inputs						
	label	Opto		elego		pin
	ALI	Opto1	+	BNC 1	+	DA11
			-		-	DA10
	BLI	Opto2	+	BNC 2	+	DA9
			-		-	DA8
	AHI/BHI	Opto3	+	BNC 3	+	DA3
			-		-	DA7
	DIS	Opto4	+	BNC 4	+	DA2
			-		-	DA4

Light green: default Jumper

Outputs						
HIP pin	label	FET		elego		pin
11	AHO	Q1	Gate	BNC 1	+	AS0
12	AHS		Source		-	AS1
20	BHO	Q3	Gate	BNC 3	+	AP11
19	BHS		Source		-	AP13
13	ALO	Q2	Gate	BNC 2	+	AS2
14	ALS		Source		-	AS5
18	BLO	Q4	Gate	BNC 4	+	DS4
17	BLS		Source		-	DS5

Opto

6.1. Truth Table

Input	LED	Output
H	ON	L
L	OFF	H

XOR

Table 1. Function Table

INPUTS		OUTPUT
A	B	Y
L	L	L
L	H	H
H	L	H
H	H	L

Hip

TRUTH TABLE

INPUT				OUTPUT	
ALI, BLI	AHI, BHI	U/V	DIS	ALO, BLO	AHO, BHO
X	X	X	1	0	0
1	X	0	0	1	0
0	1	0	0	0	1
0	0	0	0	0	0
X	X	1	X	0	0

NOTE: X signifies that input can be either a "1" or "0".

SU813 H-bridge Driver

Layout

default jumper settings

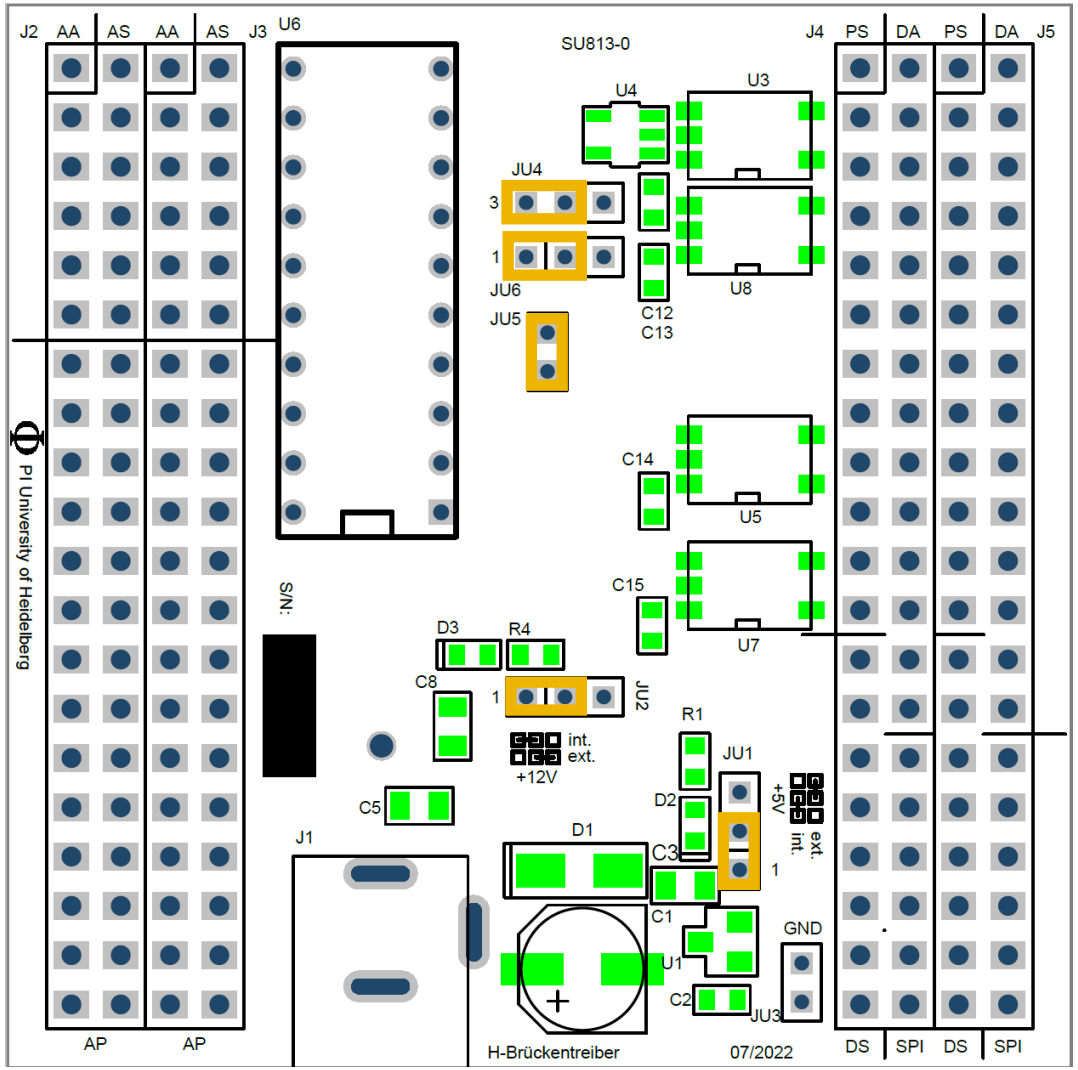

Q-CC001-5 – HQA H-bridge prototype

e-lego unit

Stack

SU813 H-bridge Driver
SU802 BNC connector (Outputs)
SU802 BNC connector (Inputs)

Q-CC001-5 connection table

Outputs						
HIP pin	**label**	**FET**		**elego**		**pin**
11	AHO	Q1	Gate	BNC 1	+	AS0
12	AHS		Source		-	AS1
20	BHO	Q3	Gate	BNC 3	+	AP11
19	BHS		Source		-	AP13
13	ALO	Q2	Gate	BNC 2	+	AS2
14	ALS		Source		-	AS5
18	BLO	Q4	Gate	BNC 4	+	DS4
17	BLS		Source		-	DS5
Inputs						
	label	**Opto**		**elego**		**pin**
	ALI	Opto1	+	BNC 1	+	DA11
			-		-	DA10
	BLI	Opto2	+	BNC 2	+	DA9
			-		-	DA8
	AHI/BHI	Opto3	+	BNC 3	+	DA3
			-		-	DA7
	DIS	Opto4	+	BNC 4	+	DA2
			-		-	DA4

BNC Inputs for Q-CC001-5

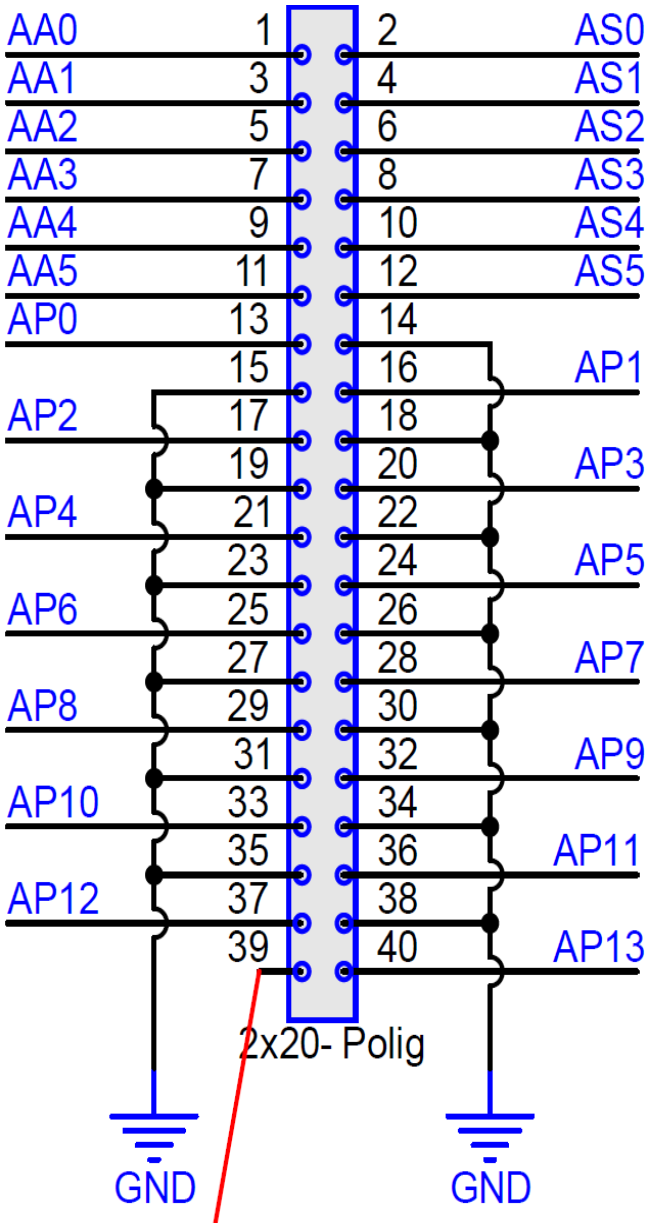

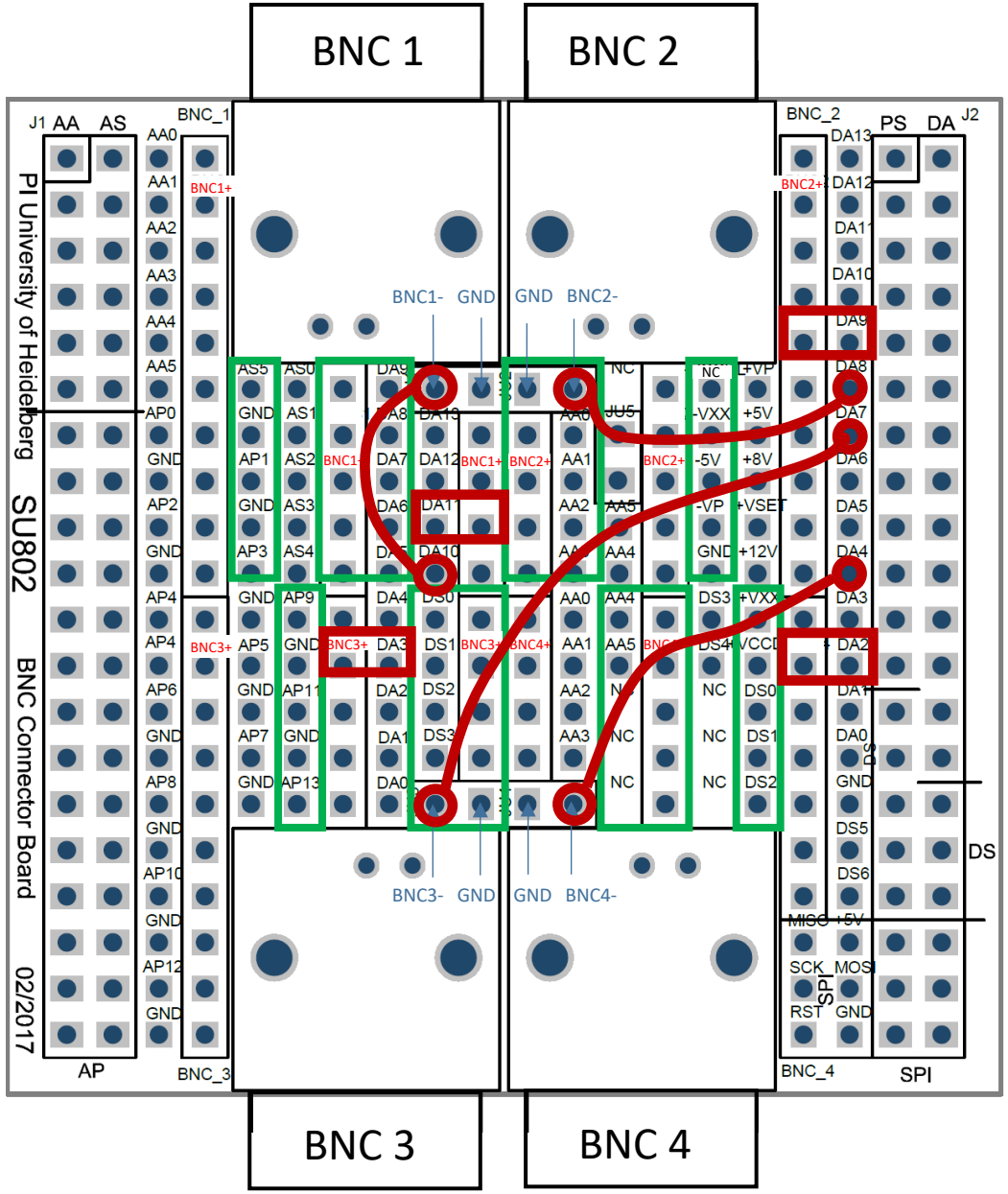

DL801 (DL800)

-VCC1 (-VCC_DL)	1	2	DA13
-VP2 (-VXX)	3	4	DA12
-5V	5	6	DA11
-VP1 (-Vp)	7	8	DA10
GND	9	10	DA9
+VP	11	12	DA8
+5V	13	14	DA7
+VCC2 (+8V)	15	16	DA6
+VSET1 (Vset)	17	18	DA5
+12V	19	20	DA4
+VSET2 (+VXX)	21	22	DA3
+VCC1	23	24	DA2
DS0/REF	25	26	DA1
DS1/+3,3V	27	28	DA0
DS2	29	30	GND
DS3	31	32	DS5
DS4	33	34 (DS6)	-VCC2
SPI_MISO	35	36	+5V
SPI_SCK	37	38	SPI_MOSI
SPI_RST	39	40	GND

Default Values:

-VCC1:	-7V (-13V/-24V)
-VP2:	-2,7V
-VP1:	-6V
-VCC2:	-13V (-24V)
+VP: =	+VSET1
+VCC2:	+7V
+VSET1:	+6V
+VSET2:	+18V
+VCC1:	+13V (+24V)

BNC Output for Q-CC001-5

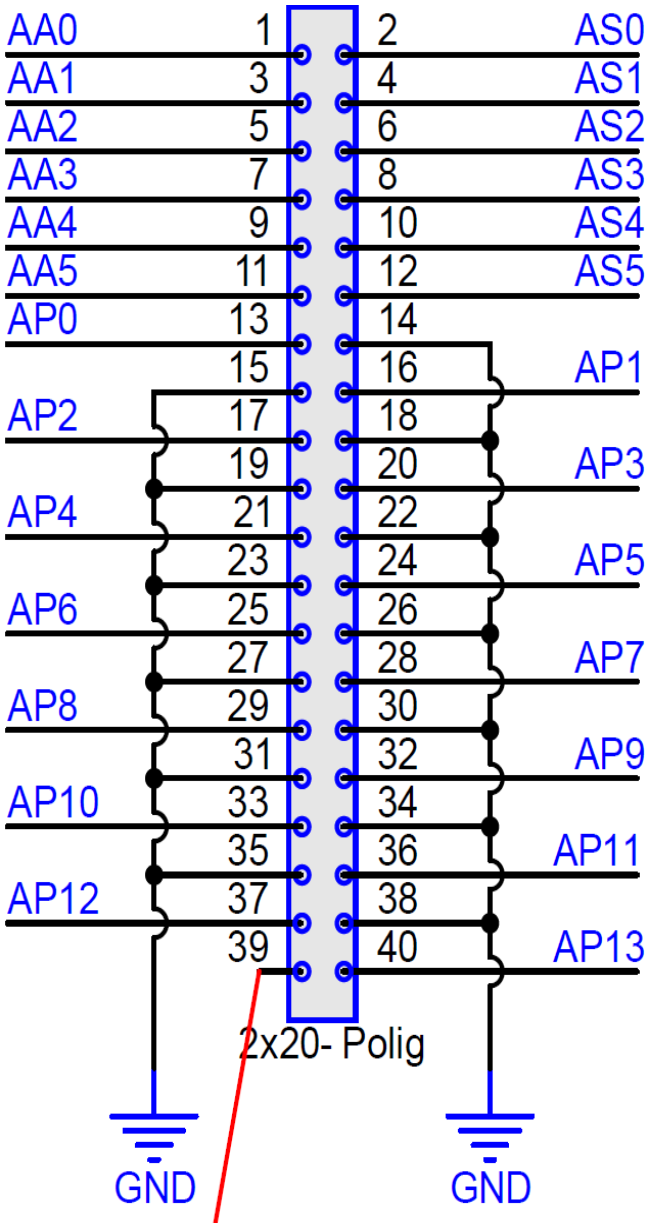

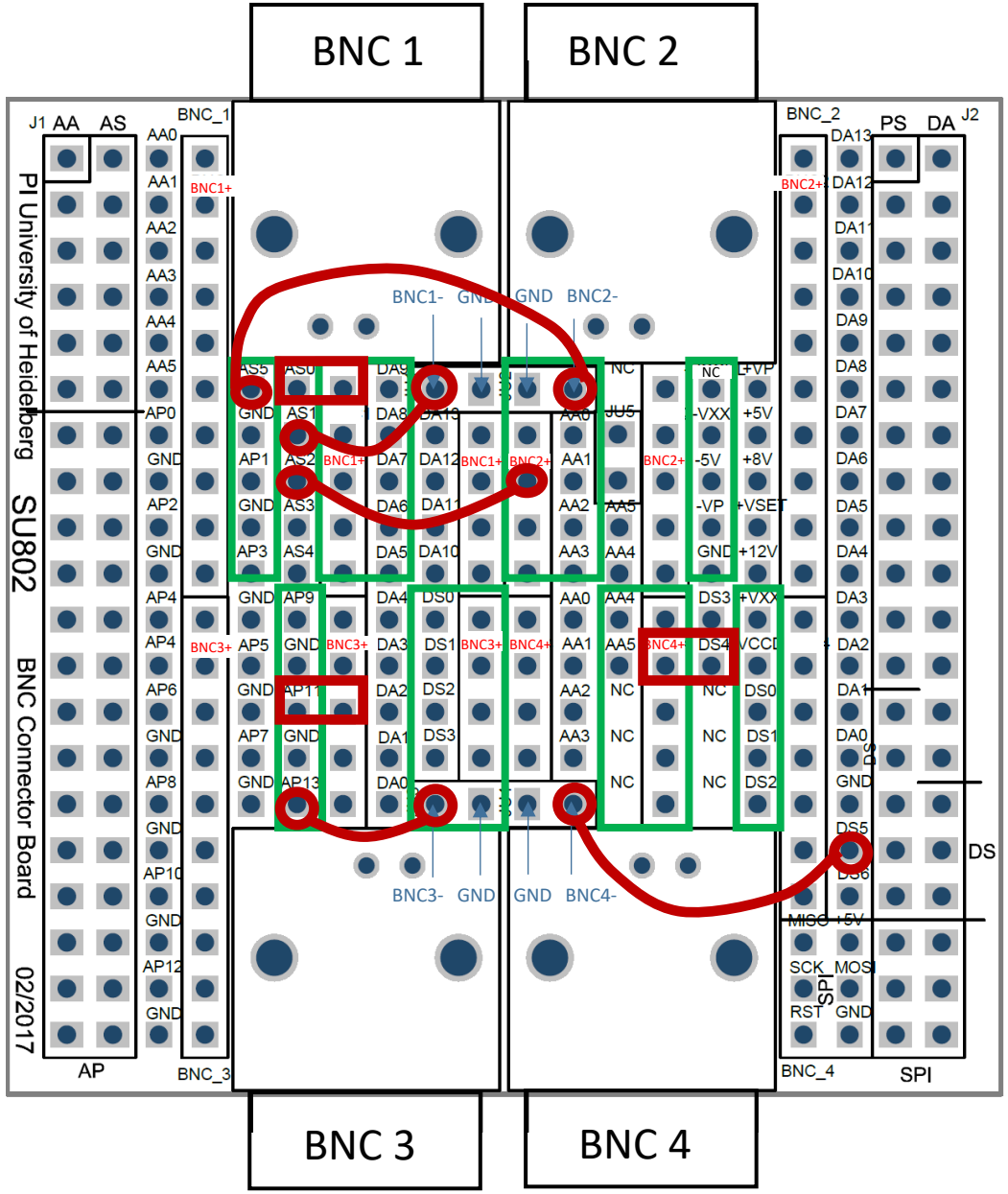

DL801 (DL800)

-VCC1	(-VCC_DL)	1	2	DA13
-VP2	(-VXX)	3	4	DA12
-5V		5	6	DA11
-VP1	(-Vp)	7	8	DA10
GND		9	10	DA9
+VP		11	12	DA8
+5V		13	14	DA7
+VCC2	(+8V)	15	16	DA6
+VSET1	(Vset)	17	18	DA5
+12V		19	20	DA4
+VSET2	(+VXX)	21	22	DA3
+VCC1		23	24	DA2
DS0/REF		25	26	DA1
DS1/+3,3V		27	28	DA0
DS2		29	30	GND
DS3		31	32	DS5
DS4		33	34	(DS6) -VCC2
SPI_MISO		35	36	+5V
SPI_SCK		37	38	SPI_MOSI
SPI_RST		39	40	GND

Default Values:

-VCC1:	-7V (-13V/-24V)
-VP2:	-2,7V
-VP1:	-6V
-VCC2:	-13V (-24V)
+VP: =	+VSET1
+VCC2:	+7V
+VSET1:	+6V
+VSET2:	+18V
+VCC1:	+13V (+24V)

Q-CC001-5
Old Circuit

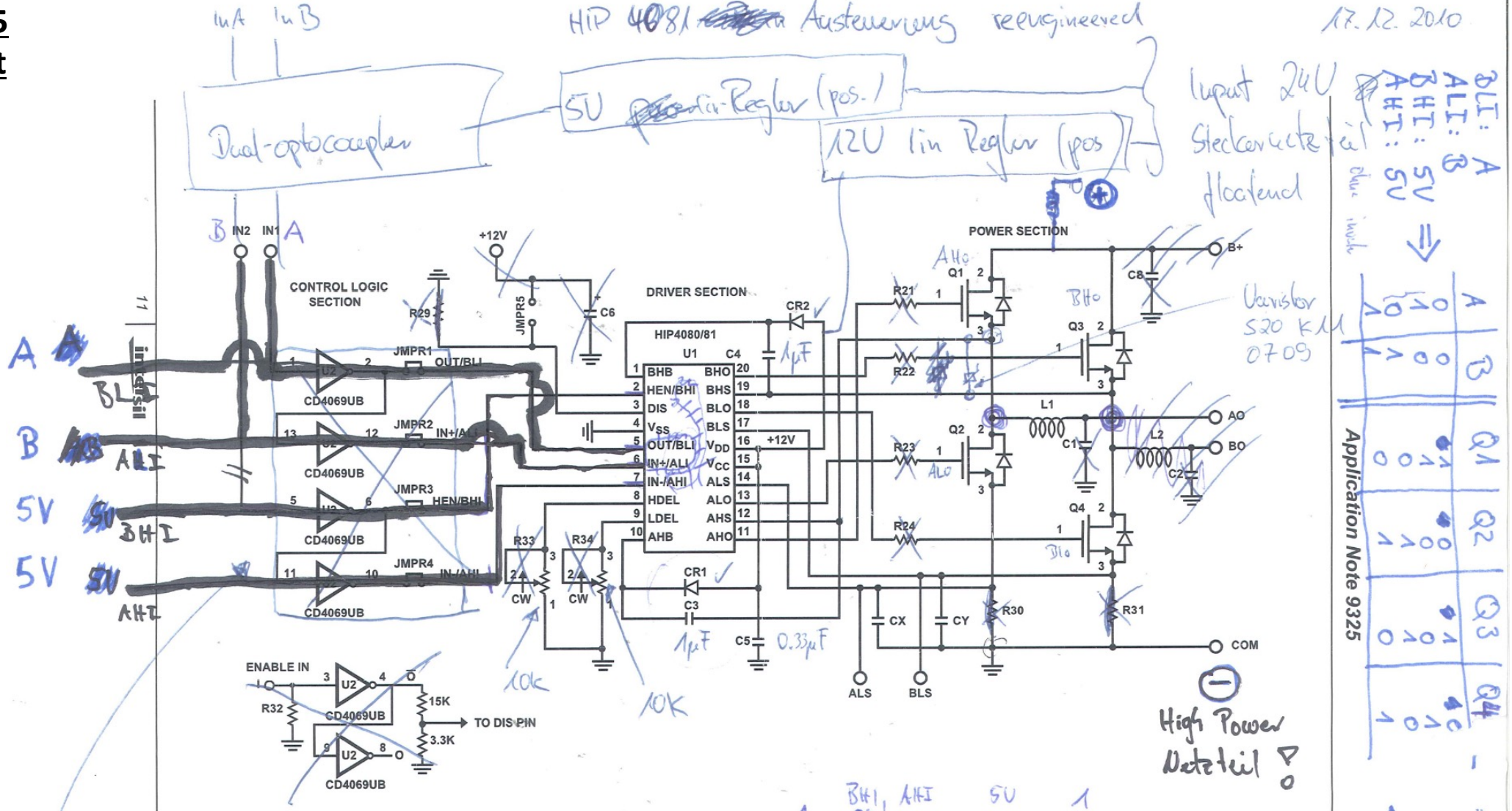

Q-CC001-5
Old Circuit

17.12.2010

BLI: A
ALI: B
BHI: 5V
AHI: 5V

A	B	Q1	Q2	Q3	Q4
0	0	1	0	1	0
1	0	1	0	0	1
0	1	0	1	1	0
1	1	0	1	0	1

Application Note 9325

Input Logic table

(06.02.2013)

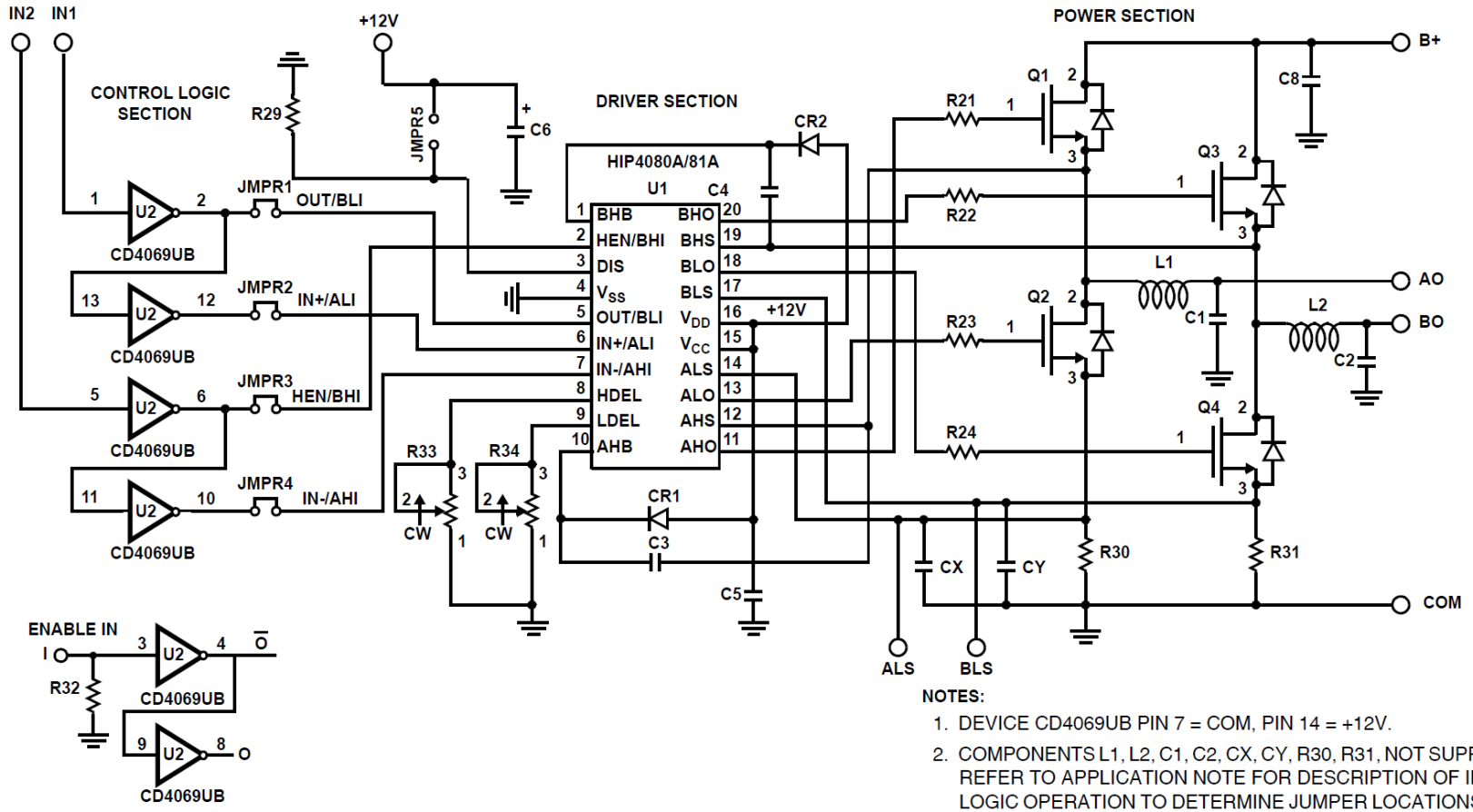

NOTES:

1. DEVICE CD4069UB PIN 7 = COM, PIN 14 = +12V.
2. COMPONENTS L1, L2, C1, C2, CX, CY, R30, R31, NOT SUPPLIED. REFER TO APPLICATION NOTE FOR DESCRIPTION OF INPUT LOGIC OPERATION TO DETERMINE JUMPER LOCATIONS FOR JMPR1 - JMPR4.

Q-CC001-5 → SU813 Bug fixes:

1) Update Jumper JU6 connections

OLD:

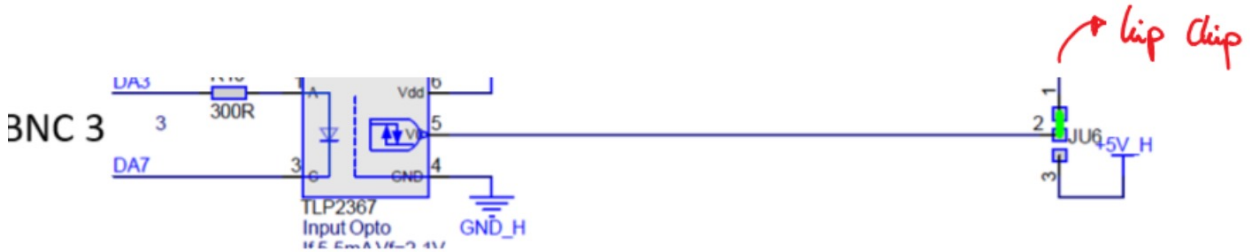

NEW: opto

2) Use the right pin assignment

e-lego connector definitions

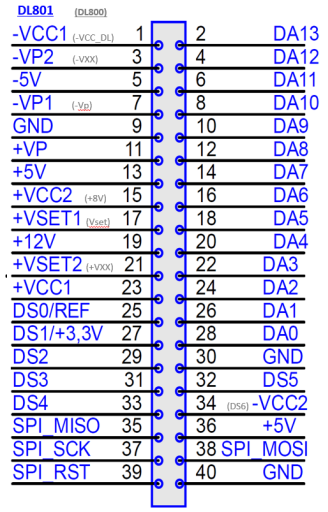

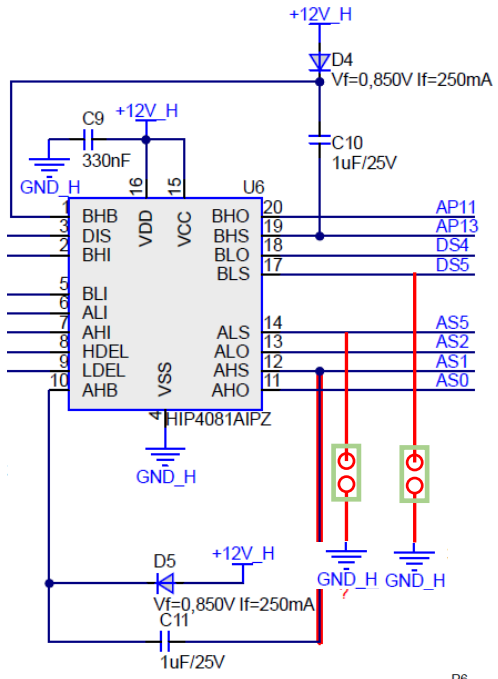

3) ALS and BLS: zero Ohm Resistor
to ground (Standard: 0 Ohm Resistor soldered)

4) Inverter with jumper option: BLI=Invert(ALI)
e.g. SN74LVC1G04

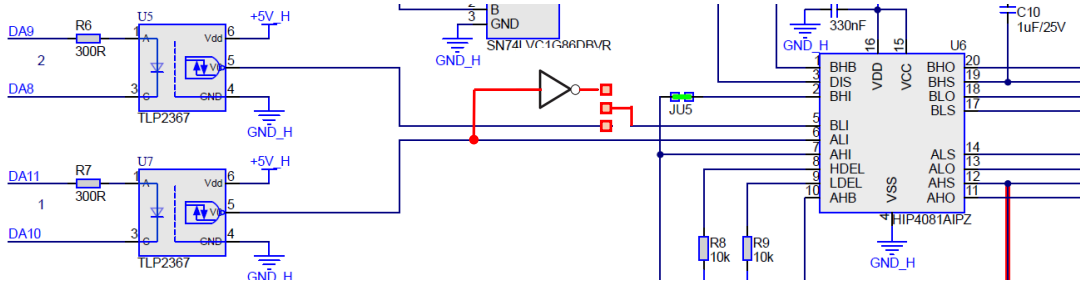

Q-CC001-5 → SU813 H-bridge Driver (faulty Version)

Schematic driver

Inputs						
	label	Opto		elego		pin
	ALI	Opto1	+	BNC 1	+	DA11
			-		-	DA10
	BLI	Opto2	+	BNC 2	+	DA9
			-		-	DA8
	AHI/BHI	Opto3	+	BNC 3	+	DA3
			-		-	DA7
	DIS	Opto4	+	BNC 4	+	DA2
			-		-	DA4

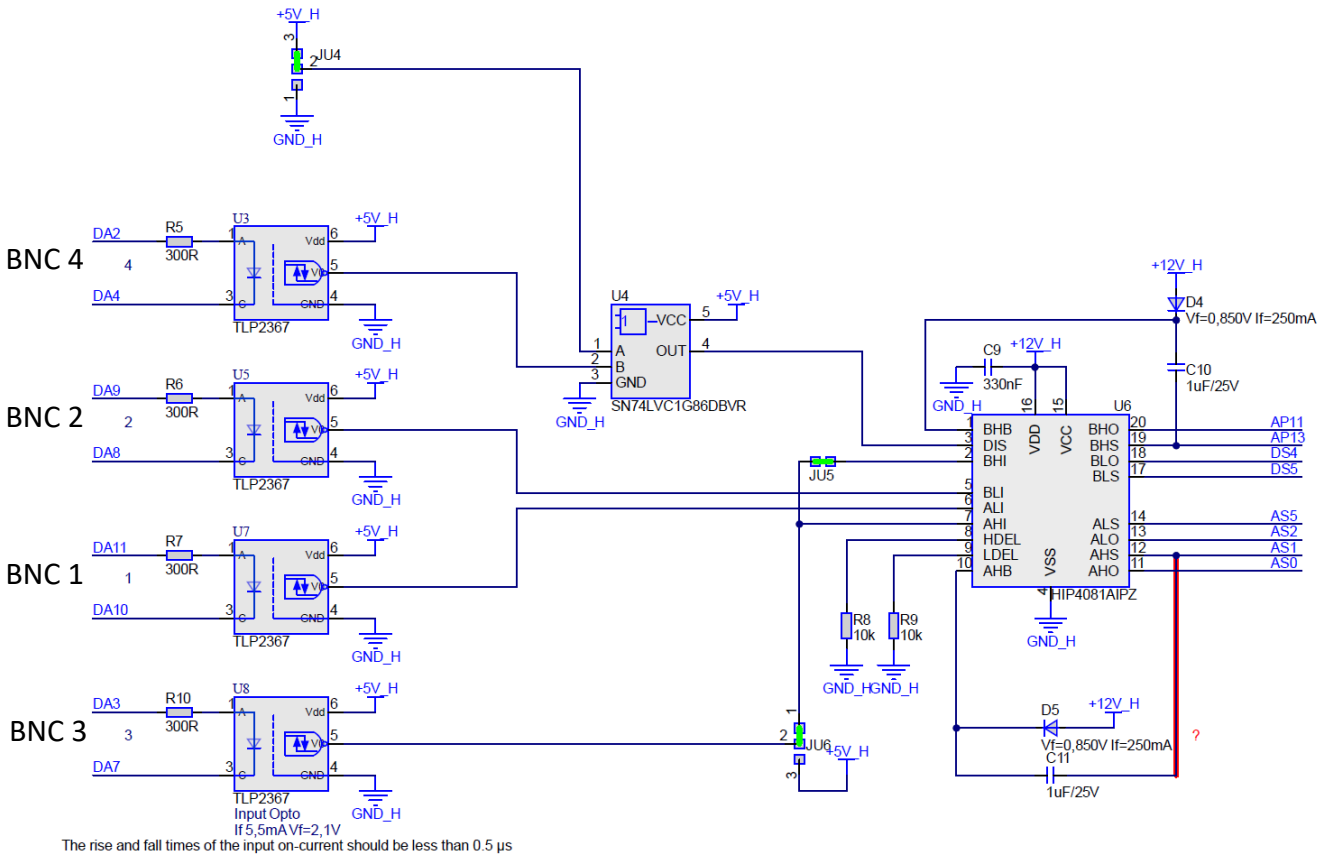

Outputs						
HIP pin	label	FET		elego		pin
11	AHO	Q1	Gate	BNC 1	+	AS0
12	AHS		Source		-	AS1
20	BHO	Q3	Gate	BNC 3	+	AP11
19	BHS		Source		-	AP13
13	ALO	Q2	Gate	BNC 2	+	AS2
14	ALS		Source		-	AS5
18	BLO	Q4	Gate	BNC 4	+	DS4
17	BLS		Source		-	DS5

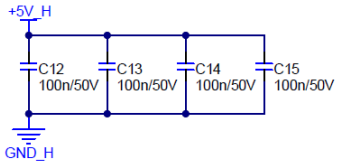

default Jumper setting

Opto

XOR

Hip

6.1. Truth Table

Input	LED	Output
H	ON	L
L	OFF	H

Table 1. Function Table

INPUTS A	INPUTS B	OUTPUT Y
L	L	L
L	H	H
H	L	H
H	H	L

TRUTH TABLE

INPUT				OUTPUT	
ALI, BLI	AHI, BHI	U/V	DIS	ALO, BLO	AHO, BHO
X	X	X	1	0	0
1	X	0	0	1	0
0	1	0	0	0	1
0	0	0	0	0	0
X	X	1	X	0	0

NOTE: X signifies that input can be either a "1" or "0".

Q-CC001-5 →

Connectors on SU813 H-bridge driver

Wrong pin assignement

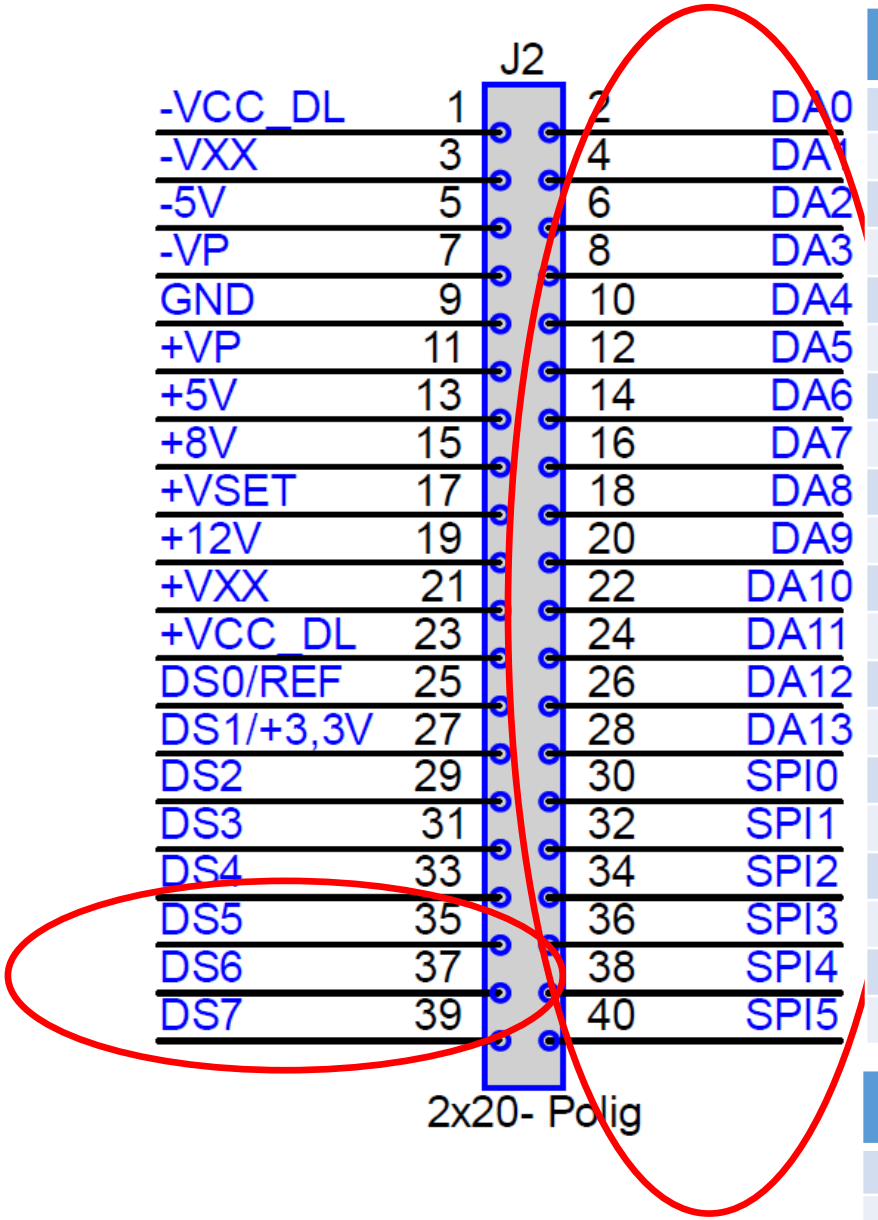

SU813w	e-lego
DA0	DA13
DA1	DA12
DA2	DA11
DA3	DA10
DA4	DA9
DA5	DA8
DA6	DA7
DA7	DA6
DA8	DA5
DA9	DA4
DA10	DA3
DA11	DA2
DA12	DA1
DA13	DA0
SPI0	GND
SPI1	DS5
SPI2	-Vcc2
SPI3	+5V
SPI4	SPI_MOSI
SPI5	GND

SU813w	e-lego
DS5	SPI_MISO
DS6	SPI_SCK
DA7	SPI_RST

e-lego connector definitions

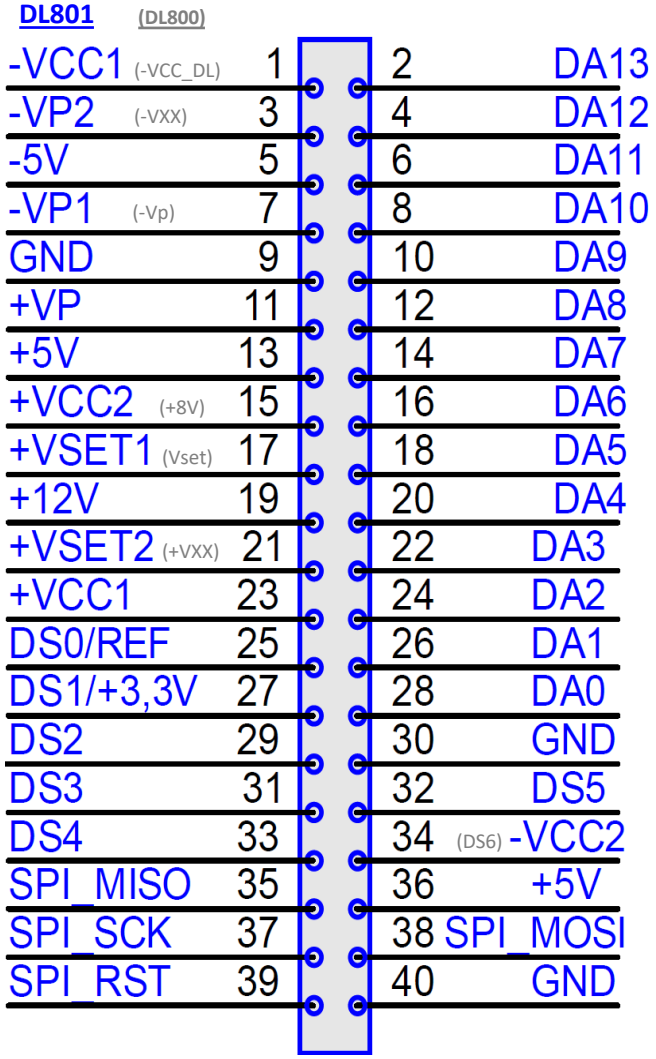

Default Values:

-VCC1:	-7V (-13V/-24V)
-VP2:	-2,7V
-VP1:	-6V
-VCC2:	-13V (-24V)
+VP: =	+VSET1
+VCC2:	+7V
+VSET1:	+6V
+VSET2:	+18V
+VCC1:	+13V (+24V)

Q-CC001-5 connection table - modified for wrong pin assignment

Outputs							
HIP pin	**label**	**FET**		**elego**		**pin**	**SU813w**
11	AHO	Q1	Gate	BNC 1	+	**AS0**	
12	AHS		Source		-	**AS1**	
20	BHO	Q3	Gate	BNC 3	+	**AP11**	
19	BHS		Source		-	**AP13**	
13	ALO	Q2	Gate	BNC 2	+	**AS2**	
14	ALS		Source		-	**AS5**	
18	BLO	Q4	Gate	BNC 4	+	**DS4**	
17	BLS		Source		-	DS5	**SPI_MISO**
Inputs							
	label	**Opto**		**elego**		**pin**	
	ALI	Opto1	+	BNC 1	+	DA11	**DA2**
			-		-	DA10	**DA3**
	BLI	Opto2	+	BNC 2	+	DA9	**DA4**
			-		-	DA8	**DA5**
	AHI/BHI	Opto3	+	BNC 3	+	DA3	**DA10**
			-		-	DA7	**DA6**
	DIS	Opto4	+	BNC 4	+	DA2	**DA11**
			-		-	DA4	**DA9**

SU813w	e-lego
DA0	DA13
DA1	DA12
DA2	**DA11**
DA3	**DA10**
DA4	**DA9**
DA5	DA8
DA6	DA7
DA7	**DA6**
DA8	**DA5**
DA9	**DA4**
DA10	**DA3**
DA11	**DA2**
DA12	DA1
DA13	DA0
SPI0	GND
SPI1	DS5
SPI2	-Vcc2
SPI3	+5V
SPI4	SPI_MOSI
SPI5	GND

SU813w	e-lego
DS5	**SPI_MISO**
DS6	SPI_SCK
DA7	SPI_RST

Q-CC001-5

BNC Inputs - modified for wrong pin assignment

Outputs							
HIP pin	**label**	**FET**		**elego**		**pin**	**SU813w**
11	AHO	Q1	Gate	BNC 1	+	AS0	
12	AHS		Source		-	AS1	
20	BHO	Q3	Gate	BNC 3	+	AP11	
19	BHS		Source		-	AP13	
13	ALO	Q2	Gate	BNC 2	+	AS2	
14	ALS		Source		-	AS5	
18	BLO	Q4	Gate	BNC 4	+	DS4	
17	BLS		Source		-		SPI_MISO

Inputs							
	label	**Opto**		**elego**		**pin**	
	ALI	Opto1	+	BNC 1	+		DA2
			-		-		DA3
	BLI	Opto2	+	BNC 2	+		DA4
			-		-		DA5
	AHI/BHI	Opto3	+	BNC 3	+		DA10
			-		-		DA6
	DIS	Opto4	+	BNC 4	+		DA11
			-		-		DA9

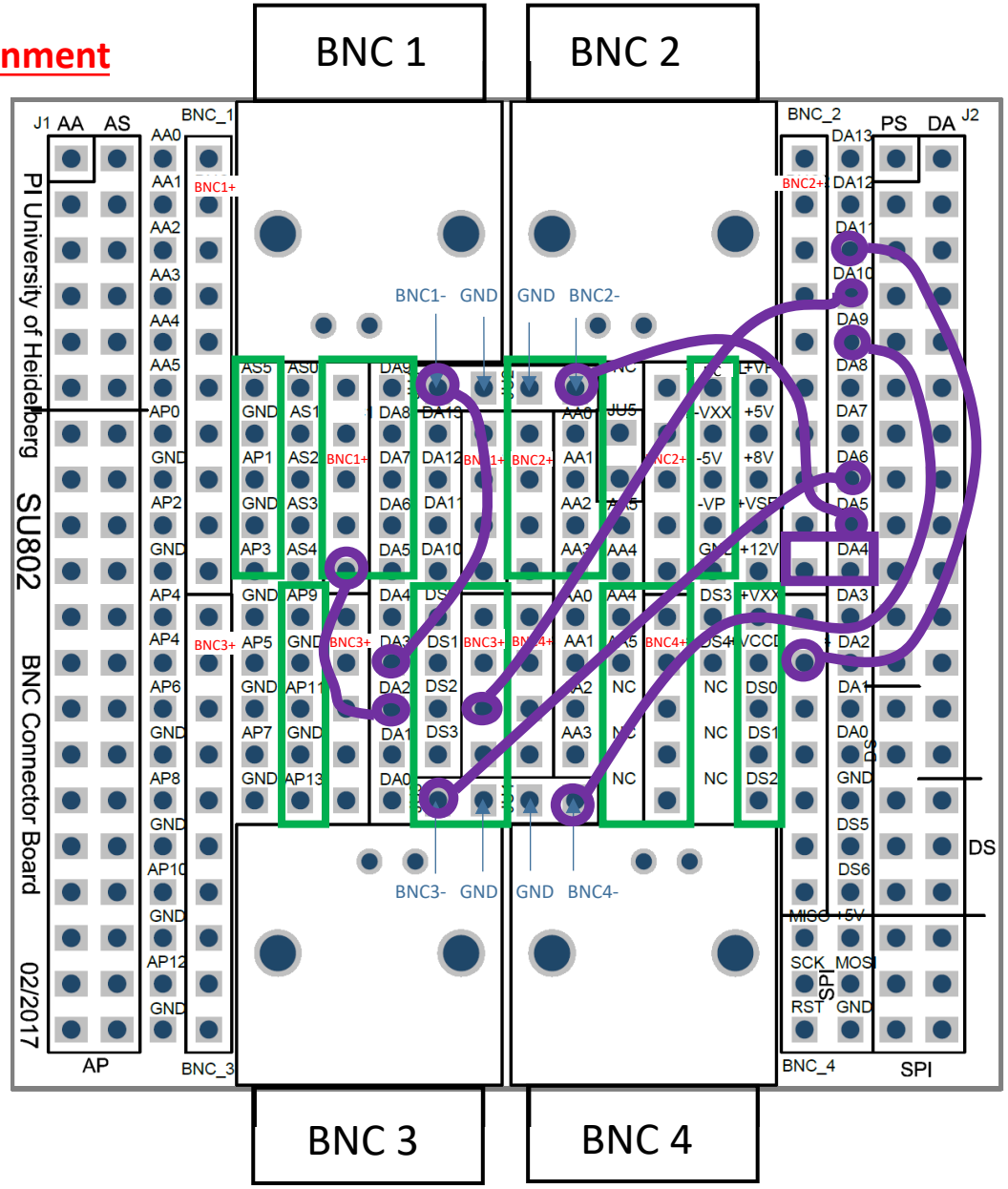

DL801 (DL800)

-VCC1	(-VCC_DL)	1	2		DA13
-VP2	(-VXX)	3	4		DA12
-5V		5	6		DA11
-VP1	(-Vp)	7	8		DA10
GND		9	10		DA9
+VP		11	12		DA8
+5V		13	14		DA7
+VCC2	(+8V)	15	16		DA6
+VSET1	(Vset)	17	18		DA5
+12V		19	20		DA4
+VSET2	(+VXX)	21	22		DA3
+VCC1		23	24		DA2
DS0/REF		25	26		DA1
DS1/+3,3V		27	28		DA0
DS2		29	30		GND
DS3		31	32		DS5
DS4		33	34	(DS6)	-VCC2
SPI_MISO		35	36		+5V
SPI_SCK		37	38		SPI_MOSI
SPI_RST		39	40		GND

Default Values:

-VCC1:	-7V (-13V/-24V)
-VP2:	-2,7V
-VP1:	-6V
-VCC2:	-13V (-24V)
+VP: =	+VSET1
+VCC2:	+7V
+VSET1:	+6V
+VSET2:	+18V
+VCC1:	+13V (+24V)

Q-CC001-5

BNC Output - modified for wrong pin assignment

Outputs							
HIP pin	**label**	**FET**		**elego**		**pin**	**SU813w**
11	AHO	Q1	Gate	BNC 1	+	AS0	
12	AHS		Source		-	AS1	
20	BHO	Q3	Gate	BNC 3	+	AP11	
19	BHS		Source		-	AP13	
13	ALO	Q2	Gate	BNC 2	+	AS2	
14	ALS		Source		-	AS5	
18	BLO	Q4	Gate	BNC 4	+	DS4	
17	BLS		Source		-		SPI_MISO

Inputs							
	label	**Opto**		**elego**		**pin**	
	ALI	Opto1	+	BNC 1	+		DA2
			-		-		DA3
	BLI	Opto2	+	BNC 2	+		DA4
			-		-		DA5
	AHI/BHI	Opto3	+	BNC 3	+		DA10
			-		-		DA6
	DIS	Opto4	+	BNC 4	+		DA11
			-		-		DA9

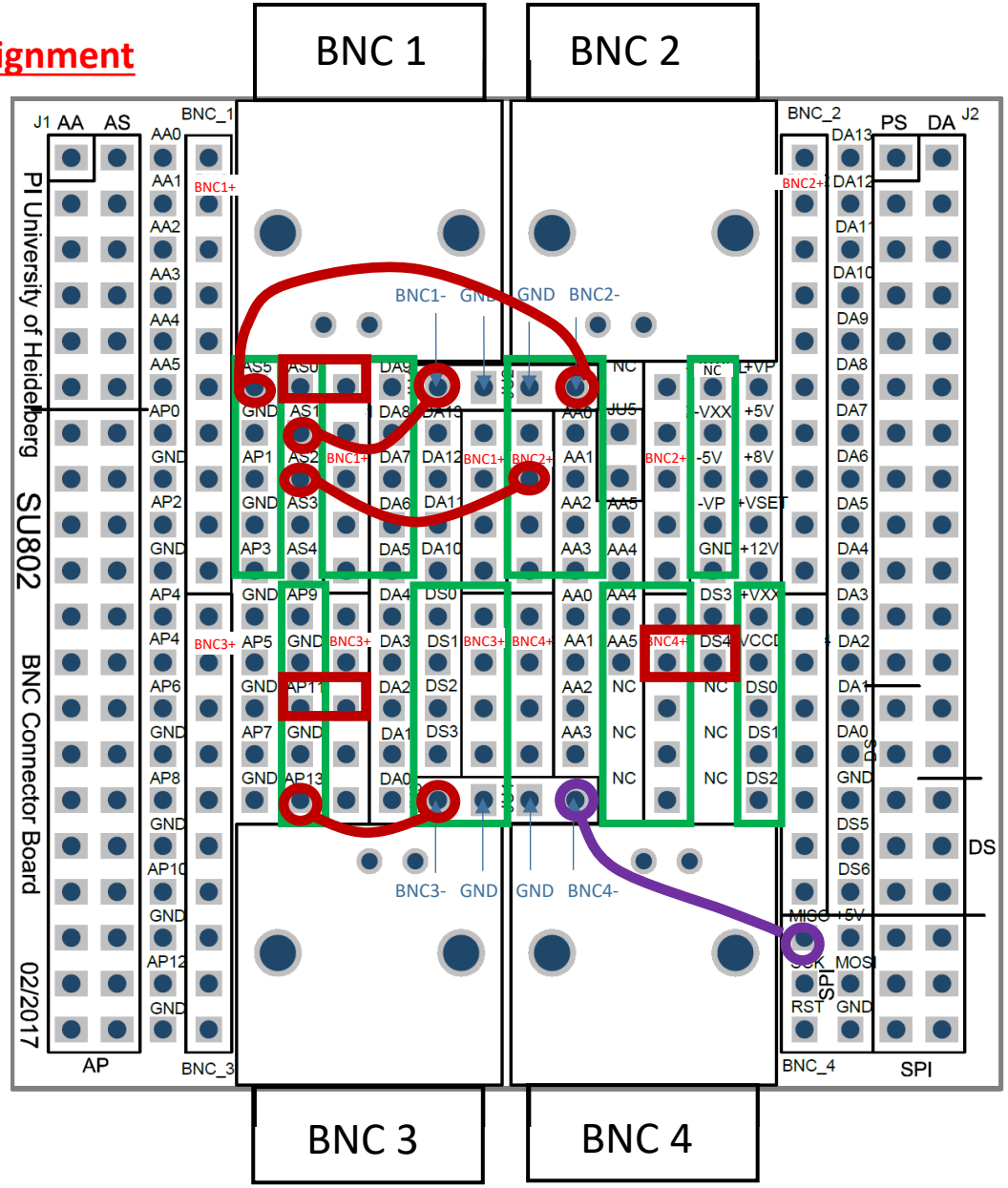

DL801 (DL800)

-VCC1	(-VCC_DL)	1	2		DA13
-VP2	(-VXX)	3	4		DA12
-5V		5	6		DA11
-VP1	(-Vp)	7	8		DA10
GND		9	10		DA9
+VP		11	12		DA8
+5V		13	14		DA7
+VCC2	(+8V)	15	16		DA6
+VSET1	(Vset)	17	18		DA5
+12V		19	20		DA4
+VSET2	(+VXX)	21	22		DA3
+VCC1		23	24		DA2
DS0/REF		25	26		DA1
DS1/+3,3V		27	28		DA0
DS2		29	30		GND
DS3		31	32		DS5
DS4		33	34	(DS6)	-VCC2
SPI_MISO		35	36		+5V
SPI_SCK		37	38		SPI_MOSI
SPI_RST		39	40		GND

Default Values:

-VCC1:	-7V (-13V/-24V)
-VP2:	-2,7V
-VP1:	-6V
-VCC2:	-13V (-24V)
+VP: =	+VSET1
+VCC2:	+7V
+VSET1:	+6V
+VSET2:	+18V
+VCC1:	+13V (+24V)

Q-CC007 - H-bridge eval board Jumper settings

Based on SU802 BNC Connector board

Board 1 for MOSFETS

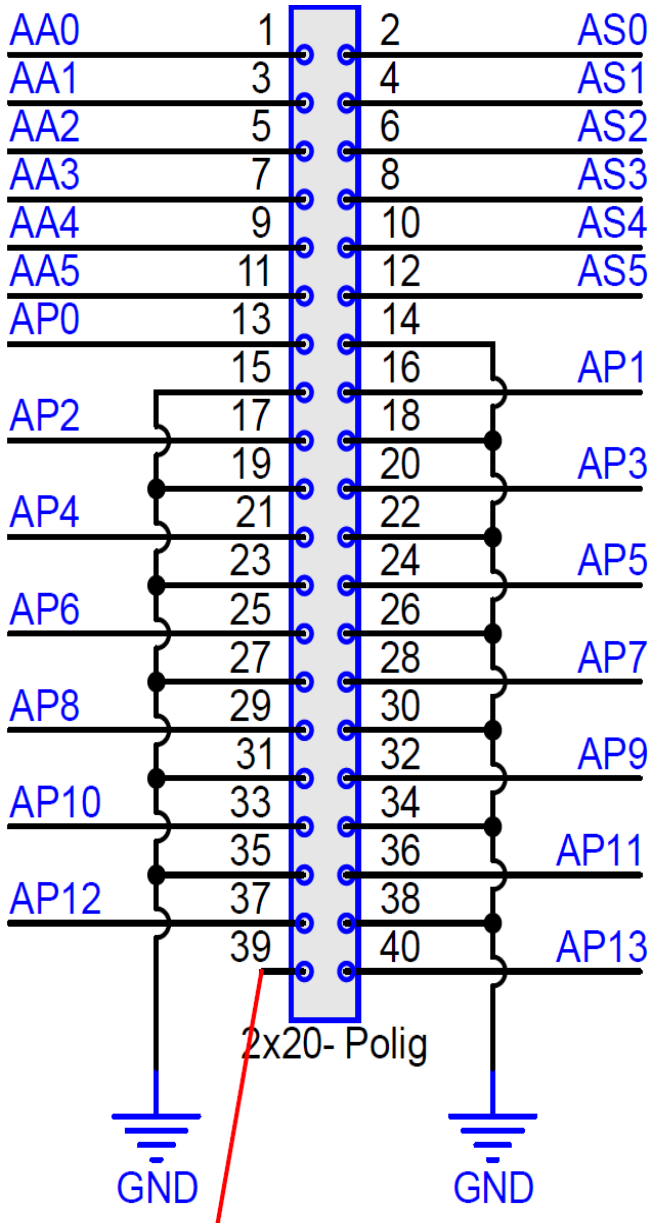

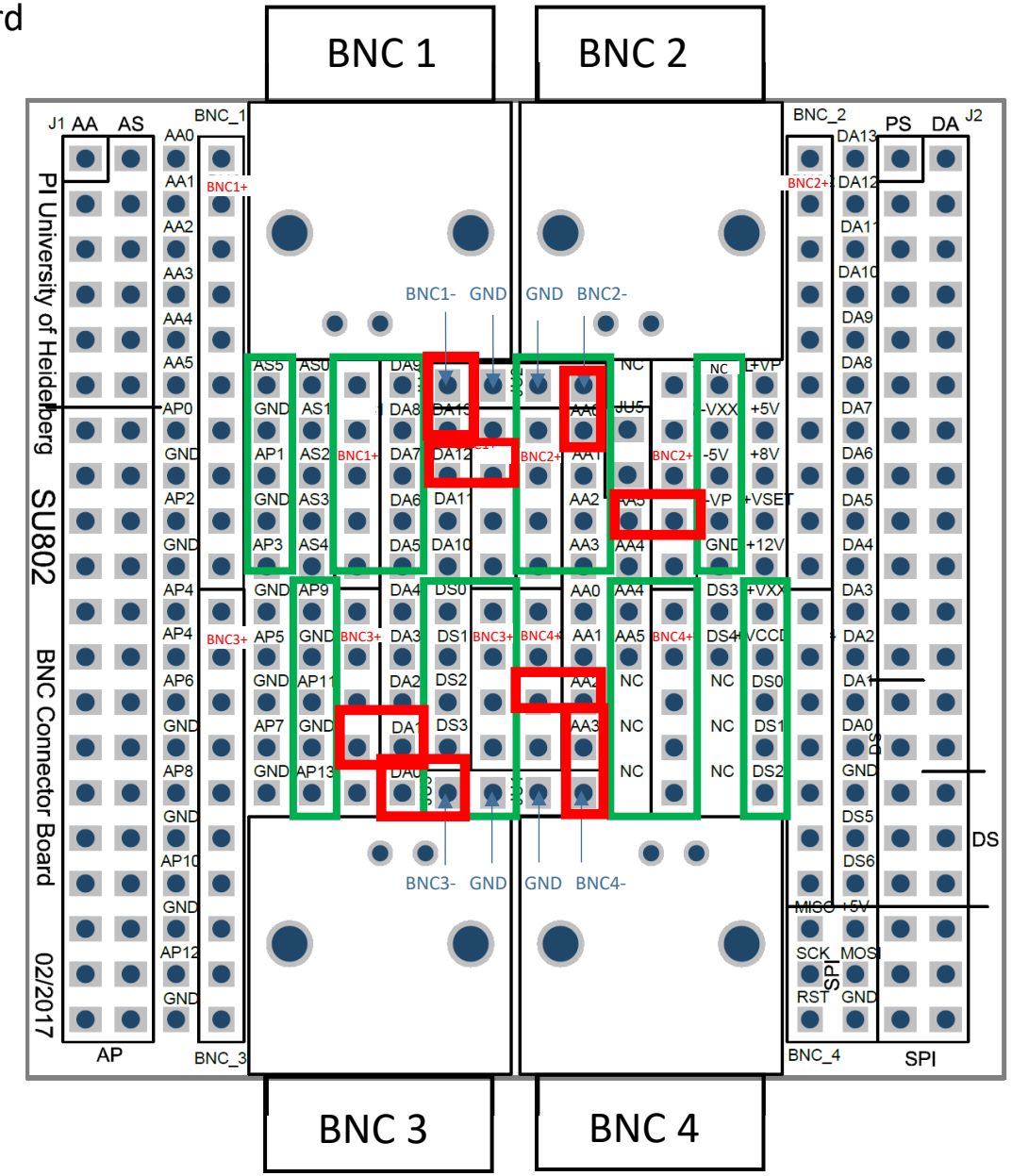

DL801 (DL800)

-VCC1 (-VCC_DL)	1	2	DA13
-VP2 (-VXX)	3	4	DA12
-5V	5	6	DA11
-VP1 (-Vp)	7	8	DA10
GND	9	10	DA9
+VP	11	12	DA8
+5V	13	14	DA7
+VCC2 (+8V)	15	16	DA6
+VSET1 (Vset)	17	18	DA5
+12V	19	20	DA4
+VSET2 (+VXX)	21	22	DA3
+VCC1	23	24	DA2
DS0/REF	25	26	DA1
DS1/+3,3V	27	28	DA0
DS2	29	30	GND
DS3	31	32	DS5
DS4	33	34 (DS6)	-VCC2
SPI_MISO	35	36	+5V
SPI_SCK	37	38	SPI_MOSI
SPI_RST	39	40	GND

Default Values:

-VCC1:	-7V (-13V/-24V)
-VP2:	-2,7V
-VP1:	-6V
-VCC2:	-13V (-24V)
+VP: =	+VSET1
+VCC2:	+7V
+VSET1:	+6V
+VSET2:	+18V
+VCC1:	+13V (+24V)

e-lego unit

Q-CC007 - H-bridge eval board Jumper settings

Based on SU802 BNC Connector board

Board 2 for Load Resistor and Power Supply

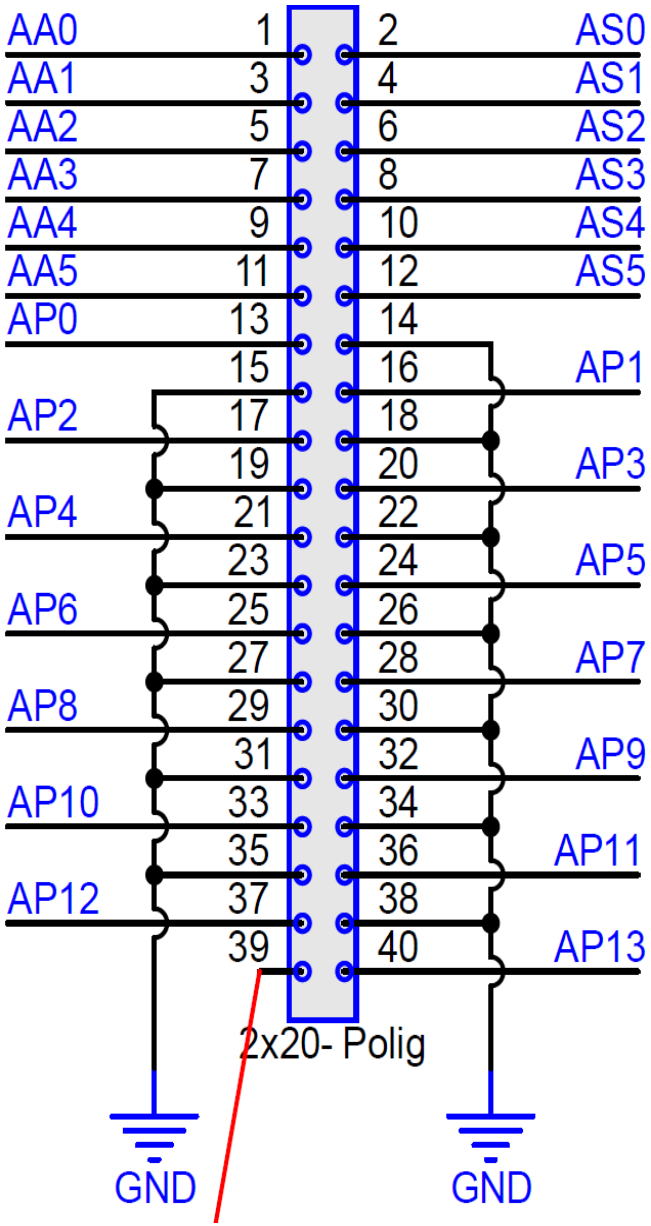

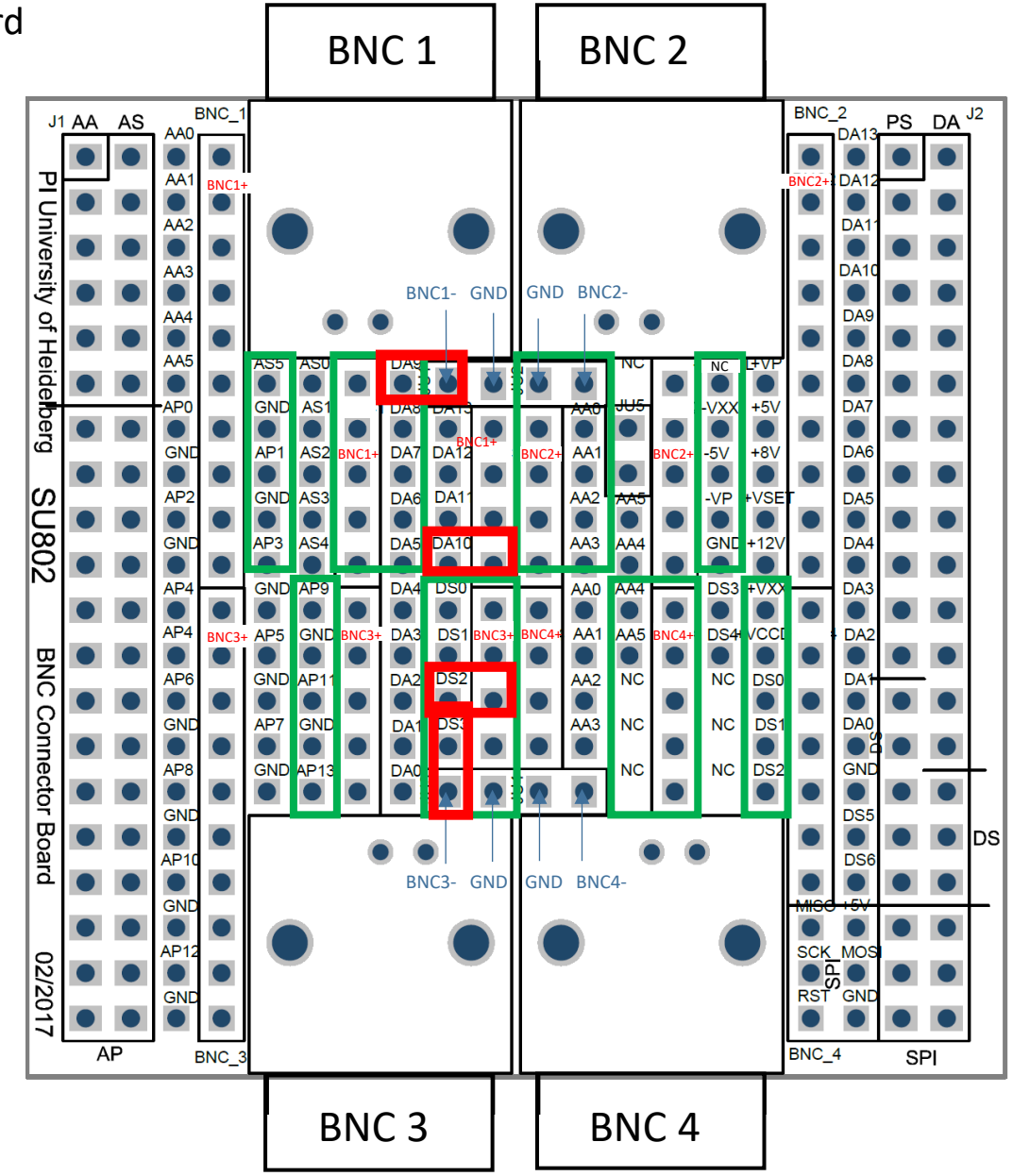

DL801 (DL800)

-VCC1 (-VCC_DL)	1	2	DA13	
-VP2 (-VXX)	3	4	DA12	
-5V	5	6	DA11	
-VP1 (-Vp)	7	8	DA10	
GND	9	10	DA9	
+VP	11	12	DA8	
+5V	13	14	DA7	
+VCC2 (+8V)	15	16	DA6	
+VSET1 (Vset)	17	18	DA5	
+12V	19	20	DA4	
+VSET2 (+VXX)	21	22	DA3	
+VCC1	23	24	DA2	
DS0/REF	25	26	DA1	
DS1/+3,3V	27	28	DA0	
DS2	29	30	GND	
DS3	31	32	DS5	
DS4	33	34	(DS6) -VCC2	
SPI_MISO	35	36	+5V	
SPI_SCK	37	38	SPI_MOSI	
SPI_RST	39	40	GND	

Default Values:

-VCC1:	-7V (-13V/-24V)
-VP2:	-2,7V
-VP1:	-6V
-VCC2:	-13V (-24V)
+VP: =	+VSET1
+VCC2:	+7V
+VSET1:	+6V
+VSET2:	+18V
+VCC1:	+13V (+24V)

H-bridge eval board Q-CC007
Configuration table for connecting BNC boards to Mosfest

BNC1	+	DA12	Q1	Gate
	-	DA13		Source
BNC2	+	AA5	Q2	G
	-	AA0		S
BNC3	+	DA1	Q3	G
	-	DA0		S
BNC4	+	AA2	Q4	G
	-	AA3		
BNC3 (board 2)	-	DS3	Resistor	R1
	+	DS2		R2
BNC1 (board2)	+	DA10	Power Supply	PS+
	-	DA9		PS-

Q-CC004-6 HQA LEM Prototype

e-lego unit

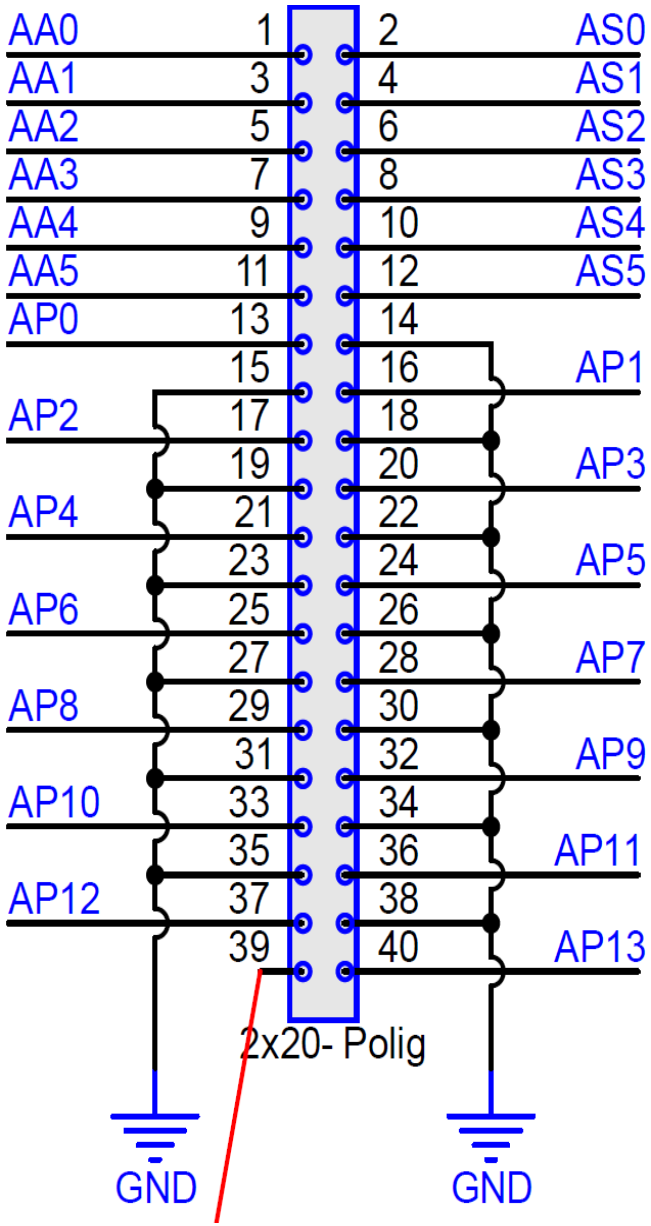

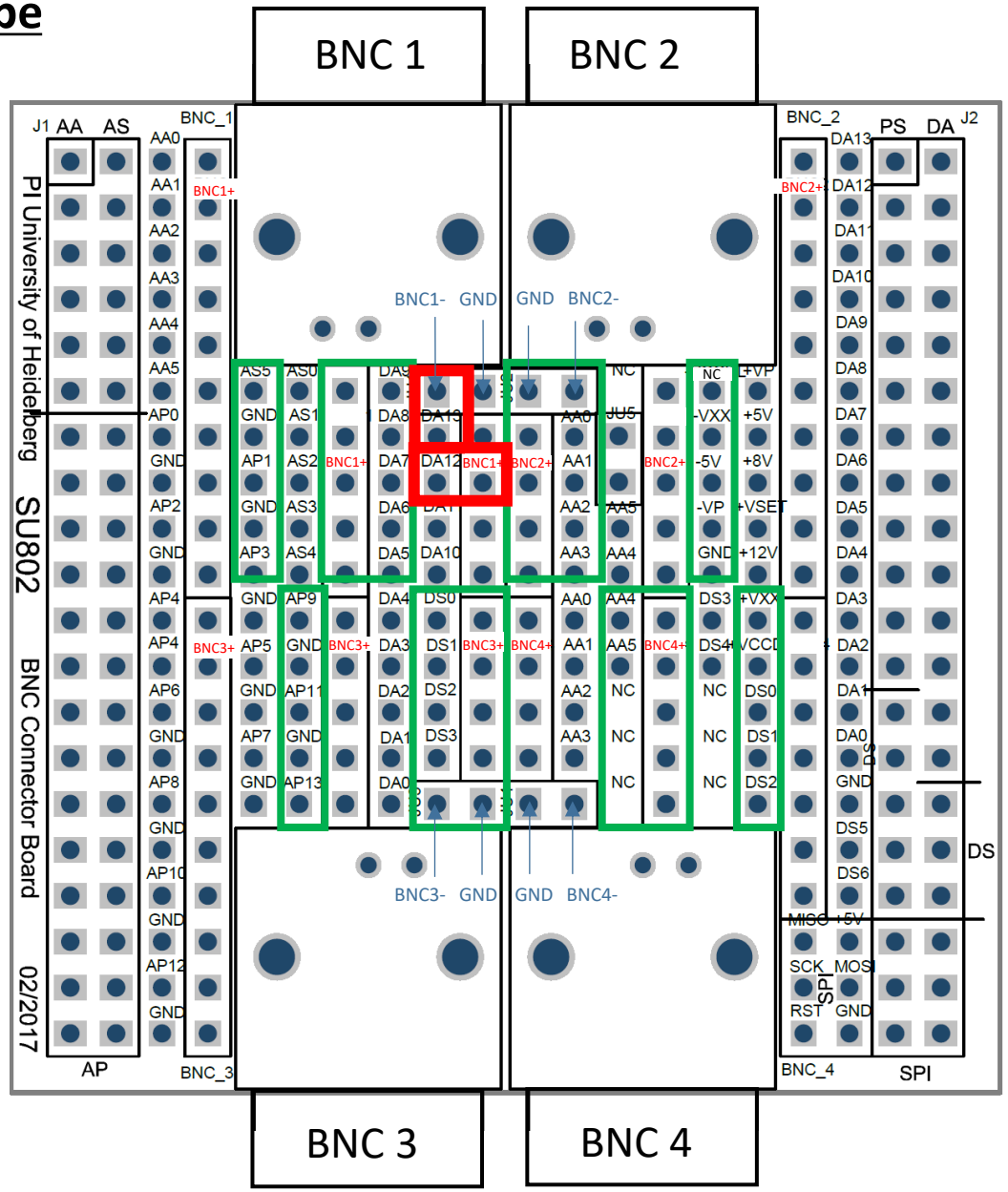

DL801 (DL800)

-VCC1 (-VCC_DL)	1	2	DA13
-VP2 (-VXX)	3	4	DA12
-5V	5	6	DA11
-VP1 (-Vp)	7	8	DA10
GND	9	10	DA9
+VP	11	12	DA8
+5V	13	14	DA7
+VCC2 (+8V)	15	16	DA6
+VSET1 (Vset)	17	18	DA5
+12V	19	20	DA4
+VSET2 (+VXX)	21	22	DA3
+VCC1	23	24	DA2
DS0/REF	25	26	DA1
DS1/+3,3V	27	28	DA0
DS2	29	30	GND
DS3	31	32	DS5
DS4	33	34 (DS6)	-VCC2
SPI_MISO	35	36	+5V
SPI_SCK	37	38	SPI_MOSI
SPI_RST	39	40	GND

Default Values:

-VCC1:	-7V (-13V/-24V)
-VP2:	-2,7V
-VP1:	-6V
-VCC2:	-13V (-24V)
+VP: =	+VSET1
+VCC2:	+7V
+VSET1:	+6V
+VSET2:	+18V
+VCC1:	+13V (+24V)

R_{Meas} - : DA13 BNC1-

R_{Meas} + : DA12 BNC1+

Q-CC004-6 HQA LEM Prototype

Analog

A-Arduino
connected to µC ADC

AIO-Standard

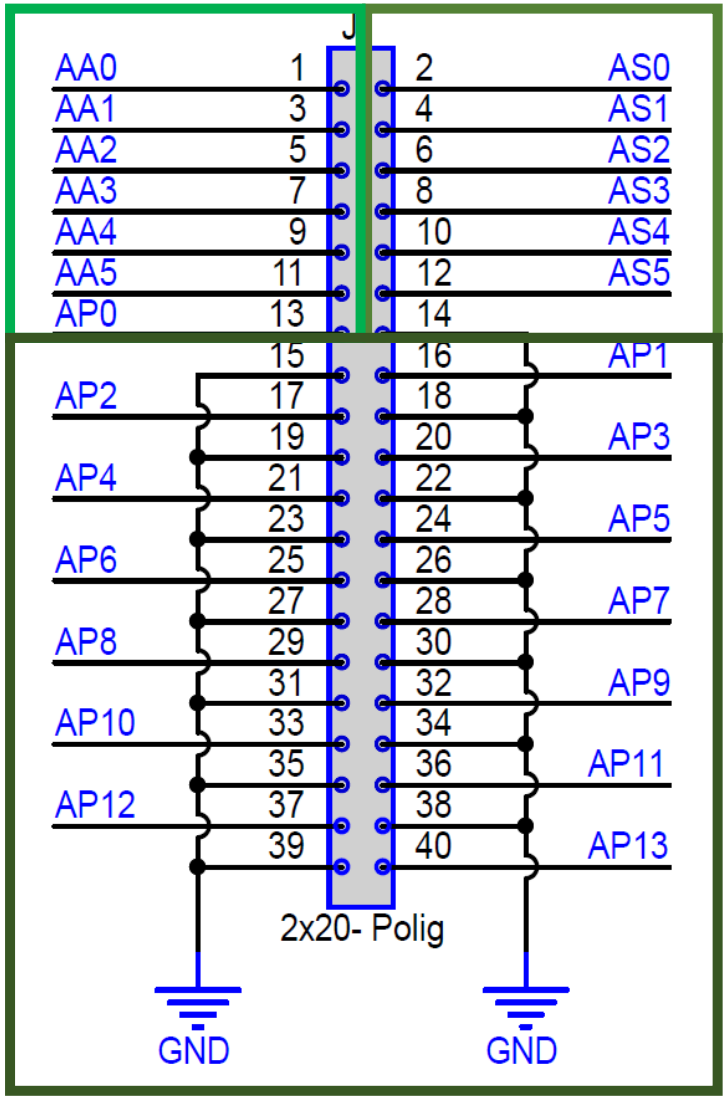

AIO-Precission
shielded by surrounding ground pins

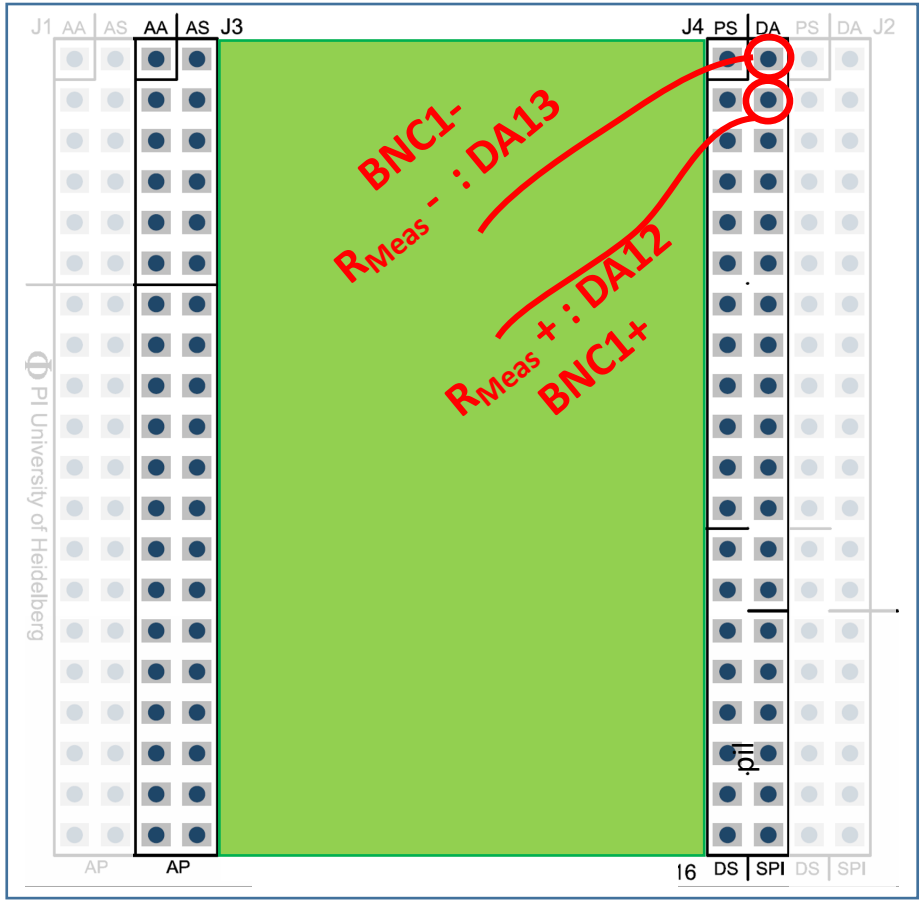

duplicates

Two double-rows of pin:

Accessable on each board

For interconnecting the modules

Power + Digital

Supply Voltages

DIO-Arduino
connected to µC DIO

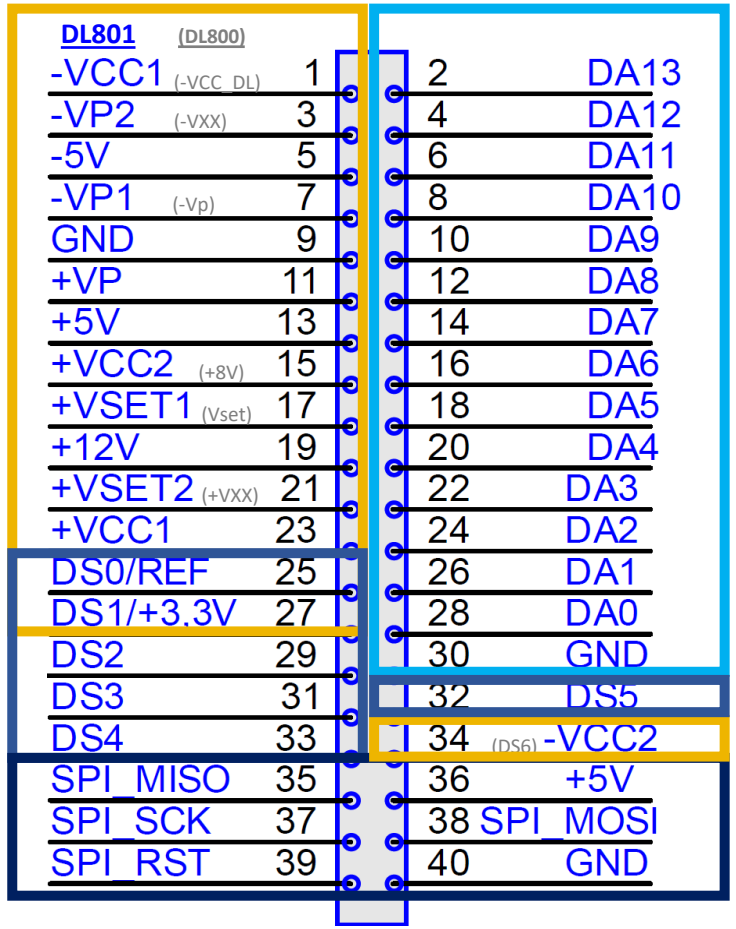

DIO - Standard

SPI
connected to µC SPI

Default Values:

-VCC1:	-7V (-13V/-24V)
-VP2:	-2,7V
-VP1:	-6V
-VCC2:	-13V (-24V)
+VP: =	+VSET1
+VCC2:	+7V
+VSET1:	+6V
+VSET2:	+18V
+VCC1:	+13V (+24V)

SU813 Notes production

- Check for the latest production version and check for additional notes on the workshop server

- Add Polarity Protection: Pin 39: Top: Block pin with solder. Bottom: Cut pin

- **Set standard jumper settings**

- Put PCBs into Aluminium case. Drawings of the cases can be found here:
  \\pi2\microcontroller\QD-Ultracold\Q-El - e-lego\Cases and Heatsink Needed: **To be determined**

- Label the finished boxes with the Part-number SU813
- **Label the power input : „15V“**

- Add some notes to the workshop server if there has been some modifications to the previous production version

- If not available yet, make pictures of the produced component an put them on the workshop server

Design rules for e-lego Boards:

- Aktuellestes Template verwenden (Gunnar fragen: DL801+Duplikat Pinleiste)
- Immer die Duplikatpinleiste bestehen lassen. Bitte vorher absprechen, falls Platzmangel herrscht und Teile davon entfernt werden müssen
- Jumper Rastermaß 2 mm standarmässig verwenden (Gunner fragen)
- Falls für Spannungsversorgung Hohlstecker verwendet, gleiche Position wie bei SU803
- Auf Beschriftungsdruck bei Spannungsauswahlsleiste die Spannungen angeben
- Auf Beschriftungsdruck Jumper Pin 1 markieren mit einem Punkt
- Standard Jumper settings markieren auf Schematic und Layout

High Speed Amplifier for fast E-field ramps

Black: new circuit
Green: existing circuit

2 versions:
- Possitive voltage ramps
- Negative voltage ramps

FET: STB45N40DM2AG
Gate Driver: UCC27512MDRSTEP

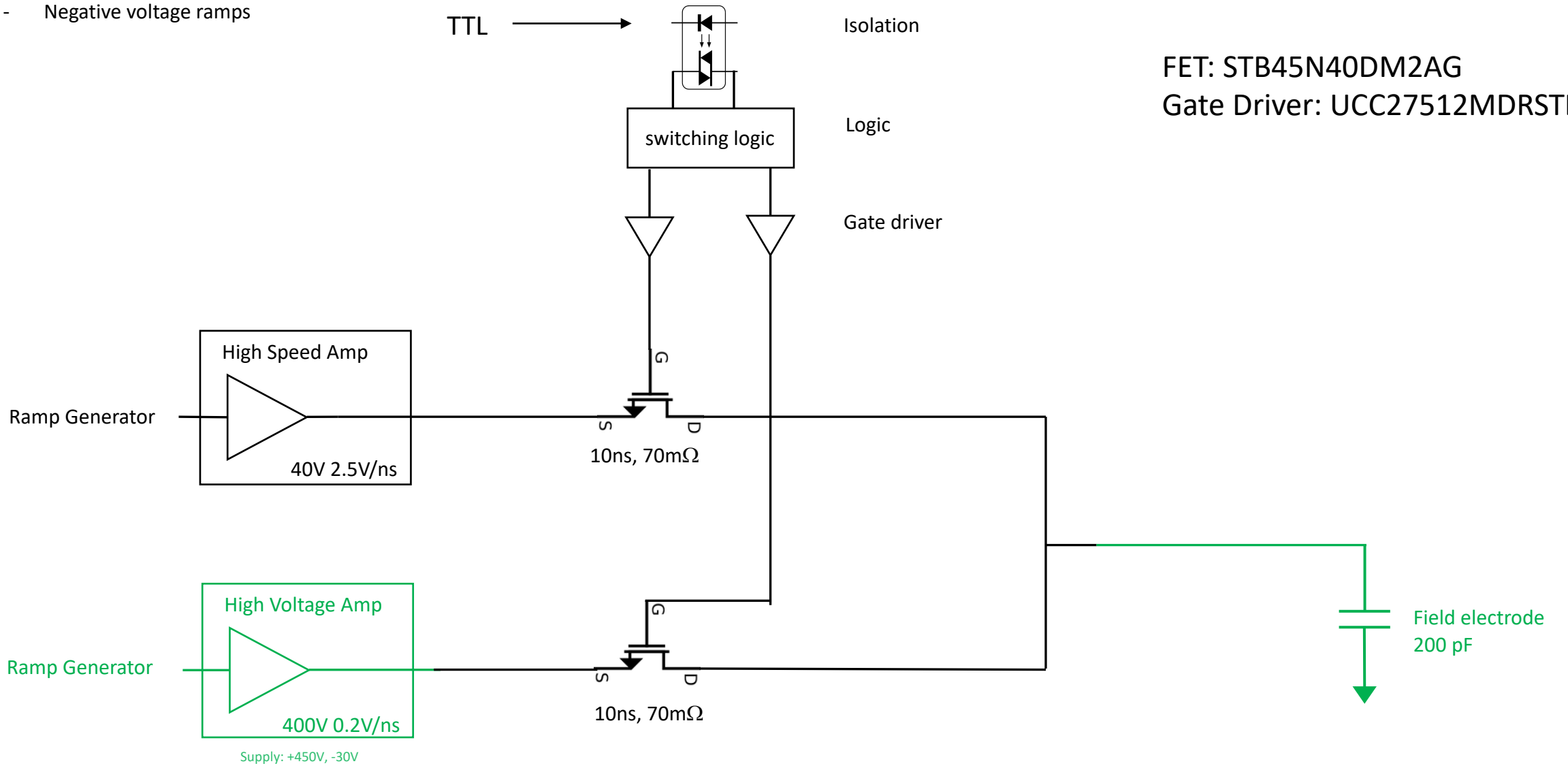

High Speed Amplifier for fast E-field ramps

- **Positive** voltage ramps

Blue: new unit
Green: existing unit

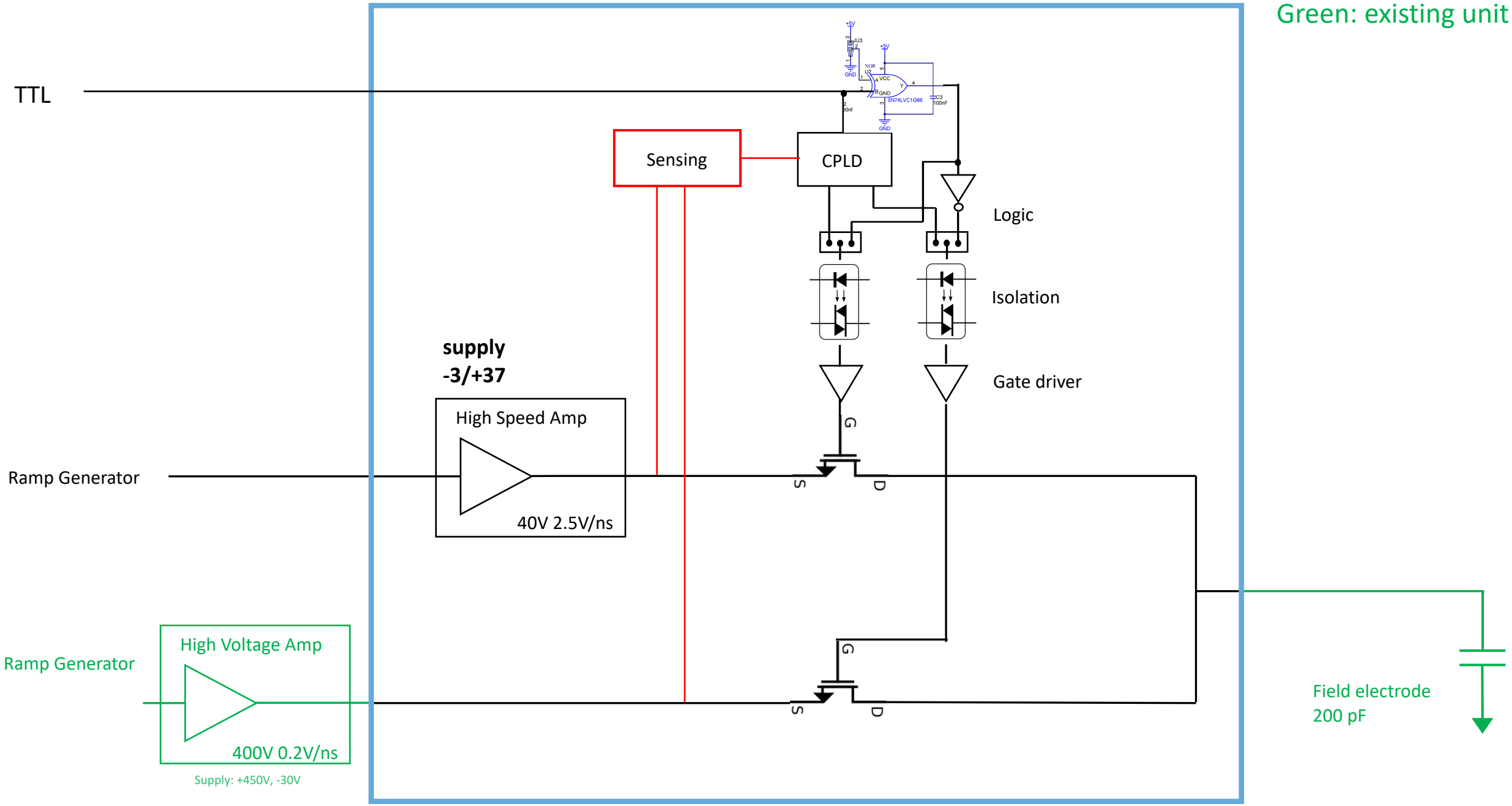

High Speed Amplifier for fast E-field ramps

- **Negative** voltage ramps

Blue: new circuit
Green: existing circuit

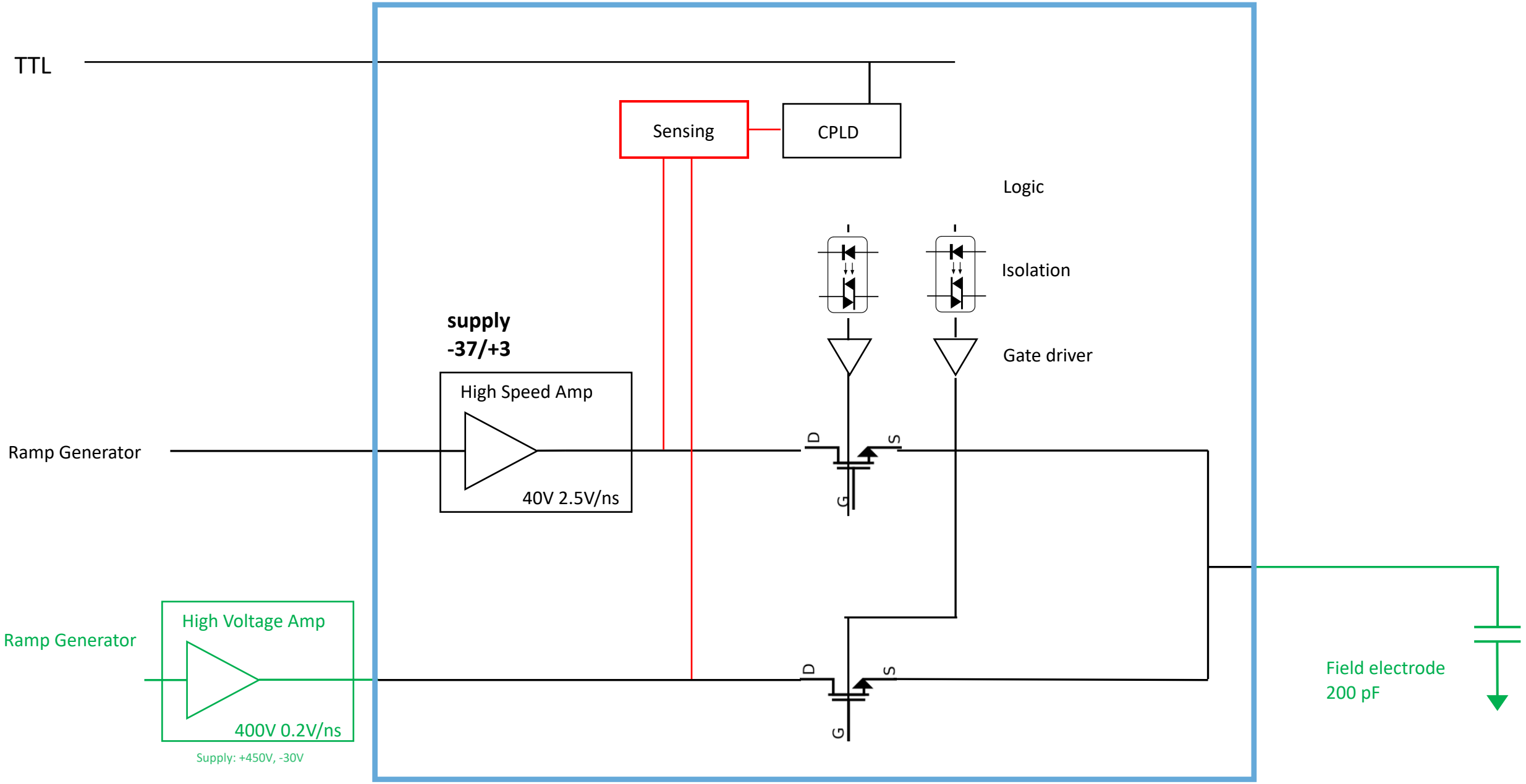

Voltage electrodes

(high speed)

HS ADA4870

Mosfet

STB 45N 40DM2AG (400V, Ø 63mΩ, rise time: 7 ns, fall time: 9 ns)

~~output capacitance: 180 pF~~

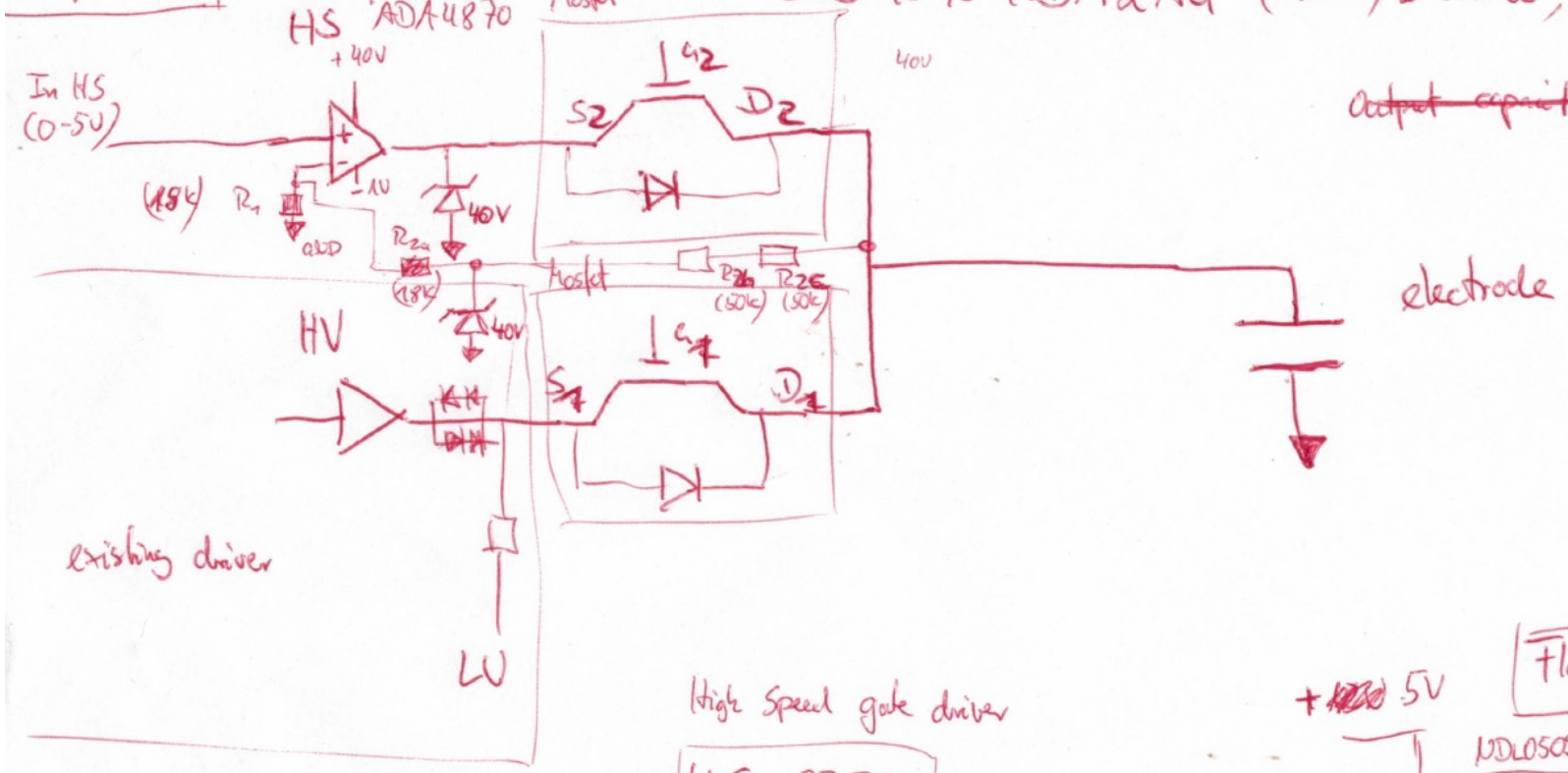

High Speed gate driver

UCC 27512

High side driver:

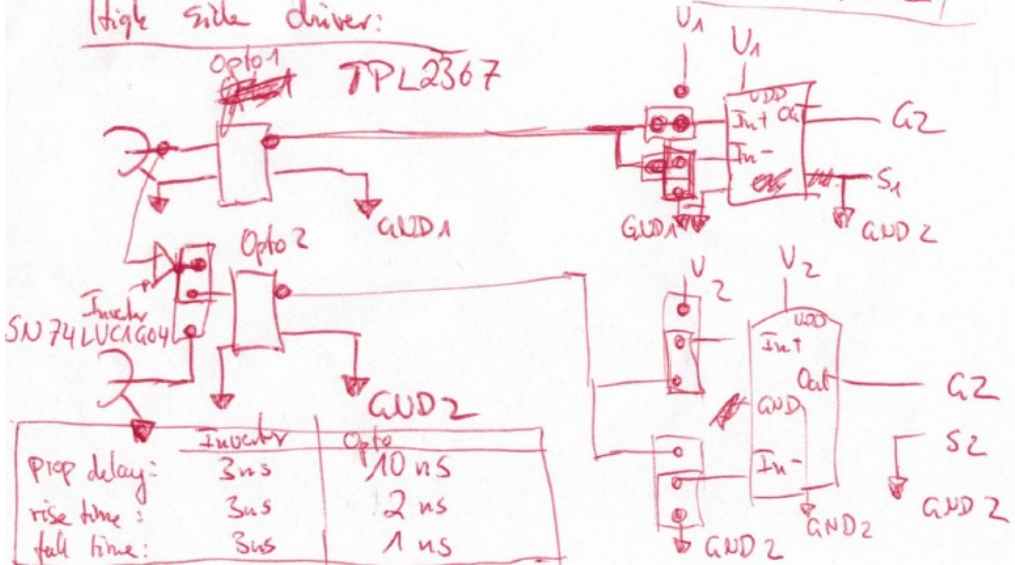

	Inverter	Opto
Prop delay:	3ns	10 ns
rise time:	3ns	2 ns
fall time:	3ns	1 ns

Floating U_{cc}'s

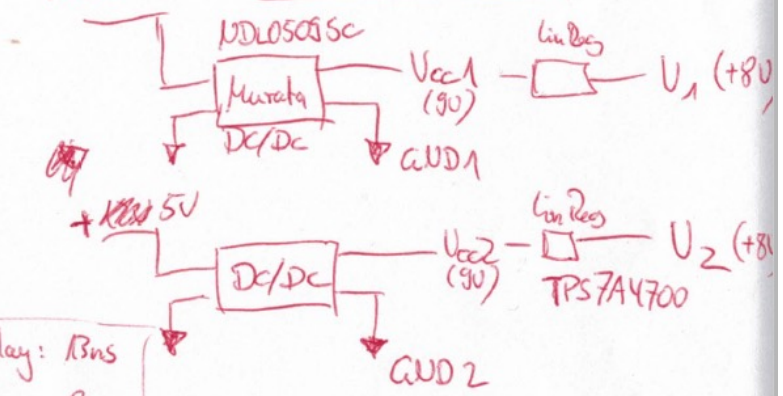

Propagation delay: 13ns
rise time: 8ns
fall time: 7ns

e-lego sub-module

RF Power Amplifier V187

Current version (18.03.2021): V3

V4 has been started to be used with backplane

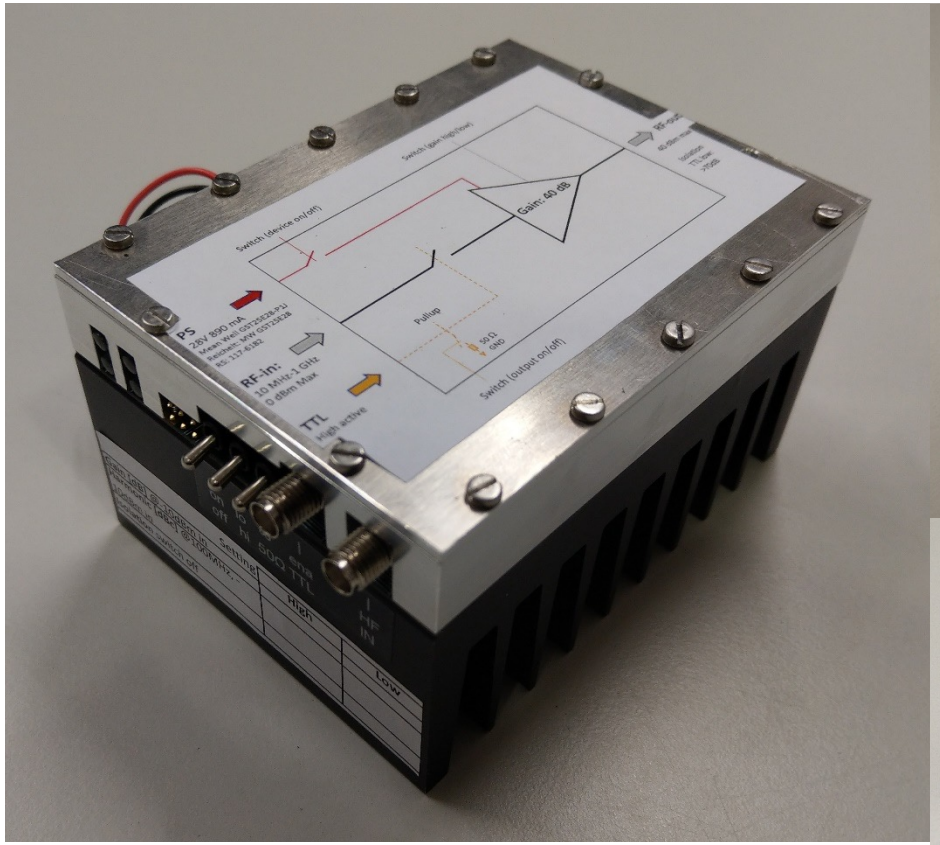

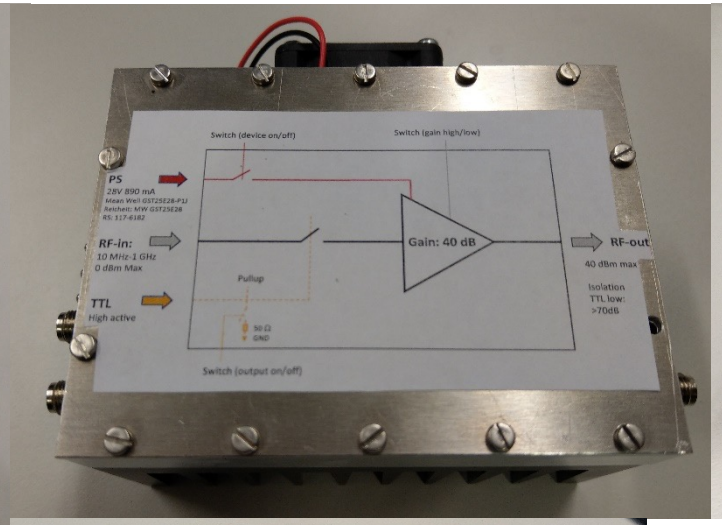

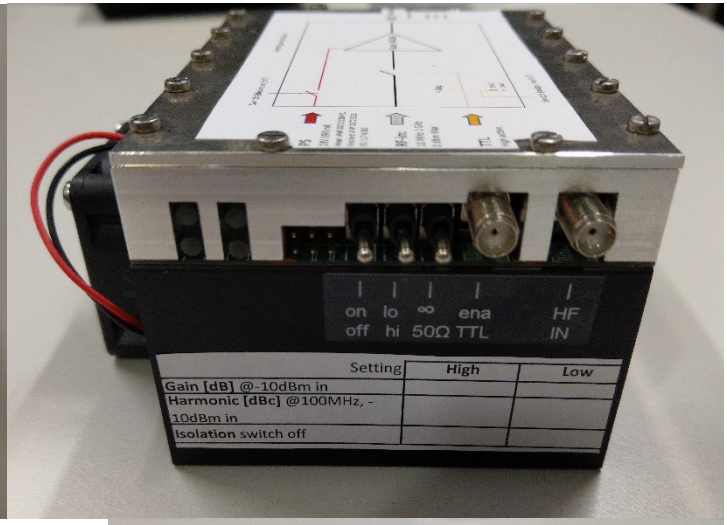

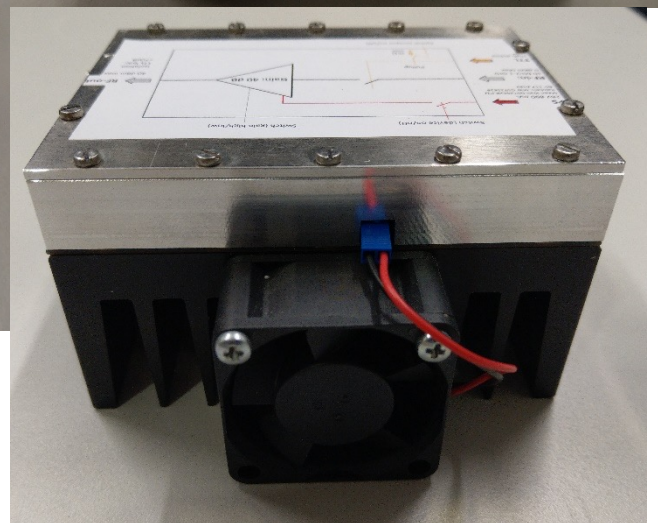

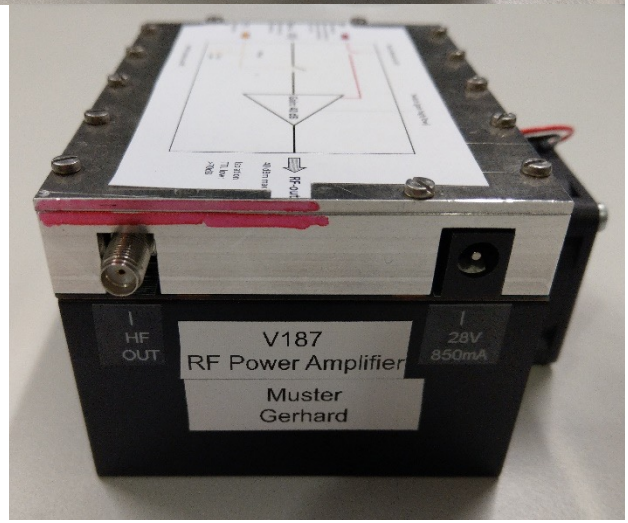

RF Power Amplifier V187

Test for high and low gain setting:

- Gain [in dB] @ input 100 MHz, -10 dBm
- harmonics [in dbc]@ input 100 MHz, -10 dBm
- isolation when switch off [in dbc]

https://www.minicircuits.com/WebStore/Amplifiers.html

Model Number	F Low (MHz)	F High (MHz)	Gain (dB) Typ.	NF (dB) Typ.	P1dB(dBm) Typ.	OIP3 (dBm) Typ.	Input VSWR (:1) Typ.	Output VSWR (:1) Typ.	Voltage (V)	Current (mA)	Case Style	Connector Type	Option
ZHL-5W-1+	5	500	45	4	37	49	2	2.5	24	3300	DDD131	SMA	Heat Sink

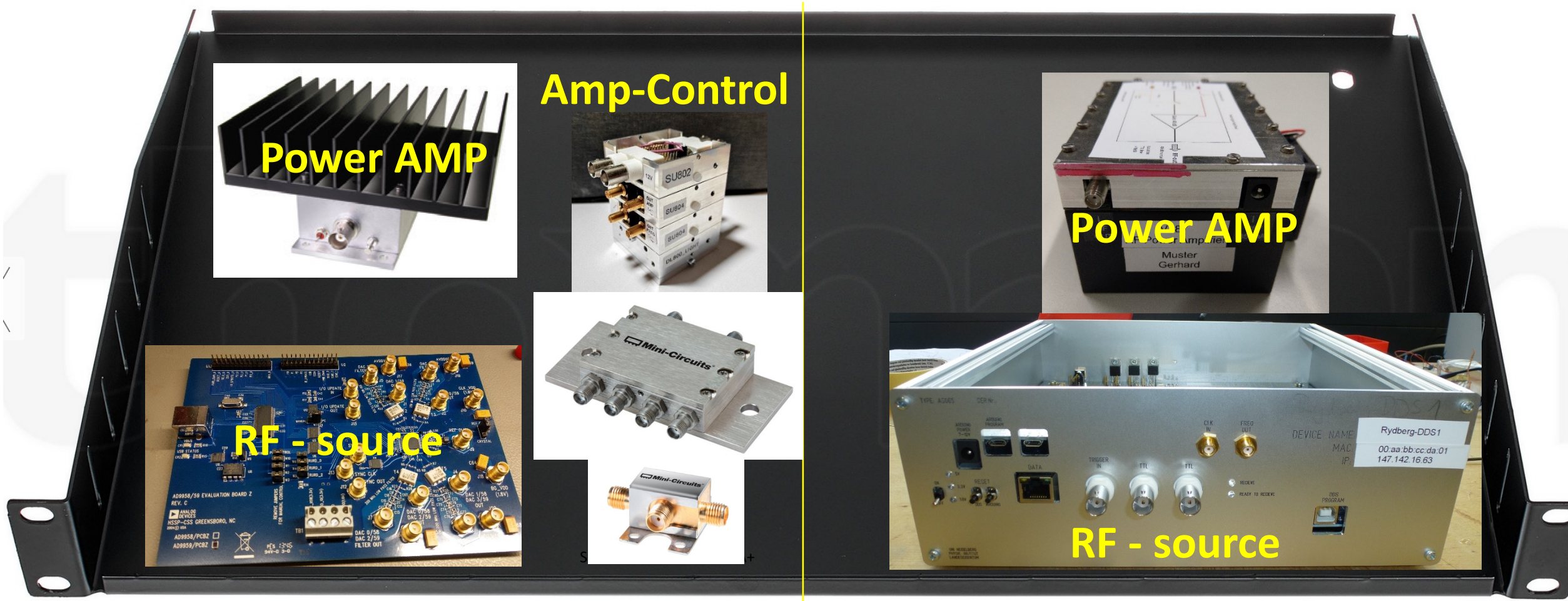
Power AMP
Amp-Control
RF - source
Power AMP
RF - source
Rydberg-DDS1
00:aa:bb:cc:da:01
147.142.16.63

Type A

Type B

- **Start with an empty module**

How to start a production in the workshop

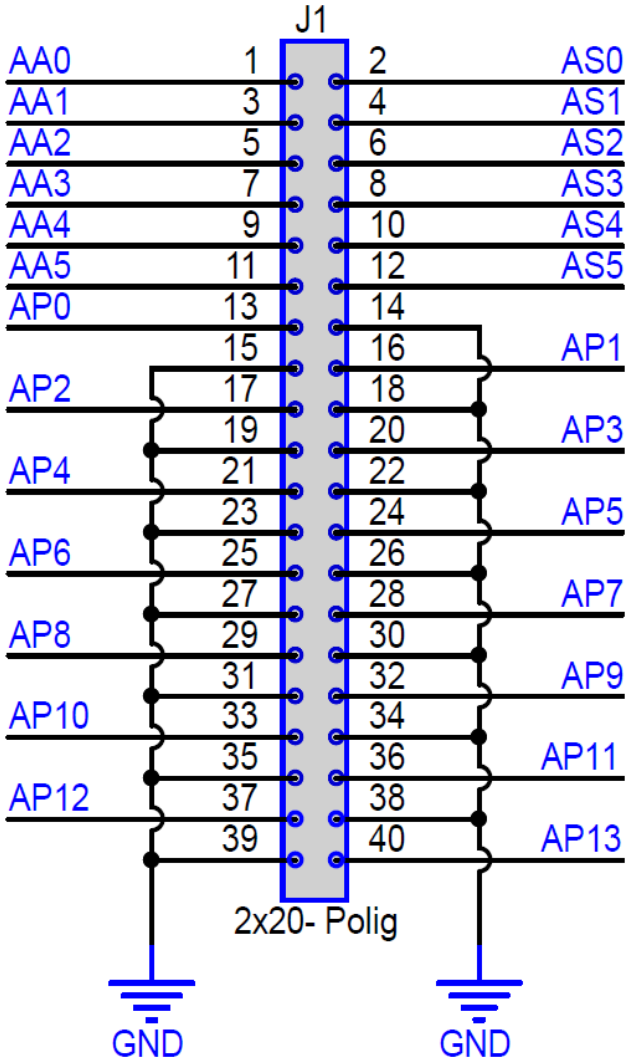

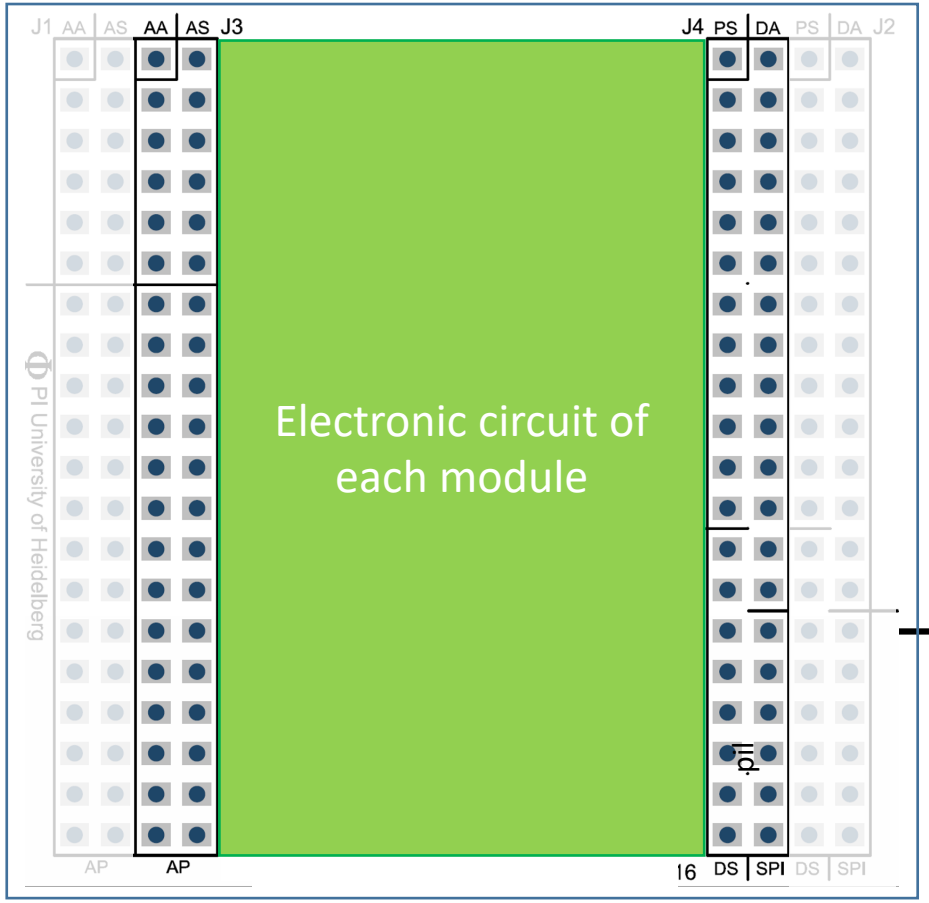

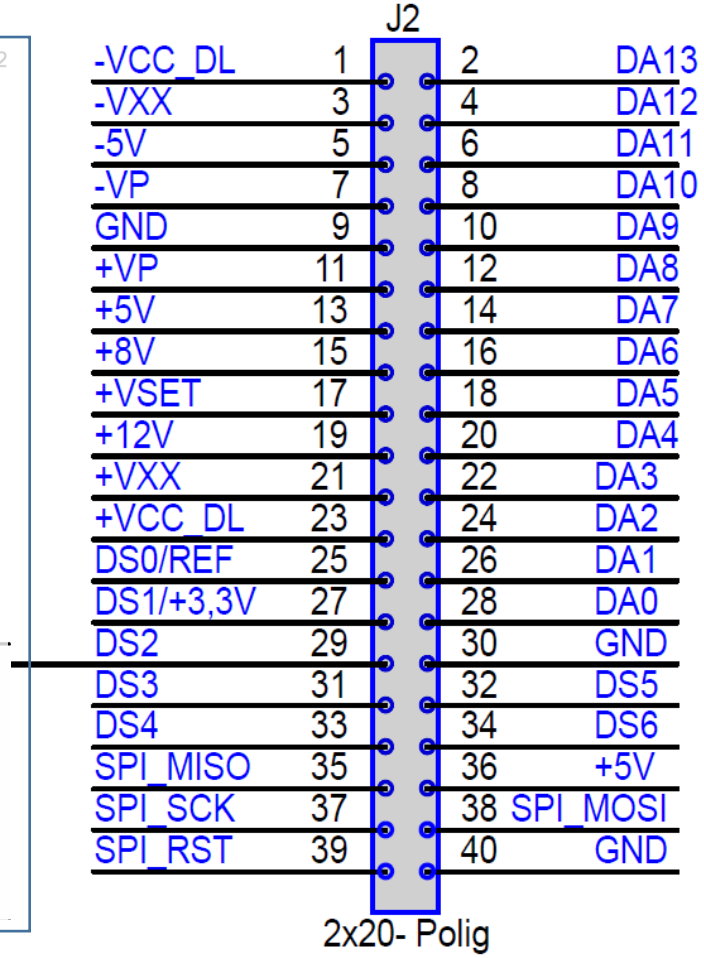

How to start a production in the workshop

example: universal driver – SU804

- **Start with an empty module**
- **Sketch the circuit**
- **State specs**

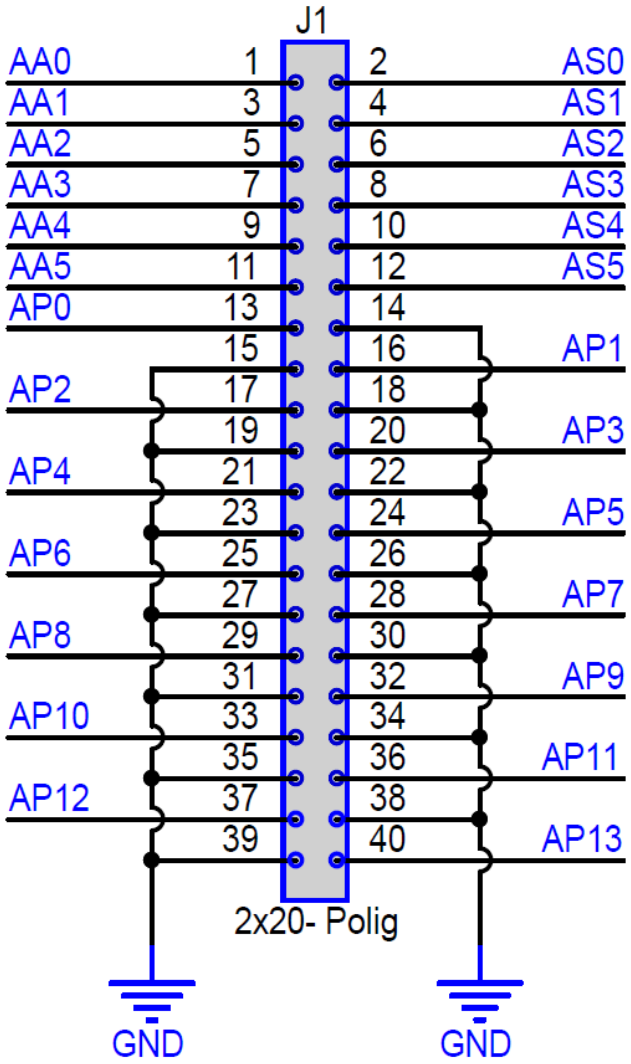

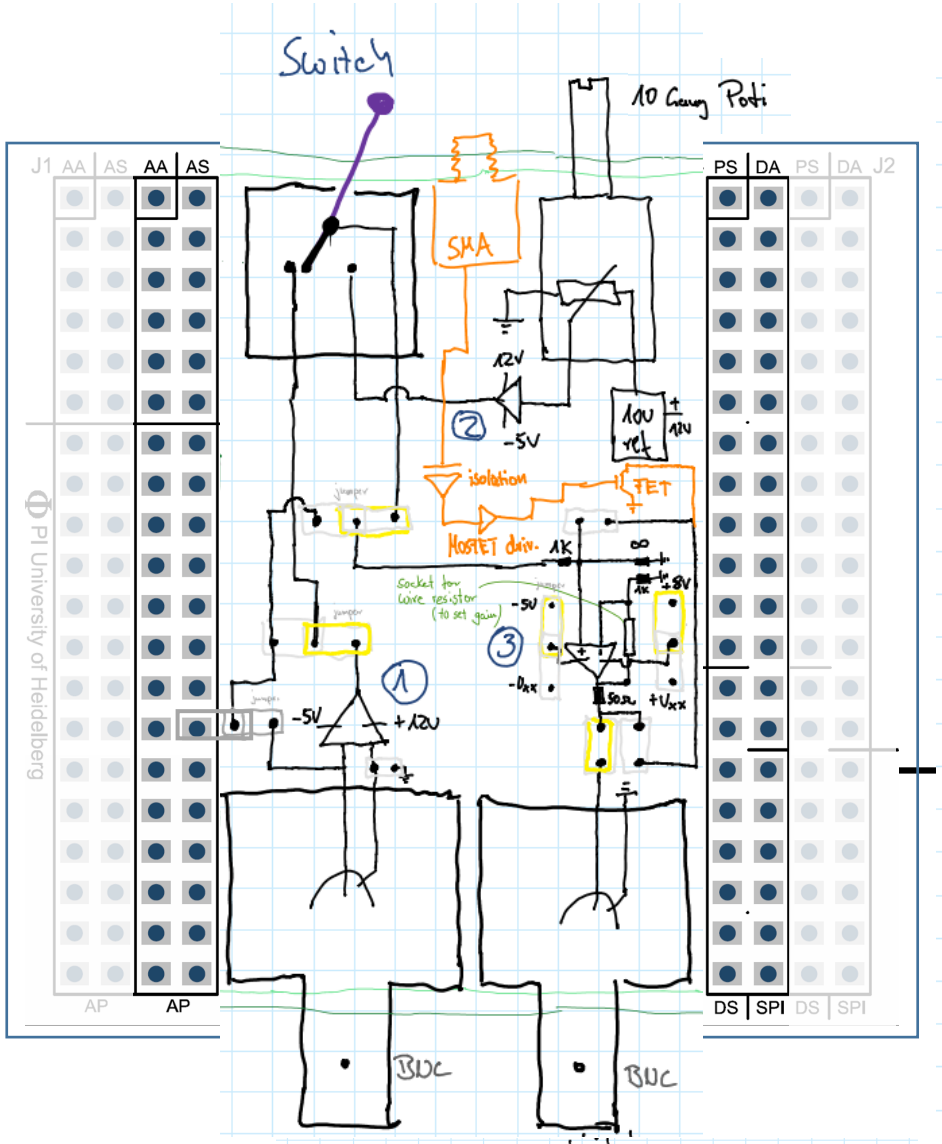

input

0- 10 V

output

a) 50 Ω load up to 5V output voltage

b) up to 17V

c) up to 27V

① Differential amplifier

Gain 1

Bandwidth: 30- 50 MHz

② Low noise Buffer (OP177)

Gain 1

BW: 10 KHz

③ Non-inverting amplifier

Gain adjustable: 0.1 - 10

BW: 30- 50 MHz

Capable to drive 50 Ω up to 5V

Template- sketch your schematic

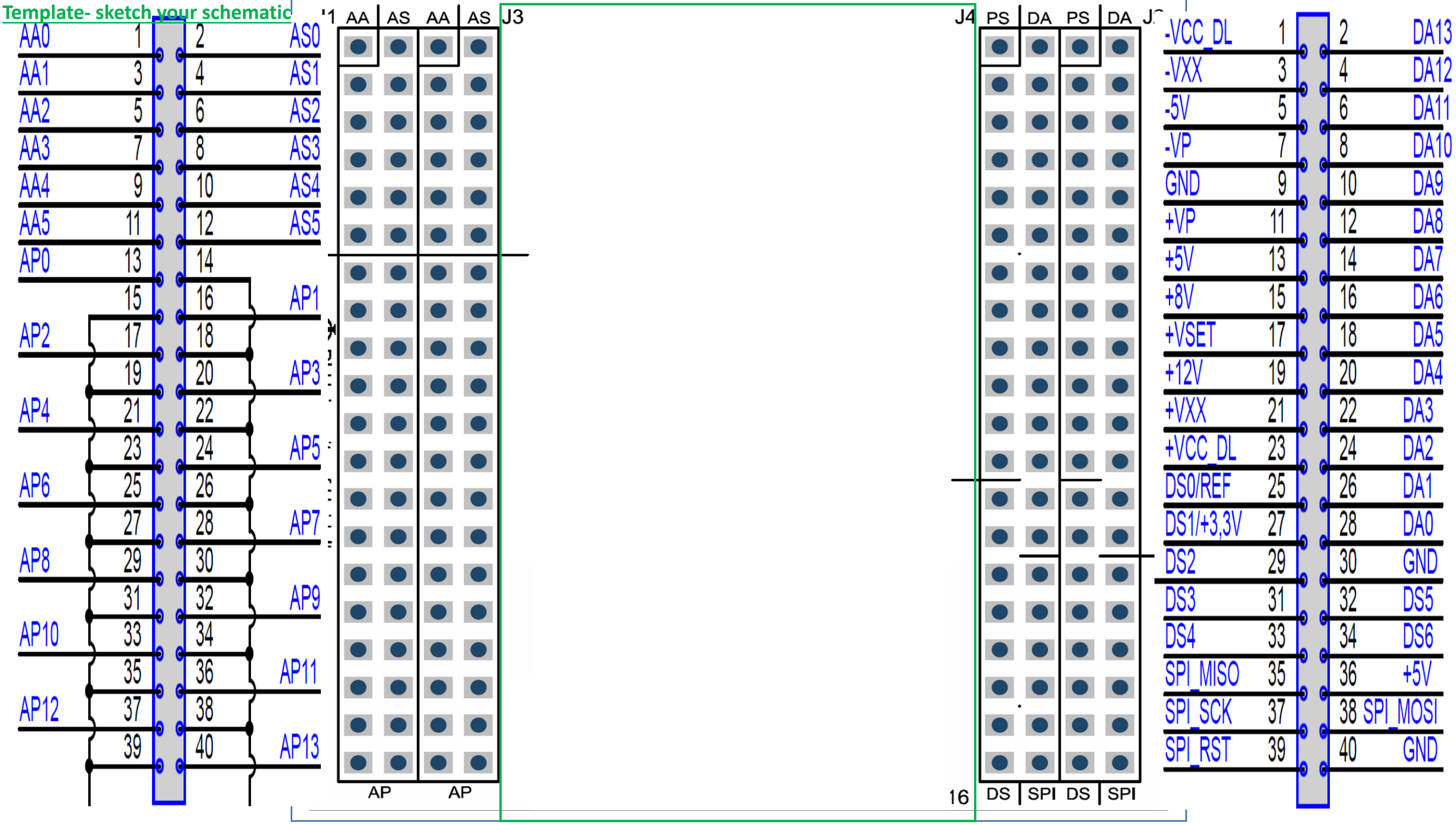

Board Rotation Protection

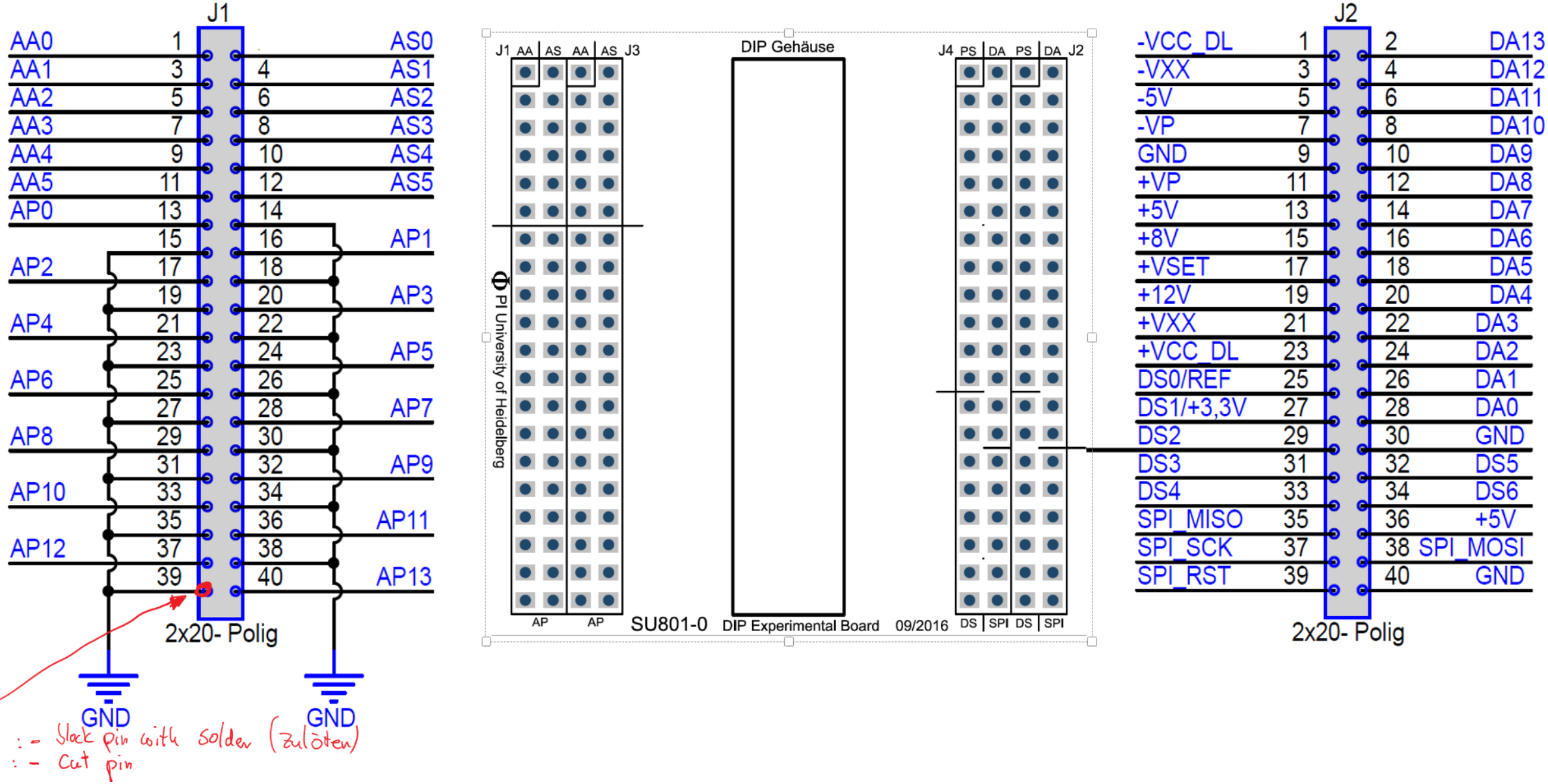

Documentation of electonic devices

1) Give it a serial number

2) Put the documentation on the \\pi2 Server

Documentation of electronic developments

Please document all electronic circuits and boxes by

1.) Labeling it with a serial number and

2.) by saving the circuit diagram on the pi2 -server

```
\\pi2.physi.uni-heidelberg.de\microcontroller\QD-ultracold\
```

Use your active directory credentials "ad\name" to access the pi2-server.

For a new development create a new folder with a consecutive serial number. E.g. if you develop a new current control circuit create a new folder Q-CC003 if the previous serial number in the CC folder has been Q-CC002. If you make a modification to the Q-CC003, generate a new version in the folder, e.g Q-CC003-2. For the sub-folder structure of each folder use the one which is given in the template.

```
\\pi2.physi.uni-heidelberg.de\microcontroller\QD-ultracold\Q-00 template\
```

Put the Serial Number onto your Box. Use a Dymo label or a Box-ID label For the documentation put all available files (schematics, layout, CAD files, software code, documentation, etc..) into that folder. You can use whatever format you prefer. If you have some wiki or online documentation, please put the corresponding link into a text file.

https://www-intern.physi.uni-heidelberg.de/Wikis/ultracold_wiki/index.php/Documentation_of_electronic_developments

e-lego manual

https://heibox.uni-heidelberg.de/f/5b7db6b8e09b43b0a7db/?dl=1

QD and ultracold circuits, developments and characterization

Network > pi2 > microcontroller > QD-Ultracold

Name	Date modified
Q-00 - Template folder	10.03.2017 08:56
Q-01 - Info	10.03.2017 08:56
Q-99 - Backups	10.03.2017 08:56
Q-Ar - Arduino circuits	10.03.2017 08:58
Q-CC - Current Control circuits	10.03.2017 08:56
Q-DH - PhD Head	10.03.2017 08:56
Q-Dr - Driver	10.03.2017 09:16
Q-EC - Experimental Control	10.03.2017 08:56
Q-IL- Interlock	23.03.2017 10:25
Q-In - Indicators	10.03.2017 08:56
Q-Lo - Logic Circuits	11.04.2017 09:29
Q-Op - Opamp Circuits	14.08.2017 17:00
Q-PD - Photodiode	10.03.2017 08:56
Q-PS - Power Supplies and Voltage sourc...	22.03.2017 16:49
Q-RF - RF circuits	10.03.2017 08:56
Q-RP - Redpitaya	09.03.2017 14:56
Q-Se - Sensors	10.03.2017 08:56
Q-Sw - Switches	10.03.2017 08:56

Example

For a new development(- version):

→ Create a new serial number (consecutive)

> Network > pi2 > microcontroller > QD-Ultracold > Q-CC - Current Control circuits > Q-CC001 H-bridge HIP4081

Name	Date modified	Type
Q-CC001-1 Feshbach-HIP old experiment	10.03.2017 08:56	File folder
Q-CC002-2 Feshbach-HIP new experiment	10.03.2017 08:56	File folder
HIP - Algorithm for successful HIP Reactivation.pdf	23.09.2015 11:24	Adobe Acrobat D...

Example: \\pi2\microcontroller\QD-Ultracold\Q-DC - Device Characterization\Q-DC-002 RF sources

Developments made by the electronic workshop.

E-workshop wiki

The documentation of EW developments can be found in the following folder:

```
\\pi2.physi.uni-heidelberg.de\geraete\Geraete
```

To add some own documentation, e.g. a test result, you can obtain write access to the specific subfolder by writing an email to edv@physi.uni-heidelberg.de [1] with the following message

```
Please give write access to the groups "qd" and "ultracold"
on the following folder
\\pi2.physi.uni-heidelberg.de\geraete\Geraete\***e.g. SU\SU-
800***
```

After obtaining write access you can copy your files using the structure of the sub-folders given in the above template

e-lego manual

https://heibox.uni-heidelberg.de/f/5b7db6b8e09b43b0a7db/?dl=1

PI developments

Network > pi2 > geraete > Geraete

Name	Date modified	Type	Size
_Template	16.06.2014 15:36	File folder	
A	30.06.2016 08:31	File folder	
ADA	27.01.2016 06:47	File folder	
ALICE_KIP	28.01.2015 10:37	File folder	
AS	07.02.2017 13:35	File folder	
C	15.03.2011 16:31	File folder	
D	20.03.2013 09:52	File folder	
DL	30.10.2017 16:57	File folder	
E	14.03.2017 13:28	File folder	
F	05.07.2011 14:22	File folder	
Frontplatten	15.01.2015 09:02	File folder	
G	02.12.2016 11:40	File folder	
Geplant	08.04.2013 10:29	File folder	
Geraete_PI_Gruppen	14.01.2016 15:40	File folder	
H	07.05.2014 15:22	File folder	
IF	10.11.2017 10:58	File folder	
K	15.03.2011 16:35	File folder	
L	13.11.2015 08:58	File folder	
LF	15.03.2011 16:36	File folder	
M	30.05.2017 10:07	File folder	
MP	20.07.2011 11:08	File folder	
N	22.03.2017 16:15	File folder	
NIM	15.03.2011 16:27	File folder	
PS	05.07.2017 09:39	File folder	
S	15.03.2011 16:37	File folder	
SM	19.02.2016 07:10	File folder	
Sonstige	13.03.2017 14:09	File folder	
ST	22.05.2014 09:08	File folder	
SU	30.05.2017 10:57	File folder	
SUB	15.03.2011 16:23	File folder	
T	15.03.2011 16:38	File folder	
TB	15.03.2011 16:38	File folder	
TS	15.03.2011 16:38	File folder	
U	21.01.2014 10:20	File folder	
V	17.10.2016 14:37	File folder	
VV	14.08.2017 14:43	File folder	

DC/DC converter prototype

A-Arduino
connected to µC ADC

AIO-Standard

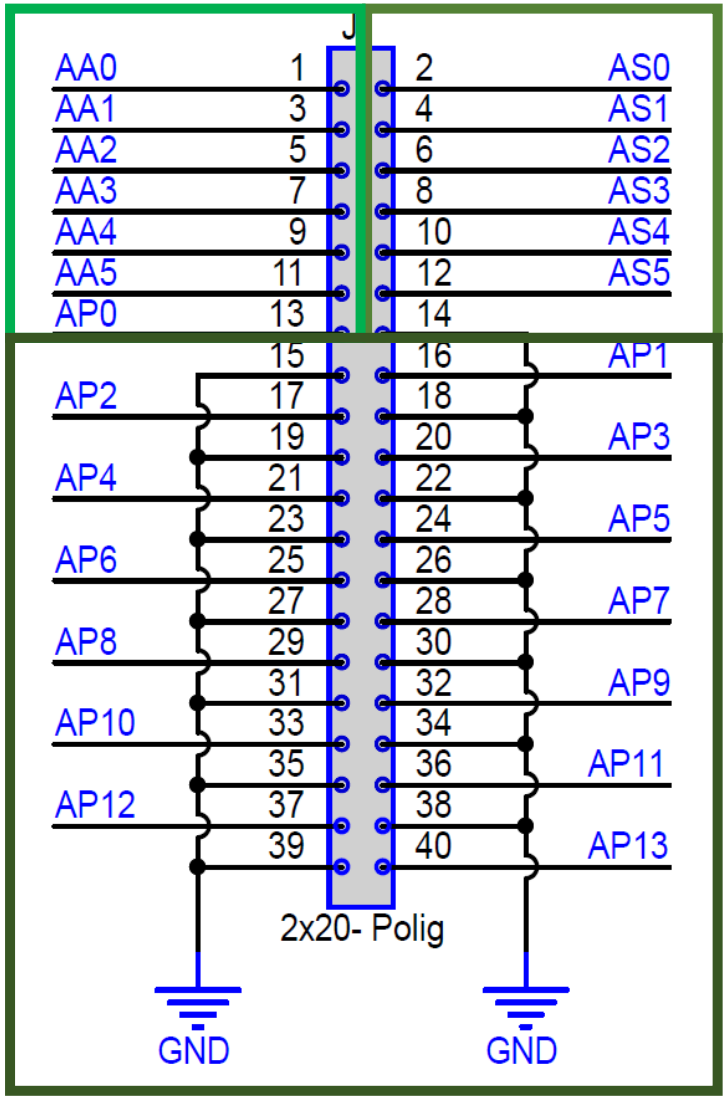

AIO-Precission
shielded by surrounding ground pins

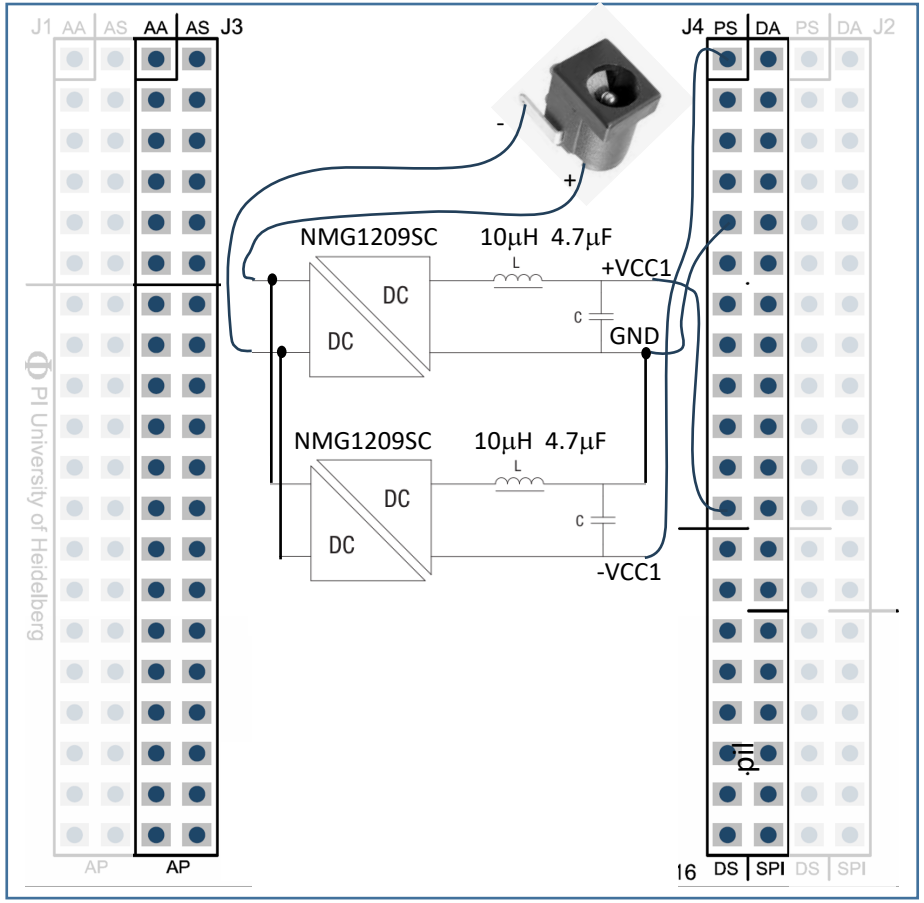

Supply Voltages

DIO-Arduino
connected to µC DIO

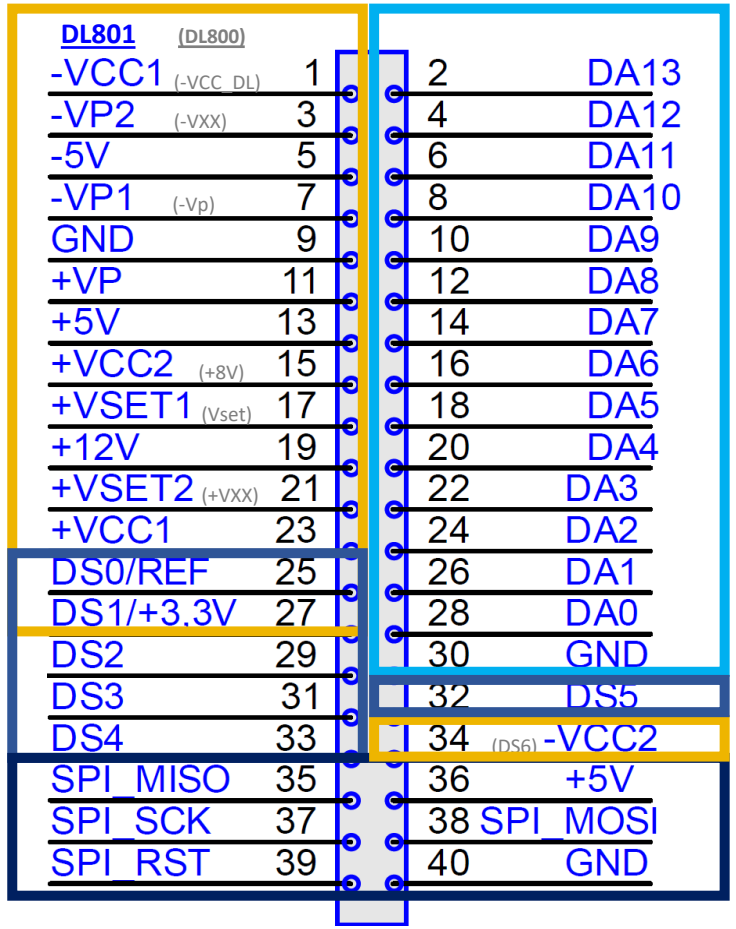

duplicates **DIO - Standard**

SPI
connected to µC SPI

Default Values:	
-VCC1:	-7V (-13V/-24V)
-VP2:	-2,7V
-VP1:	-6V
-VCC2:	-13V (-24V)
+VP: =	+VSET1
+VCC2:	+7V
+VSET1:	+6V
+VSET2:	+18V
+VCC1:	+13V (+24V)

DC/DC converter prototype

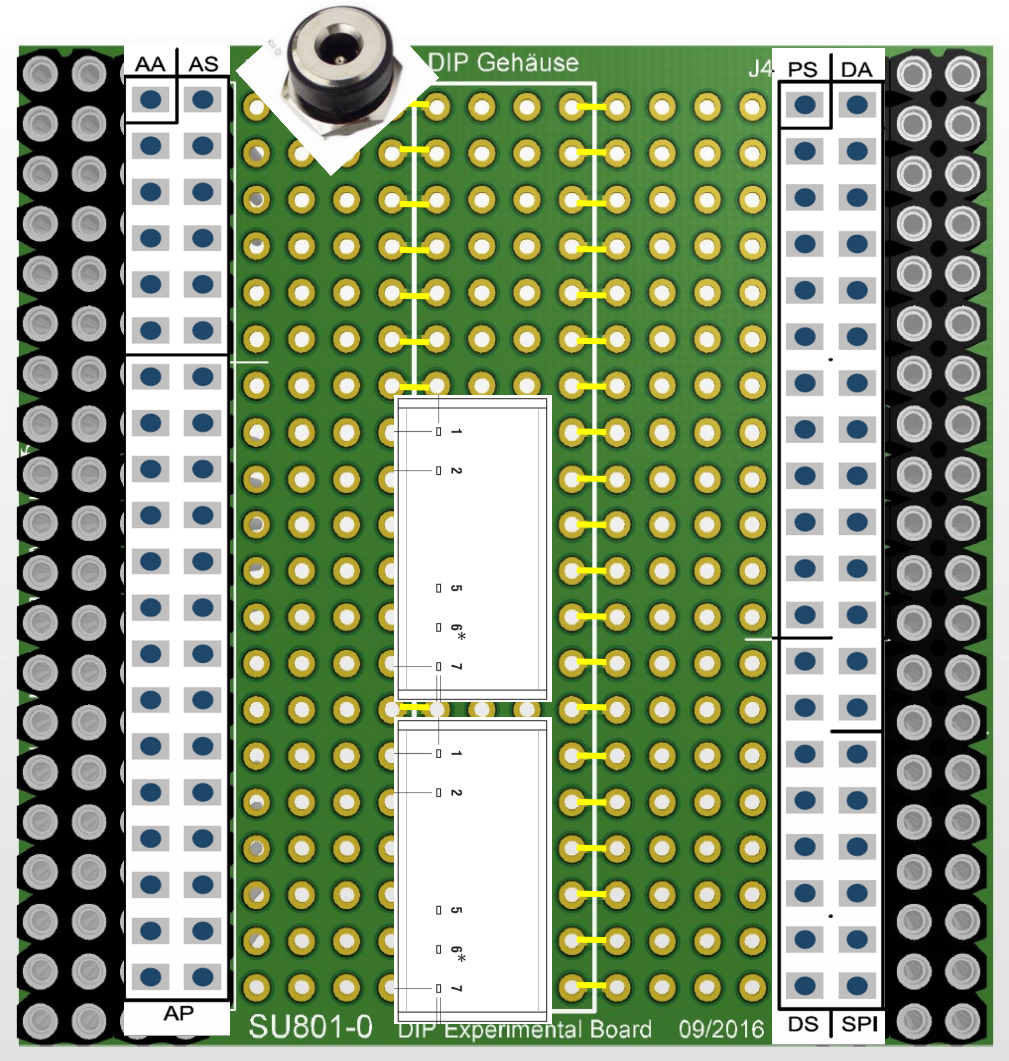

Single Output

Pin	Function
1	+Vin
2	-Vin
5	-Vout
7	+Vout

SU817

A-Arduino
connected to µC ADC

AIO-Standard

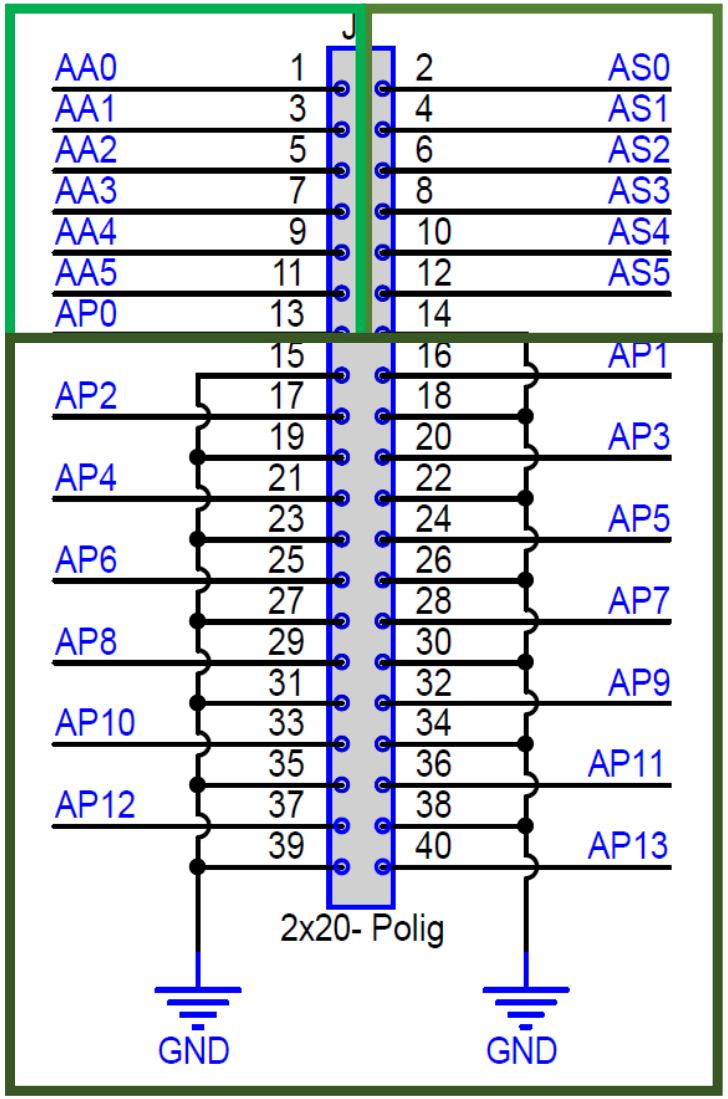

AIO-Precission
shielded by surrounding ground pins

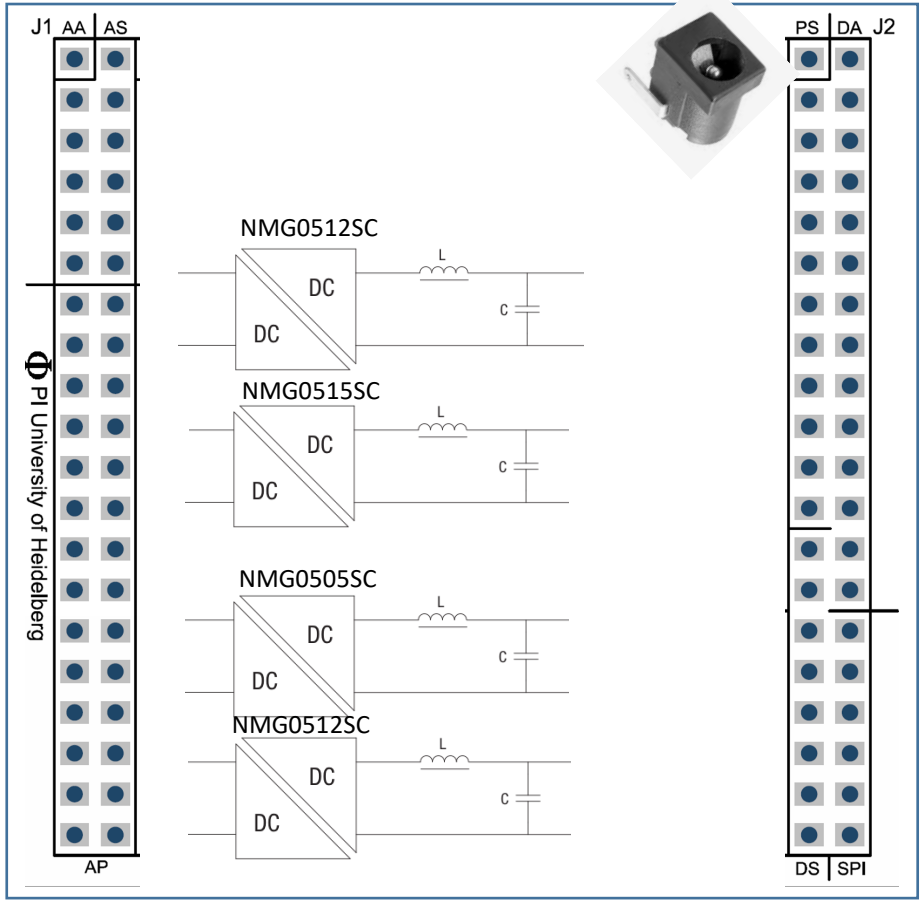

duplicates

DIO - Standard

SPI
connected to µC SPI

Supply Voltages

DIO-Arduino
connected to µC DIO

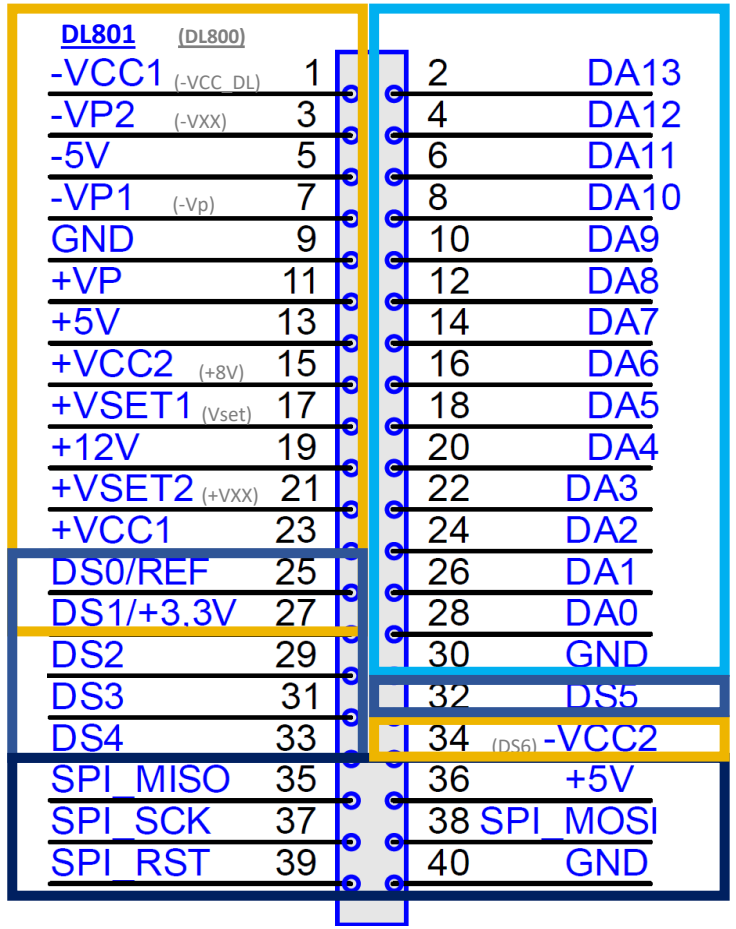

Default Values:

-VCC1:	-7V (-13V/-24V)
-VP2:	-2,7V
-VP1:	-6V
-VCC2:	-13V (-24V)
+VP: =	+VSET1
+VCC2:	+7V
+VSET1:	+6V
+VSET2:	+18V
+VCC1:	+13V (+24V)

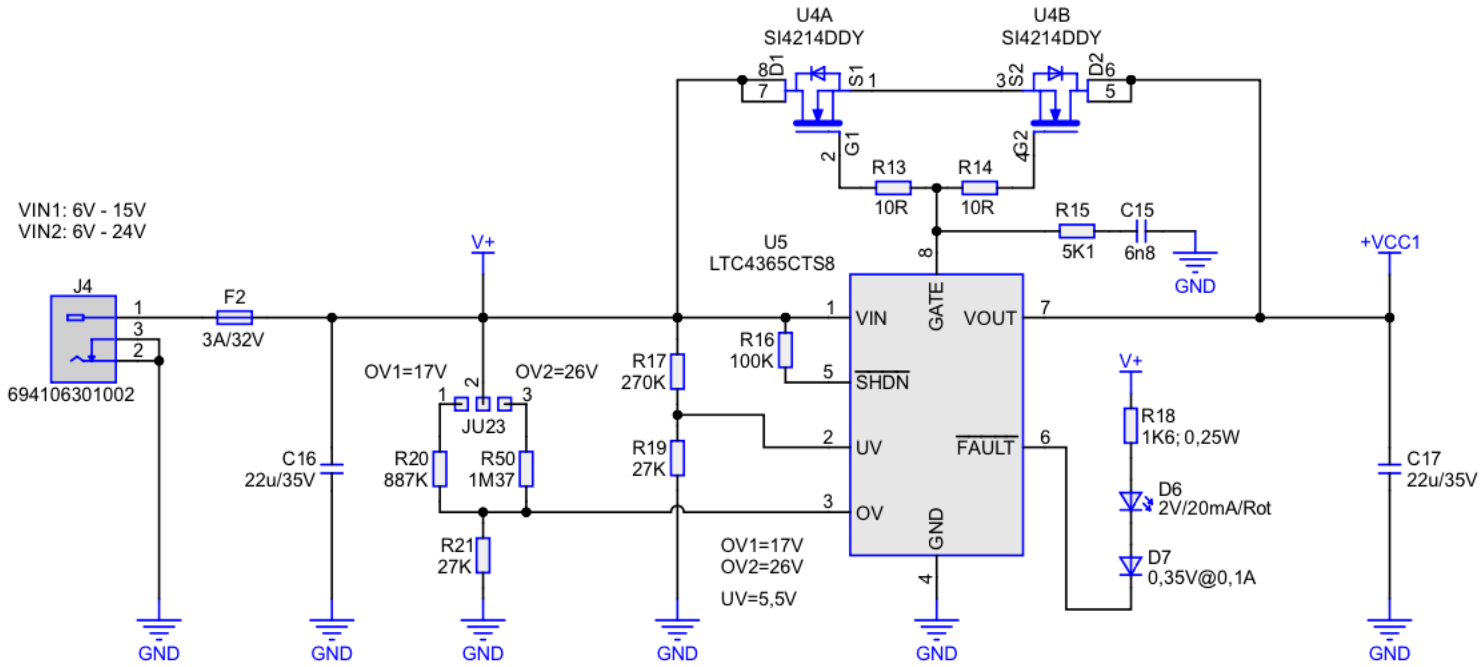
U4A
SI4214DDY
U4B
SI4214DDY
D1
S1
S2
D2
G1
G2
R13
10R
R14
10R
R15
5K1
C15
6n8
GND
VIN1: 6V - 15V
VIN2: 6V - 24V
J4
694106301002
F2
3A/32V
V+
U5
LTC4365CTS8
VIN
GATE
VOUT
SHDN
UV
FAULT
OV
GND
+VCC1
R16
100K
OV1=17V
OV2=26V
JU23
R17
270K
R19
27K
R20
887K
R50
1M37
R21
27K
C16
22u/35V
OV1=17V
OV2=26V
UV=5,5V
R18
1K6; 0,25W
D6
2V/20mA/Rot
D7
0,35V@0,1A
C17
22u/35V
GND

New: e-lego board design:

https://www.samtec.com/products/qth-060-04-l-d-a

Connectors:

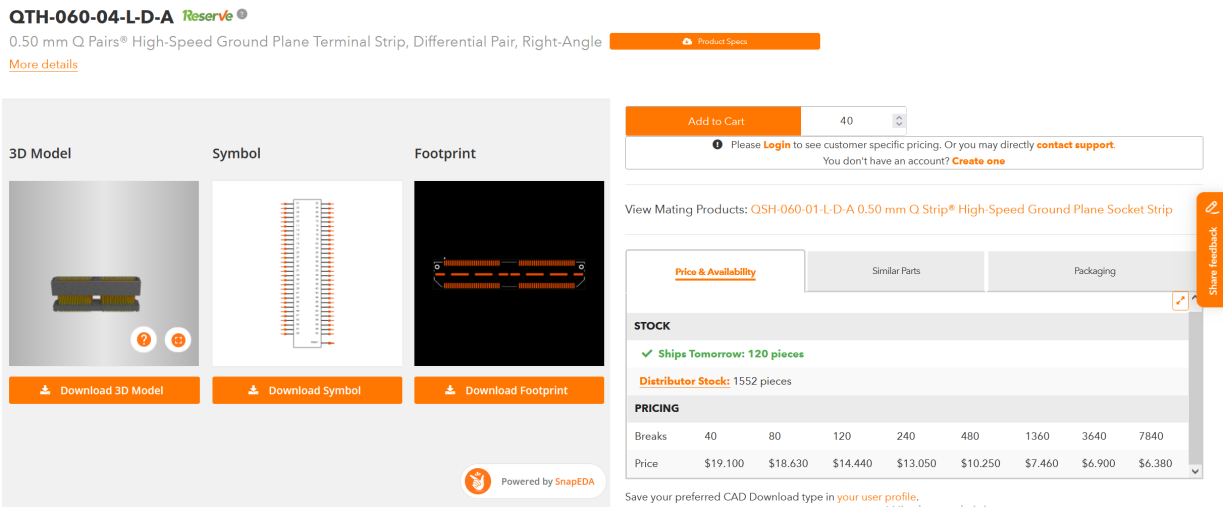

Pitch: 0.5 mm
Stack hight: up to 16 mm

E-lego Development Board

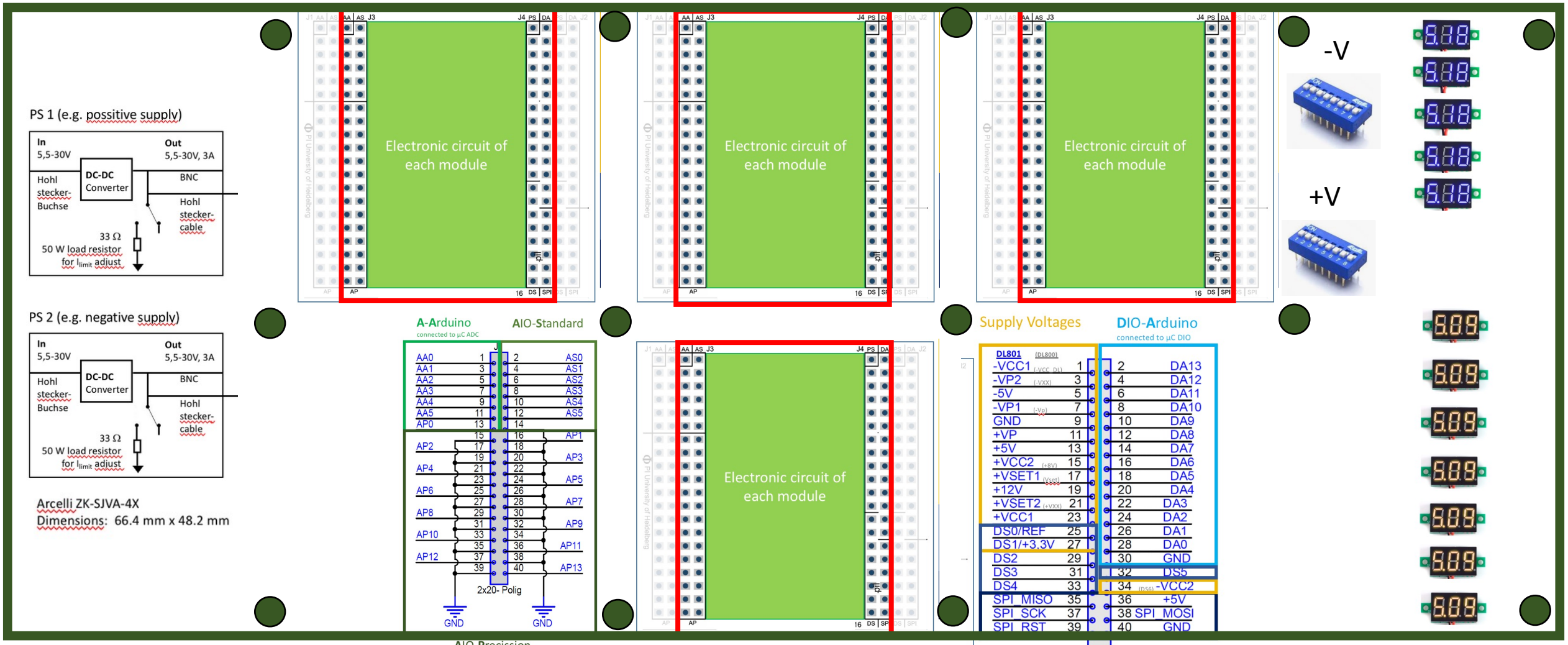

- Alle Pins Verbinden
- Cutout
- Große Beschriftungen,
- Testpunkte
- Füße
- Strombegrenzung
- Multimeter für alle -V und +V über DIP Schalter

https://www.berrybase.de/0-28-mini-digital-voltmeter-mit-led-anzeige-3-2-30v-2-wire-blau

0,28" Mini Digital-Voltmeter mit LED Anzeige, 3,2-30V, 2-Wire, blau

Artikel-Nr.: SVM330-B | EAN: 4251266707332

https://www.berrybase.de/0-28-mini-digital-voltmeter-mit-led-anzeige-3-2-30v-2-wire-gelb

0,28" Mini Digital-Voltmeter mit LED Anzeige, 3,2-30V, 2-Wire, gelb

Artikel-Nr.: SVM330-Y | EAN: 4251266707325

https://www.amazon.de/AZDelivery-Digital-Voltmeter-7-Segment-LED-Anzeige/dp/B08T252LCY/

https://www.amazon.de/gp/product/B07MY399GQ/ref=ppx_yo_dt_b_search_asin_title?ie=UTF8&psc=1

e-lego stock

(opposite to the QD Testlab 99.410)

elego - Photodiode - submodule VV067
e-lego
Mico USB Cables
- Only types used for SU800+VV67
(shielding connected to both connectors)
elego - Photodiode - buffer amplifier SU800
e-lego
SU801 - End board
e-lego SU805
GENERAL OPAMP BOARD
e-lego
Hamamatsu Photodiode Sensors
e-lego
SU-811
Solid State Relais
e-lego
SU-810
Instrumentation Amplifier
e-lego
SU 806 USB Connector
e-lego
e-lego
SU-807
PID Regulator
e-lego
SU-809
Optocoupler MOSFET driver

Appendix

Molex connector standard

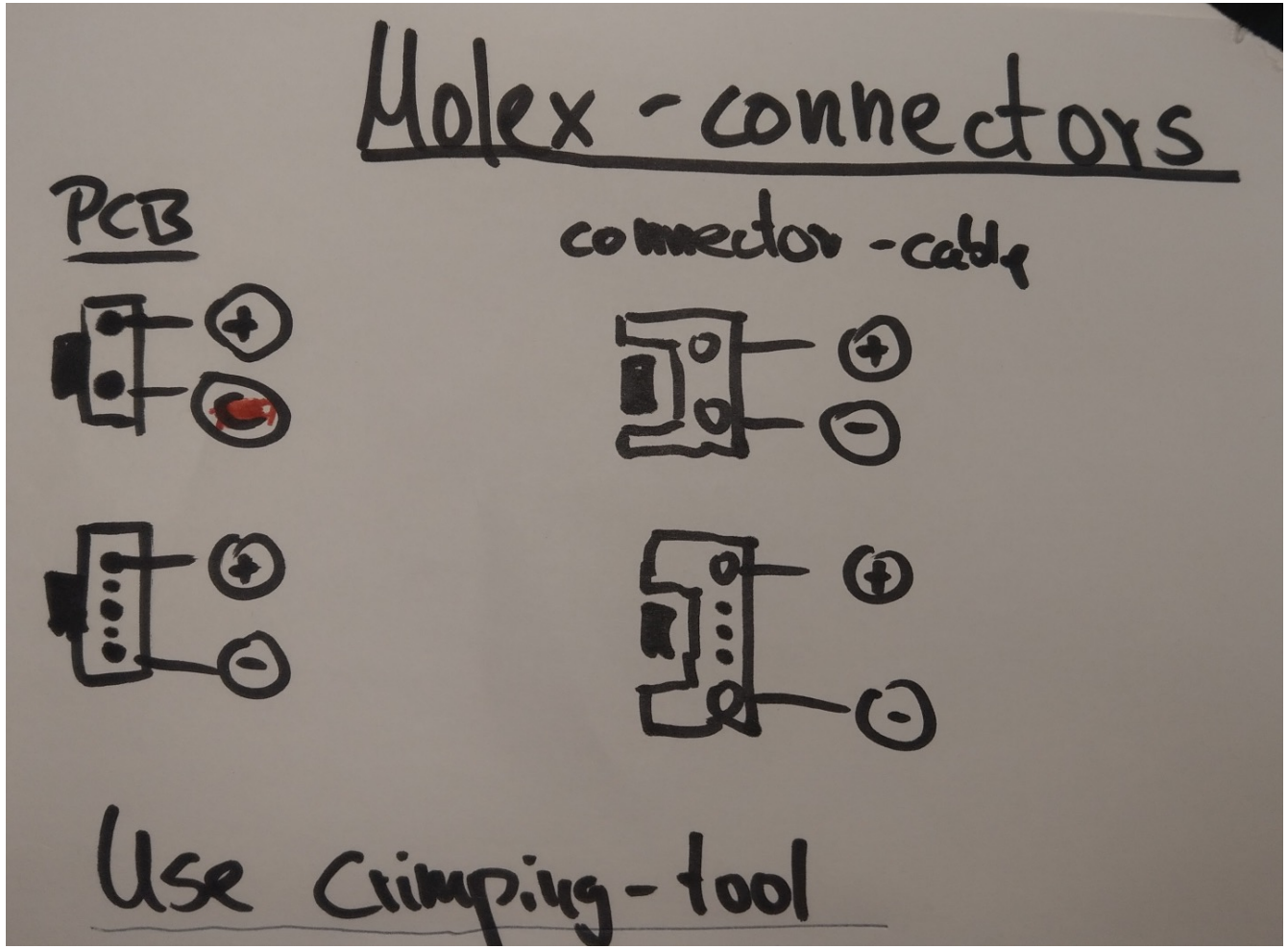

Typical e-lego issues:

- Sort and shelf used modules
- Label used modules

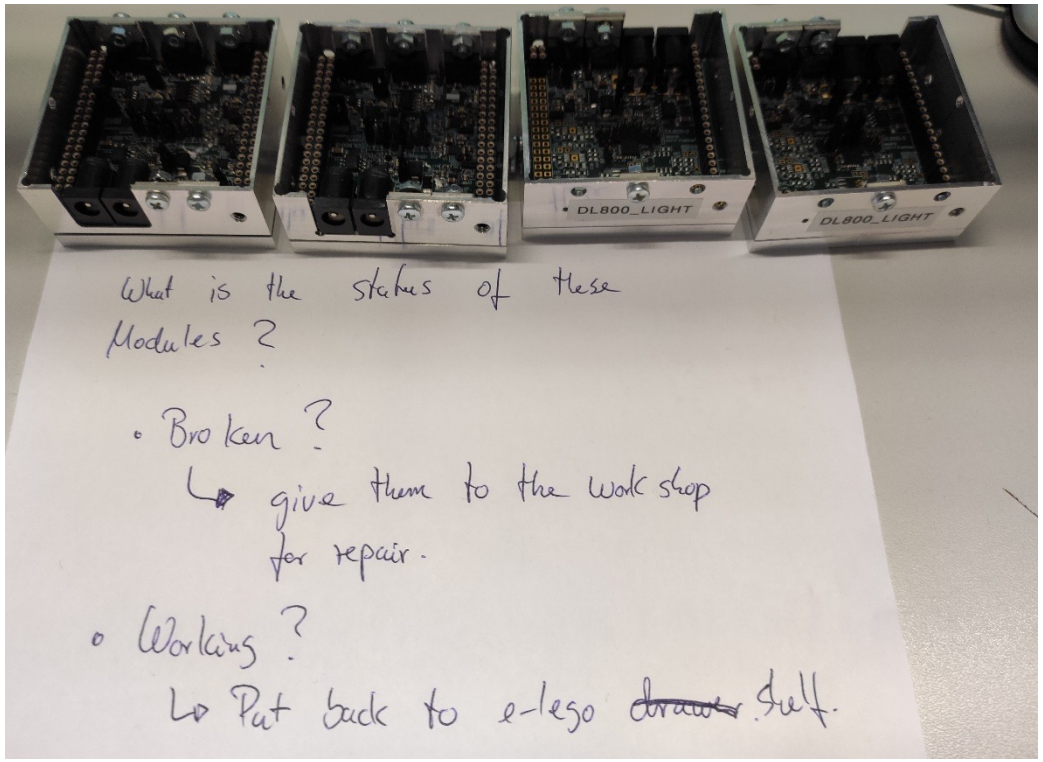

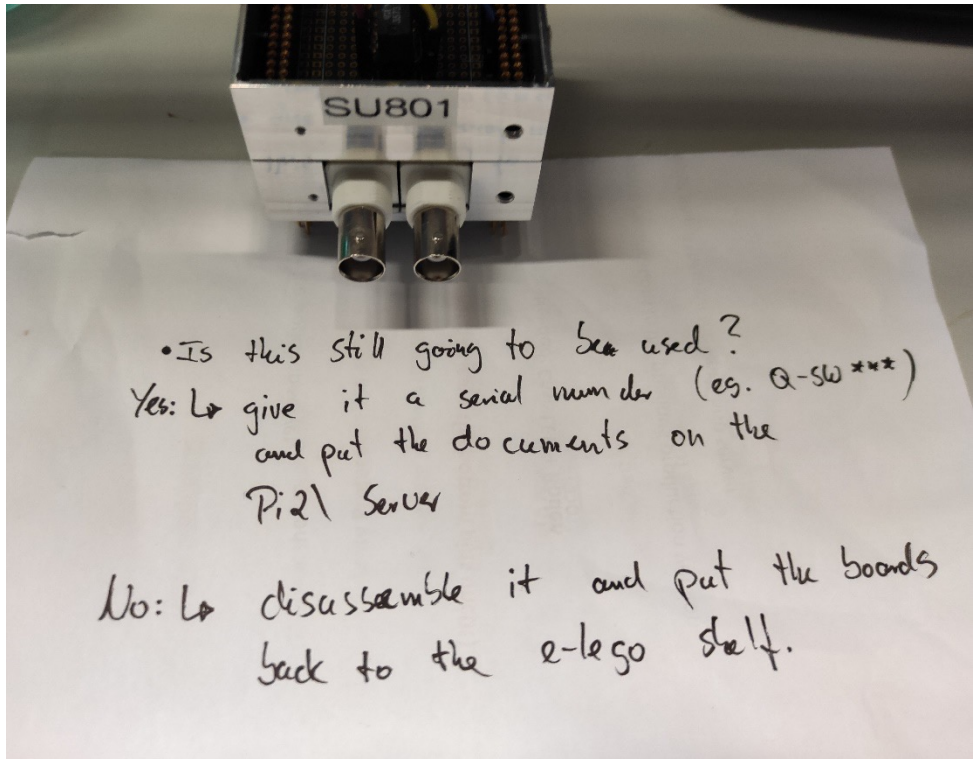

Noise and Transferfunction – Example SU800-2

Power Spectral density

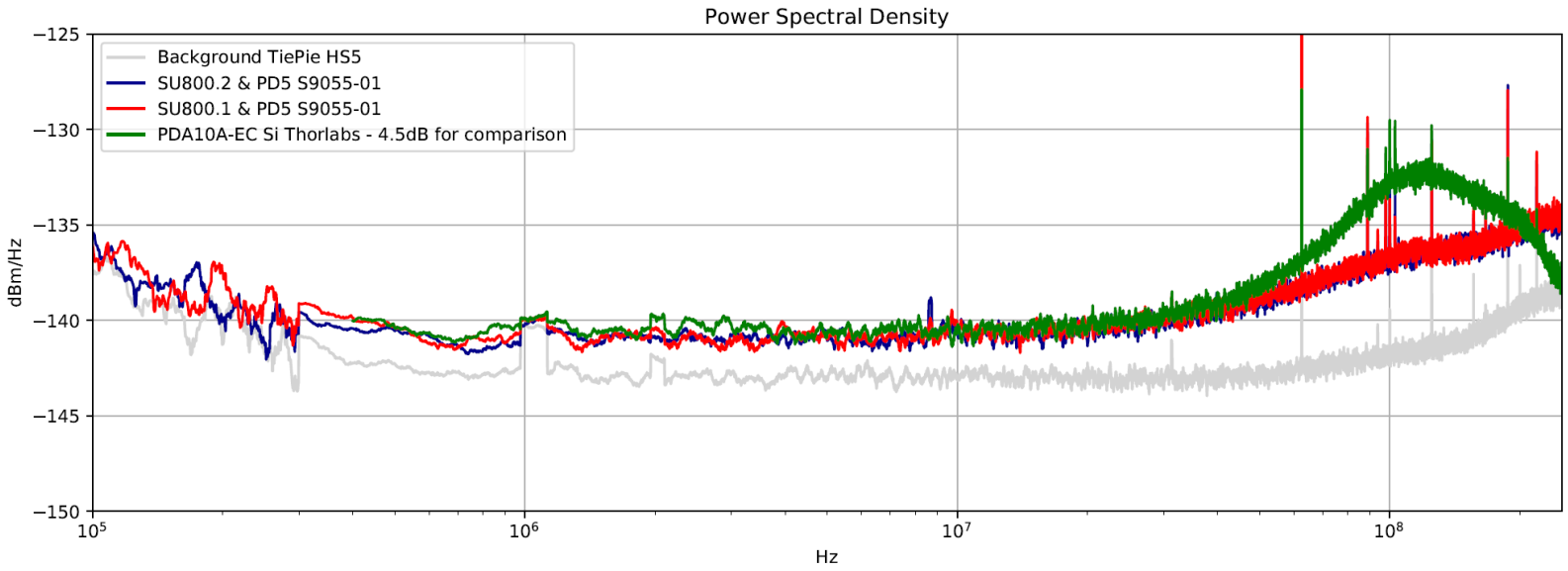

Bode-Plot

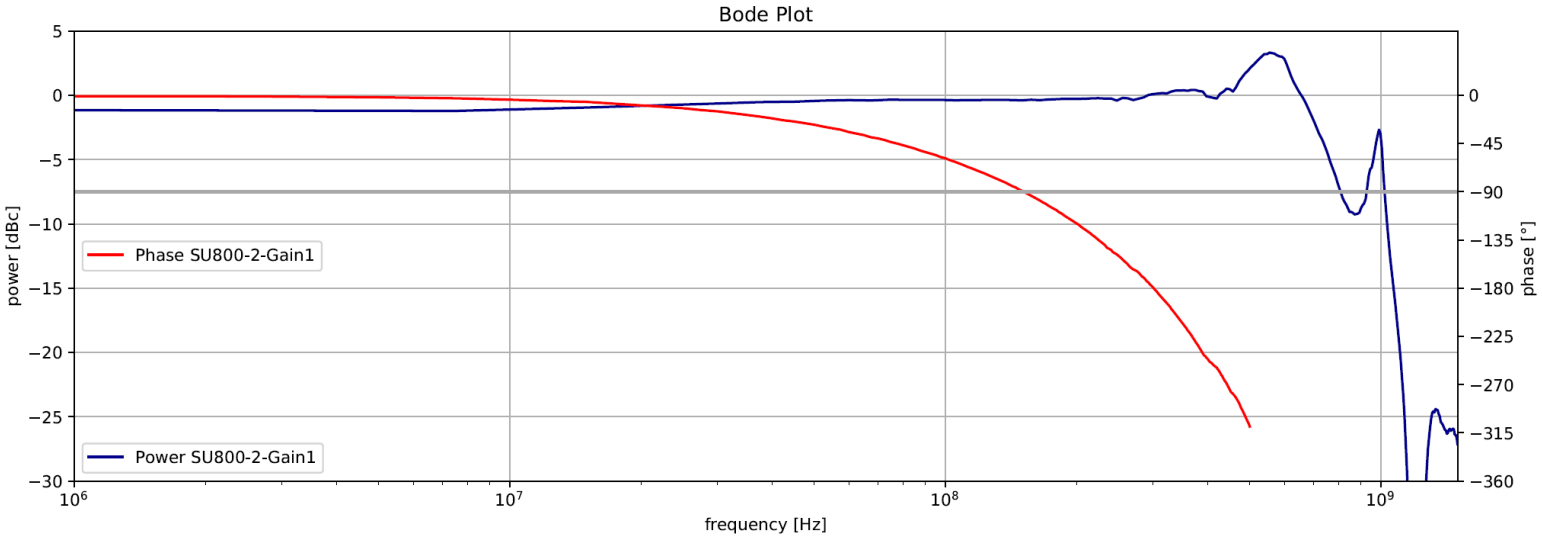

Noise Characterization issues: Downsampling of noise and Differential Measurement

16 bit resolution

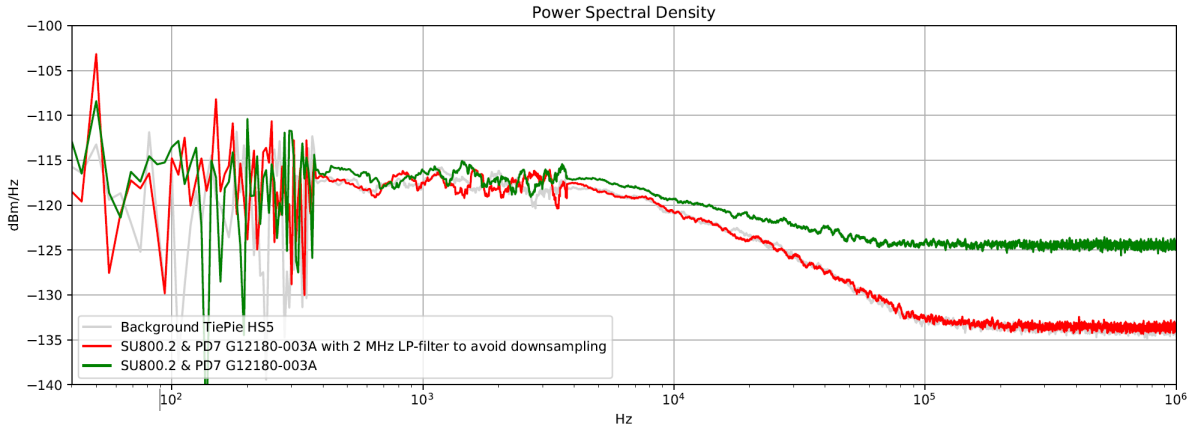

For low frequency applications use LP filter to avoid downsampling of high frequency noise in you digital device

Comparison single ended vs. Differential (HS6)

Note: differential measurement is very sensitive to where the ground is connected to

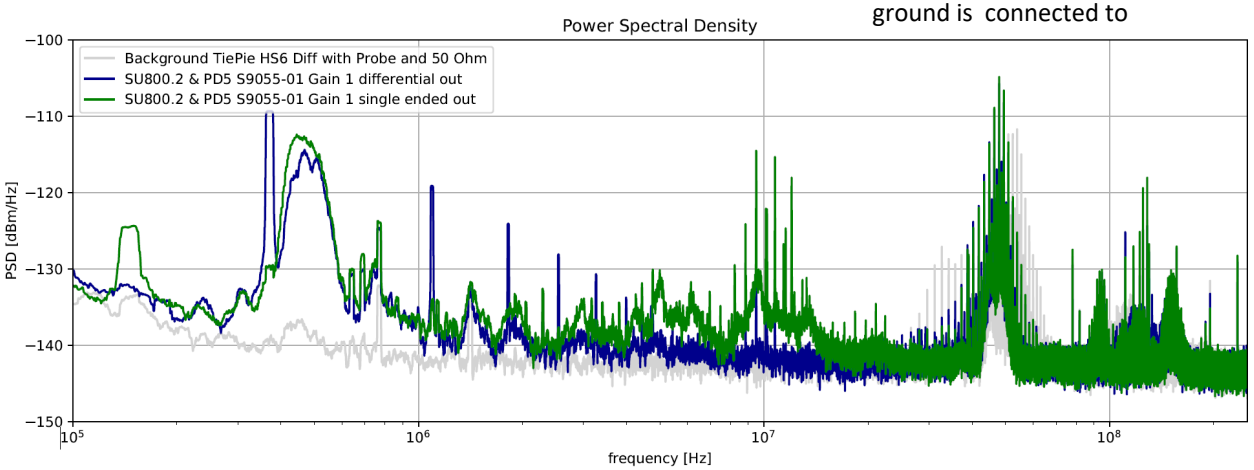

12 bit resolution

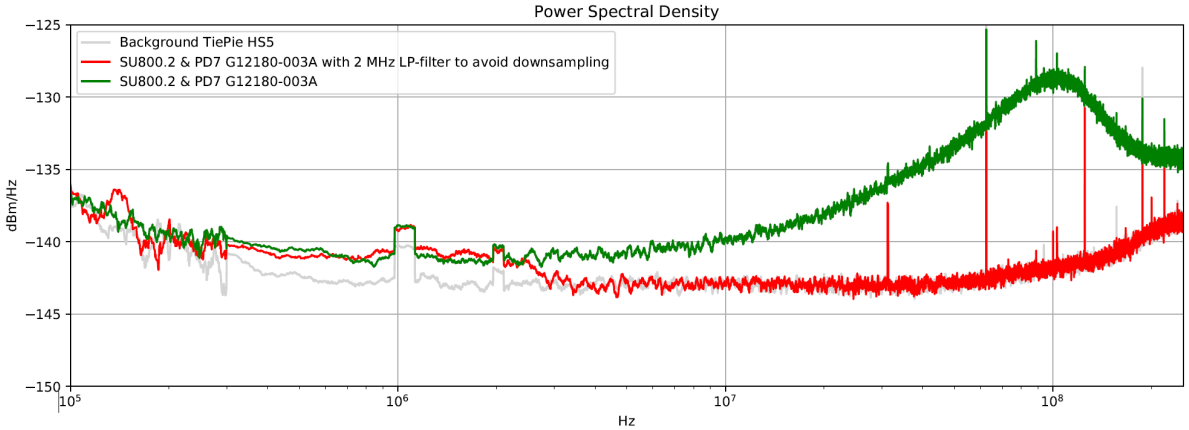

High Speed Subtractor with SU800:

Input impedance: ~ 50 Ohm

Connect AS3 and AS4 to input of differential Amplifier

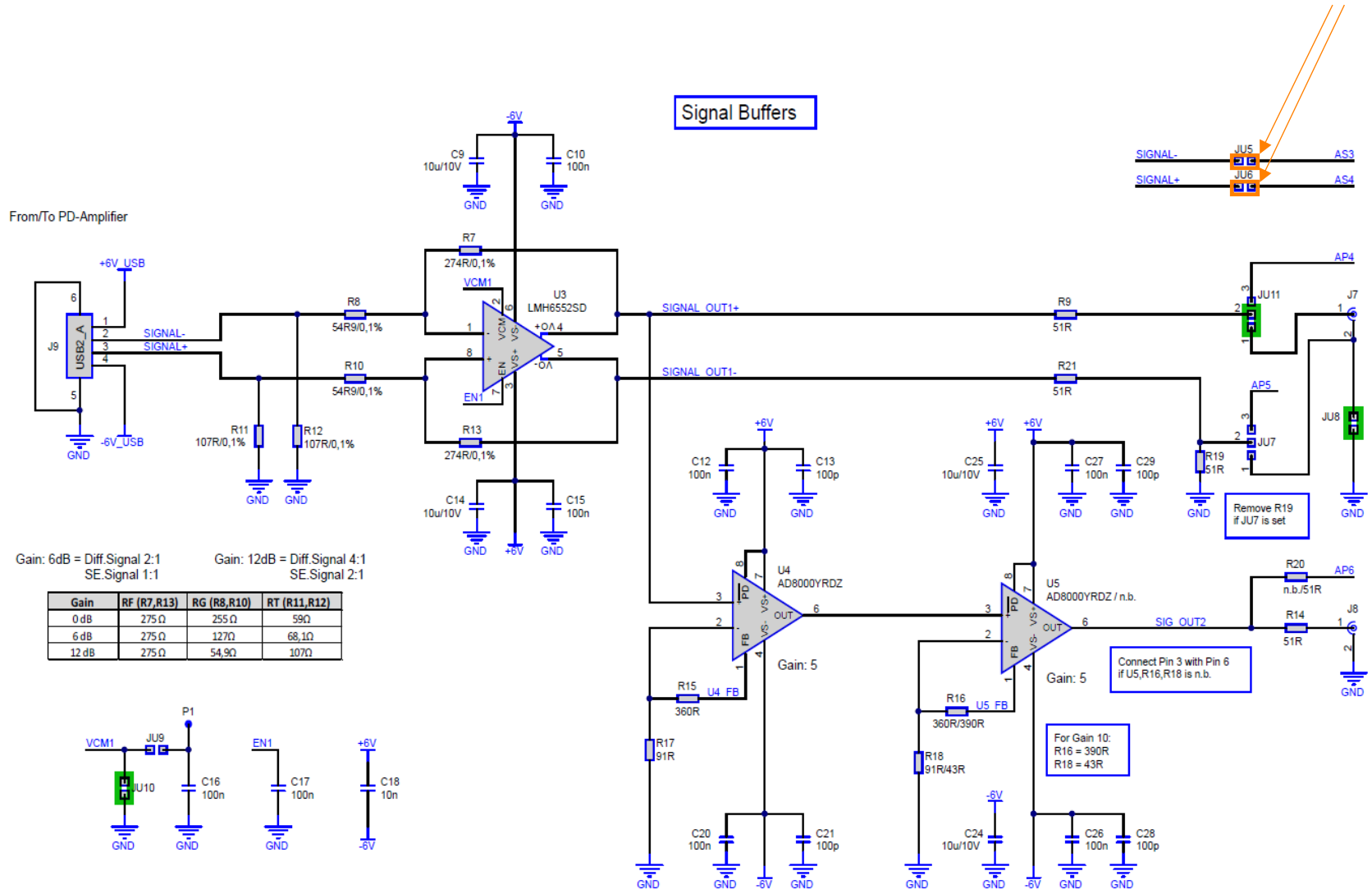

Gain: 6dB = Diff.Signal 2:1
SE.Signal 1:1

Gain: 12dB = Diff.Signal 4:1
SE.Signal 2:1

Gain	RF (R7,R13)	RG (R8,R10)	RT (R11,R12)
0 dB	275 Ω	255 Ω	59Ω
6 dB	275 Ω	127Ω	68,1Ω
12 dB	275 Ω	54,9Ω	107Ω

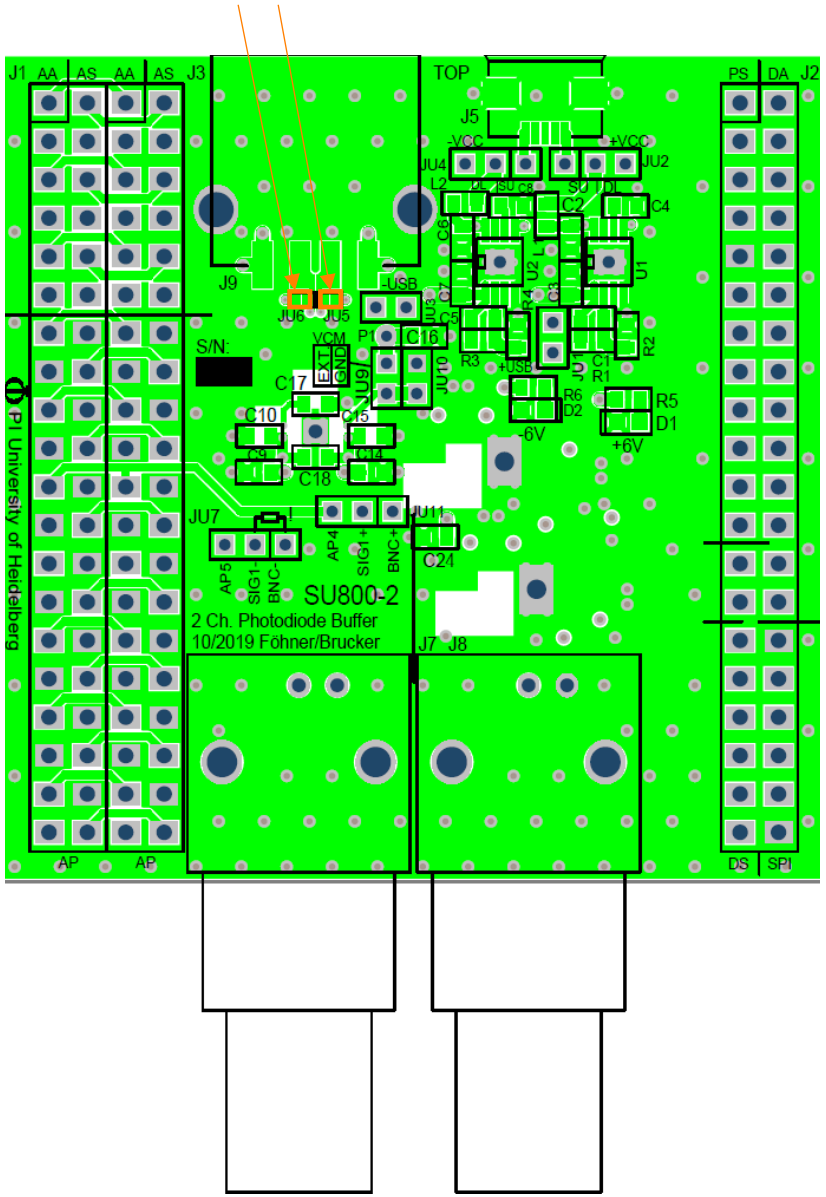

High Speed Subtractor with SU800:

Blue: factory jumper settings

Connecting AS3 to BNC1 (Signal- of SU800) and AS4 to BNC3 (Signal- of SU800)

Connect analog ground to digital ground

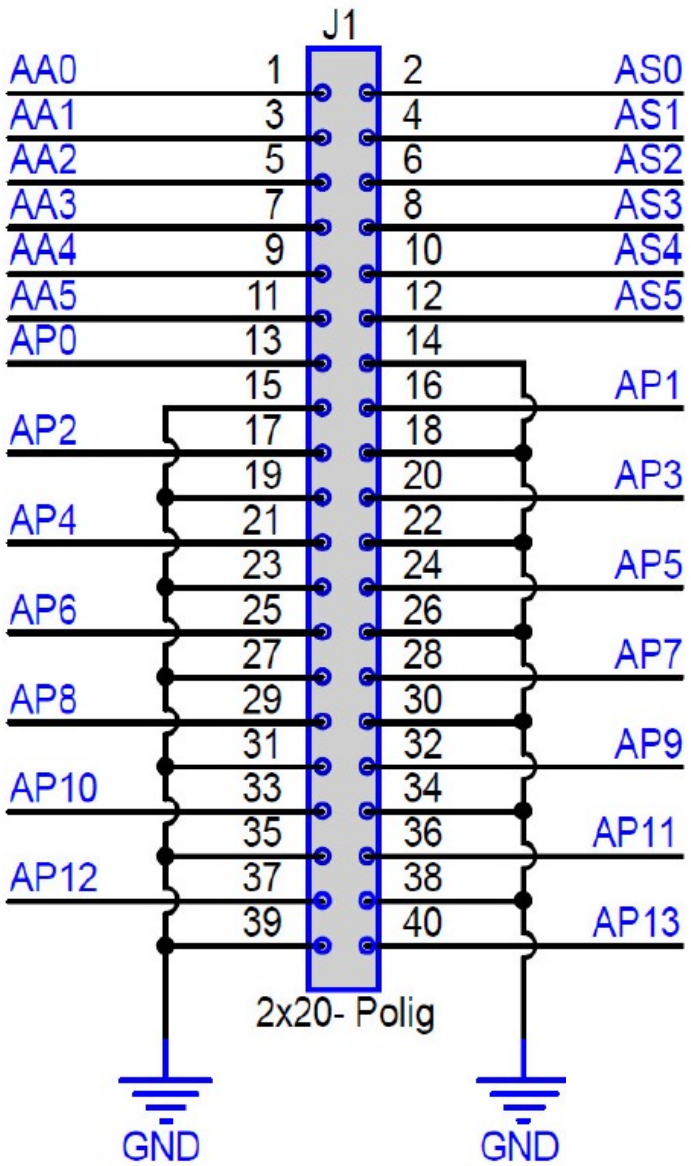

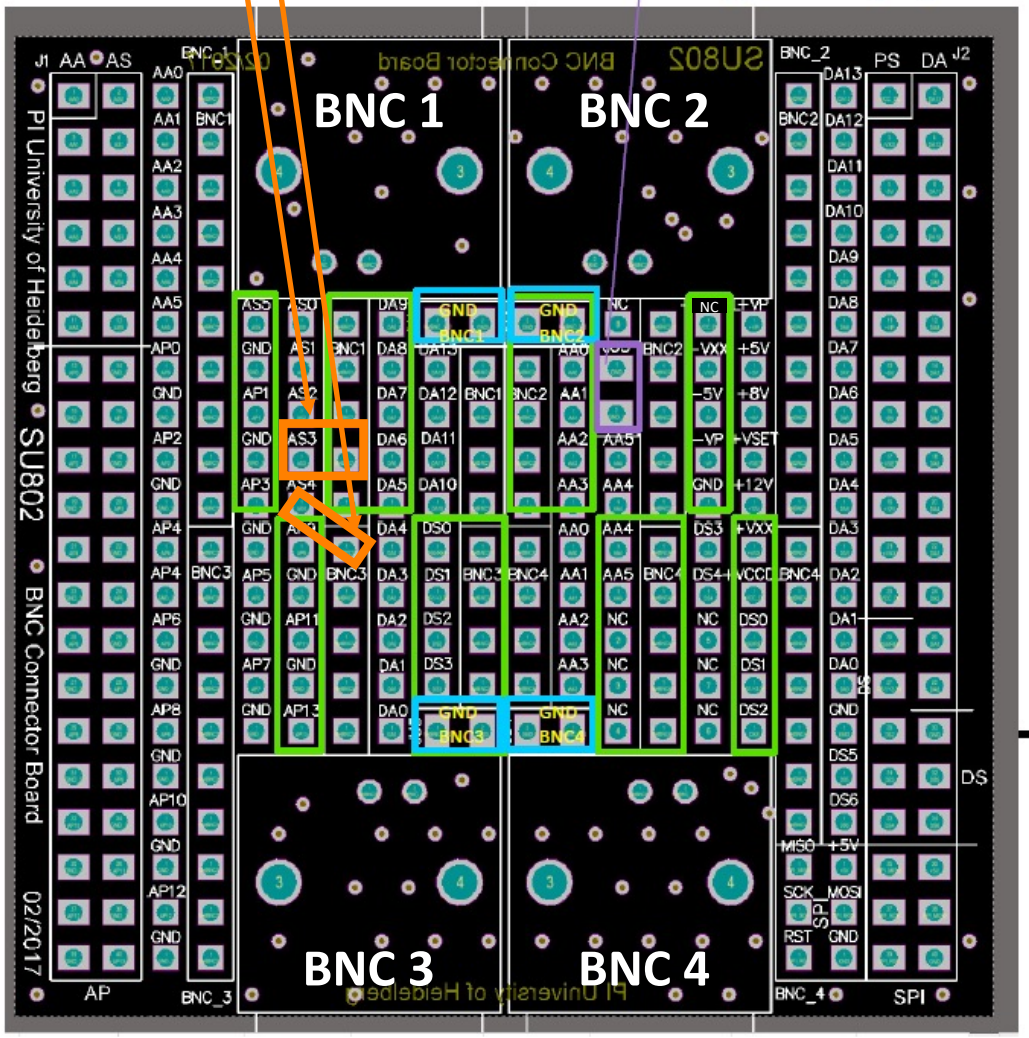

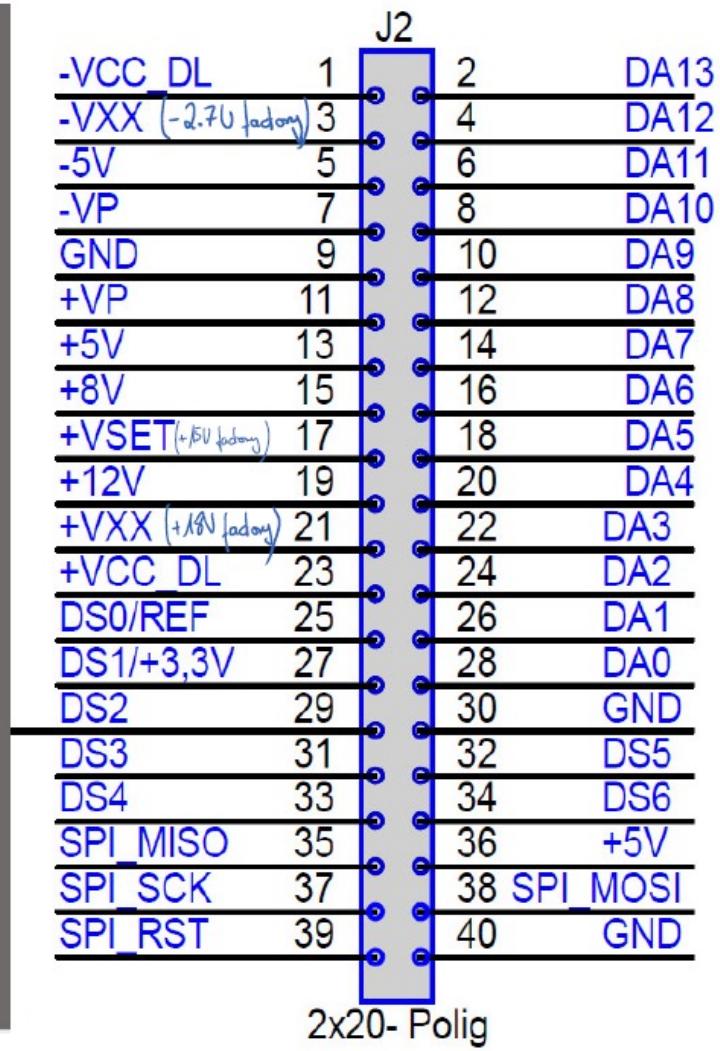

4 power supplies per driver

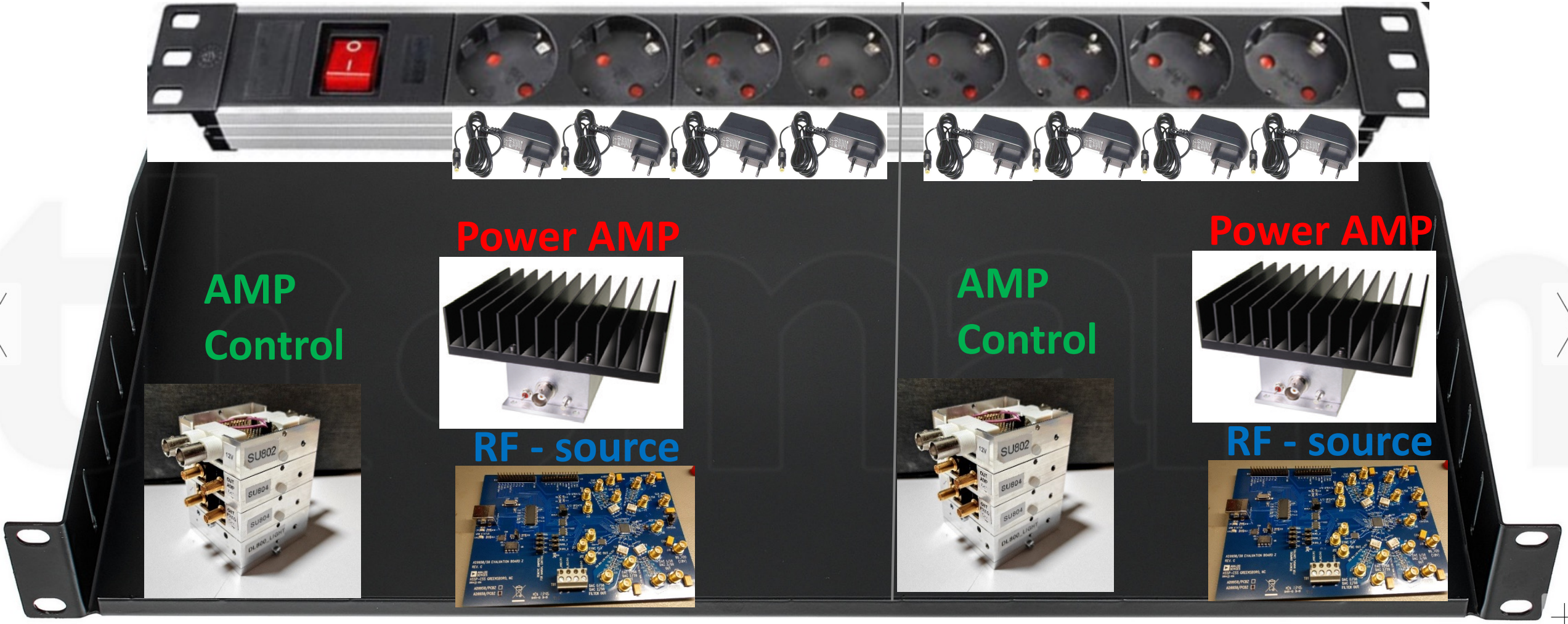

Temp stuff

SU807-1 Setting up Power Supply

Set up DL 800:

-Vxx	set to -2.7V
+12 V	needs to be available
V-	Jumper select (-Vp set to 6V)
V+	Jumper select (+Vset set to 6V)

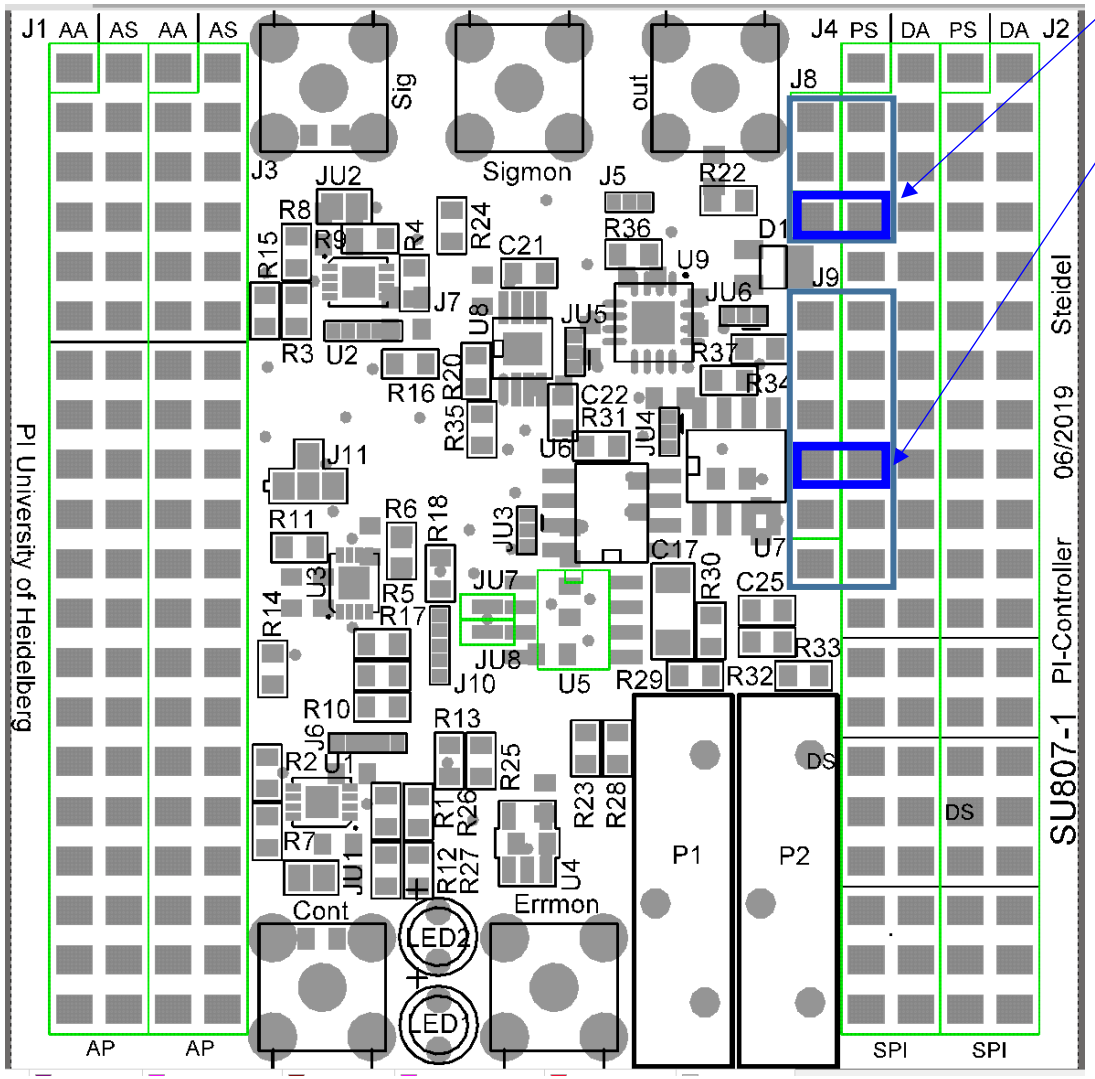

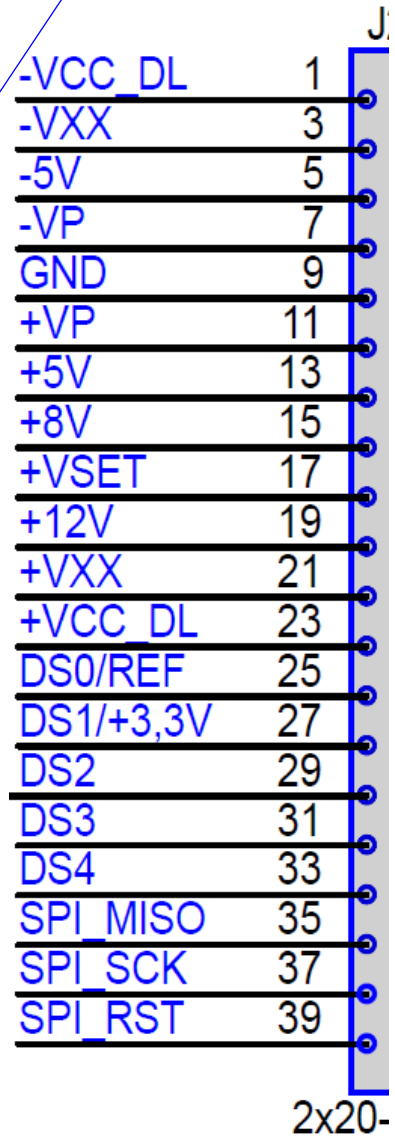

SU807
PI-Controller

Input

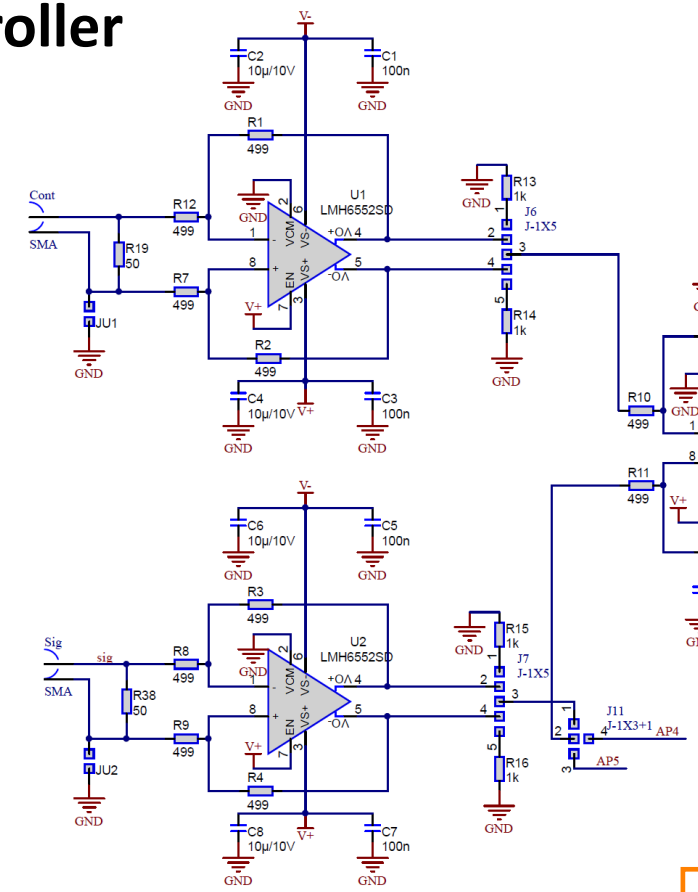

Error

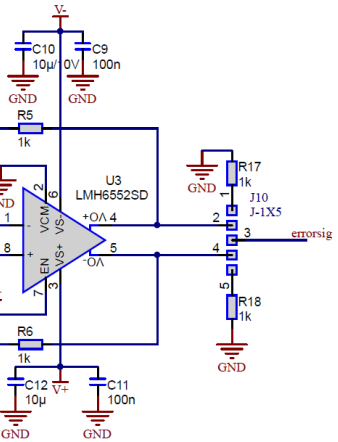

P,I

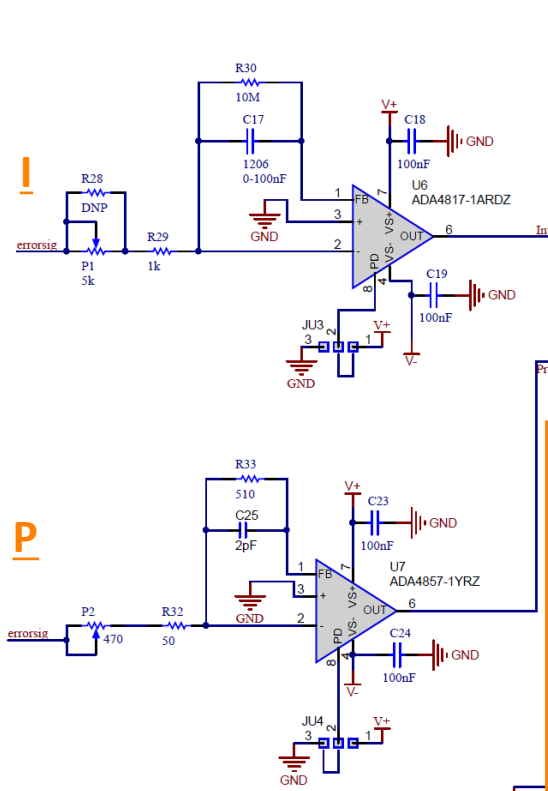

Output adder

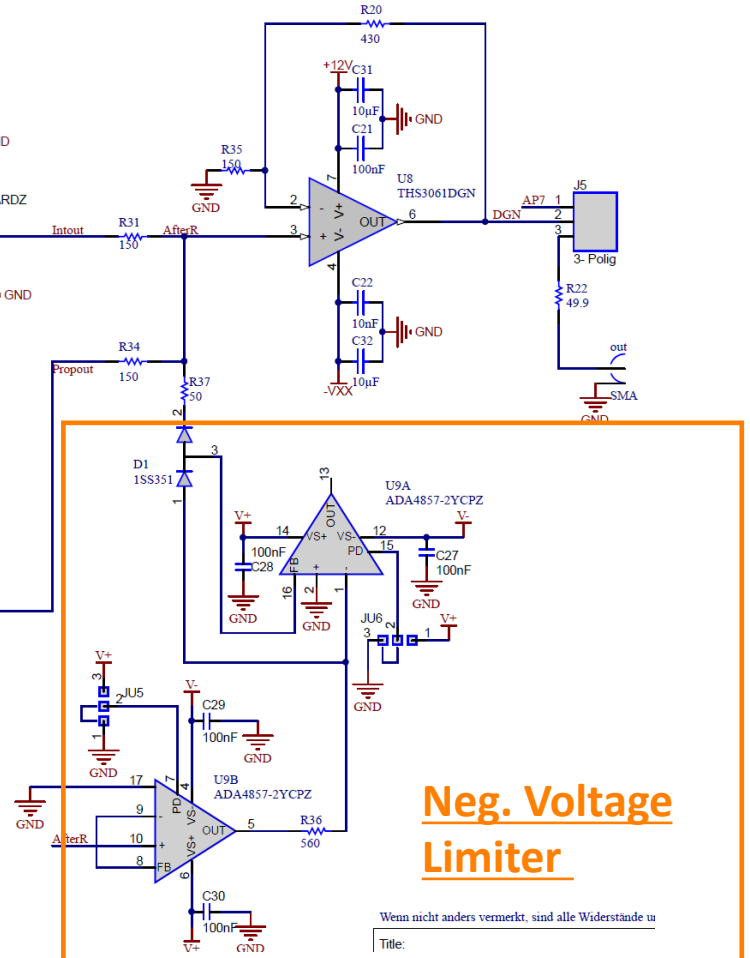

Neg. Voltage Limiter

Wenn nicht anders vermerkt, sind alle Widerstände u

Title:

Supply voltage select

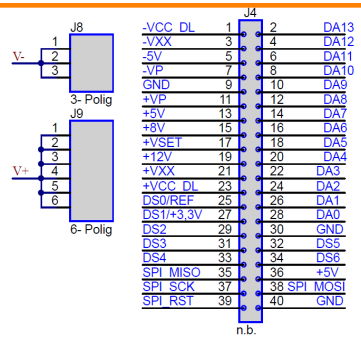

-(V-) + (V+) must not exceed 13.2V (abs max LMH6552)

if -Vp and +Vp do not supply enough current (max 150mA, load depening on load of monitor) use [-5V,+5V] or [-5V, Vset=+6V]

Monitors

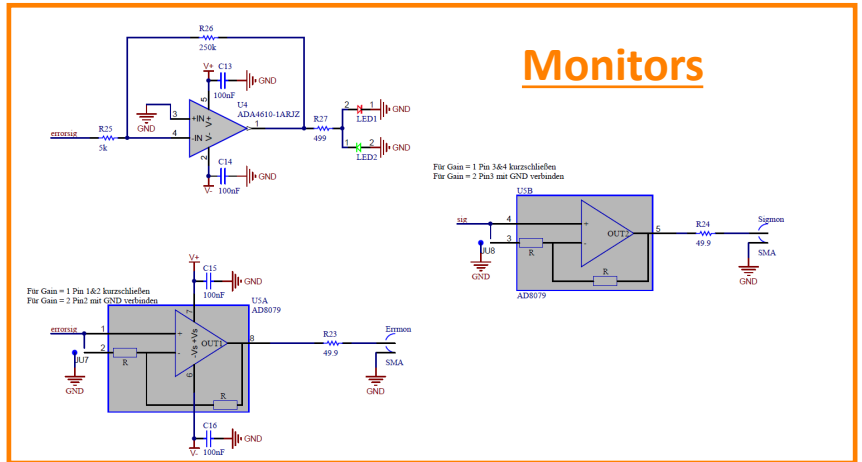

\\147.142.16.140\geraete\geraete\SU\SU807_PI_Controller

SU807-1

Power Spectral density

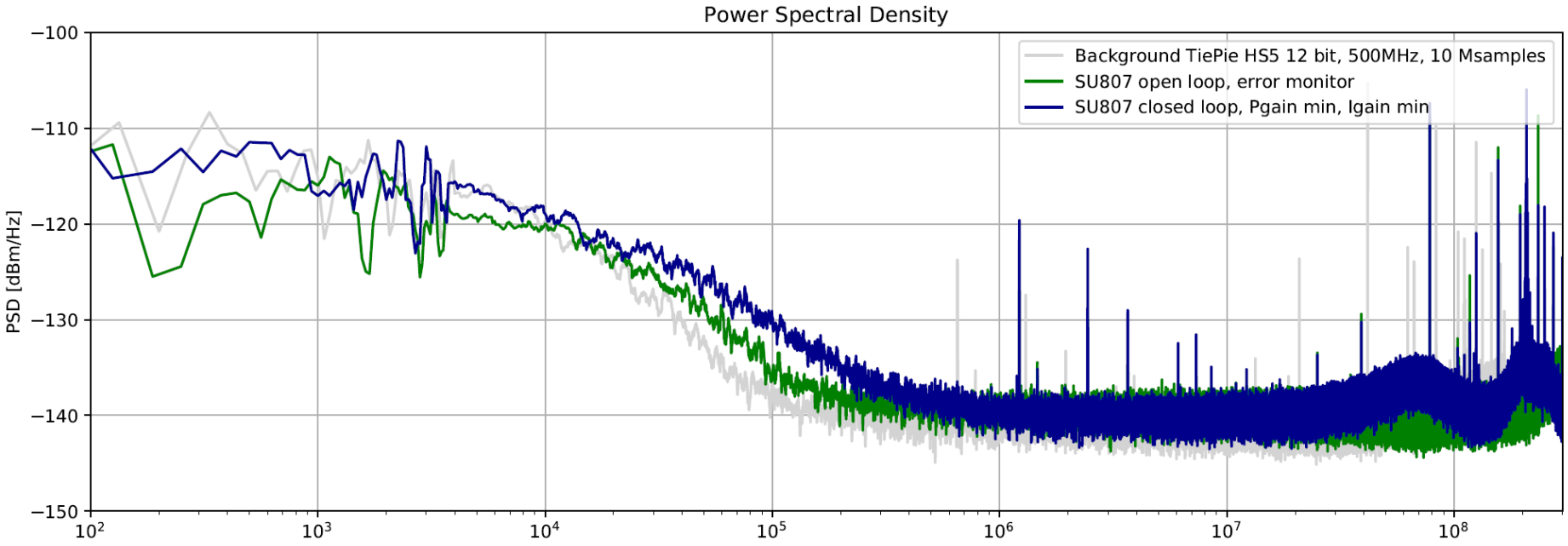

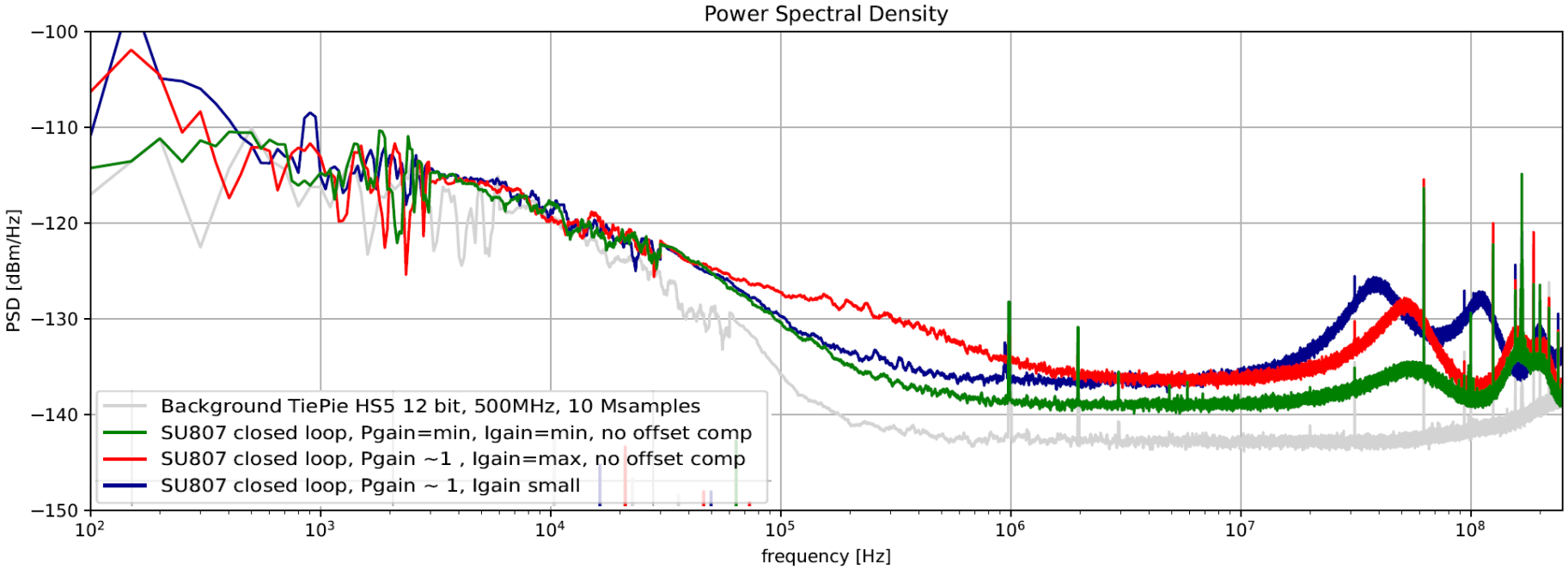

Step response for current value of capacity in I part (value unknown – probably C=100pF), I gain max

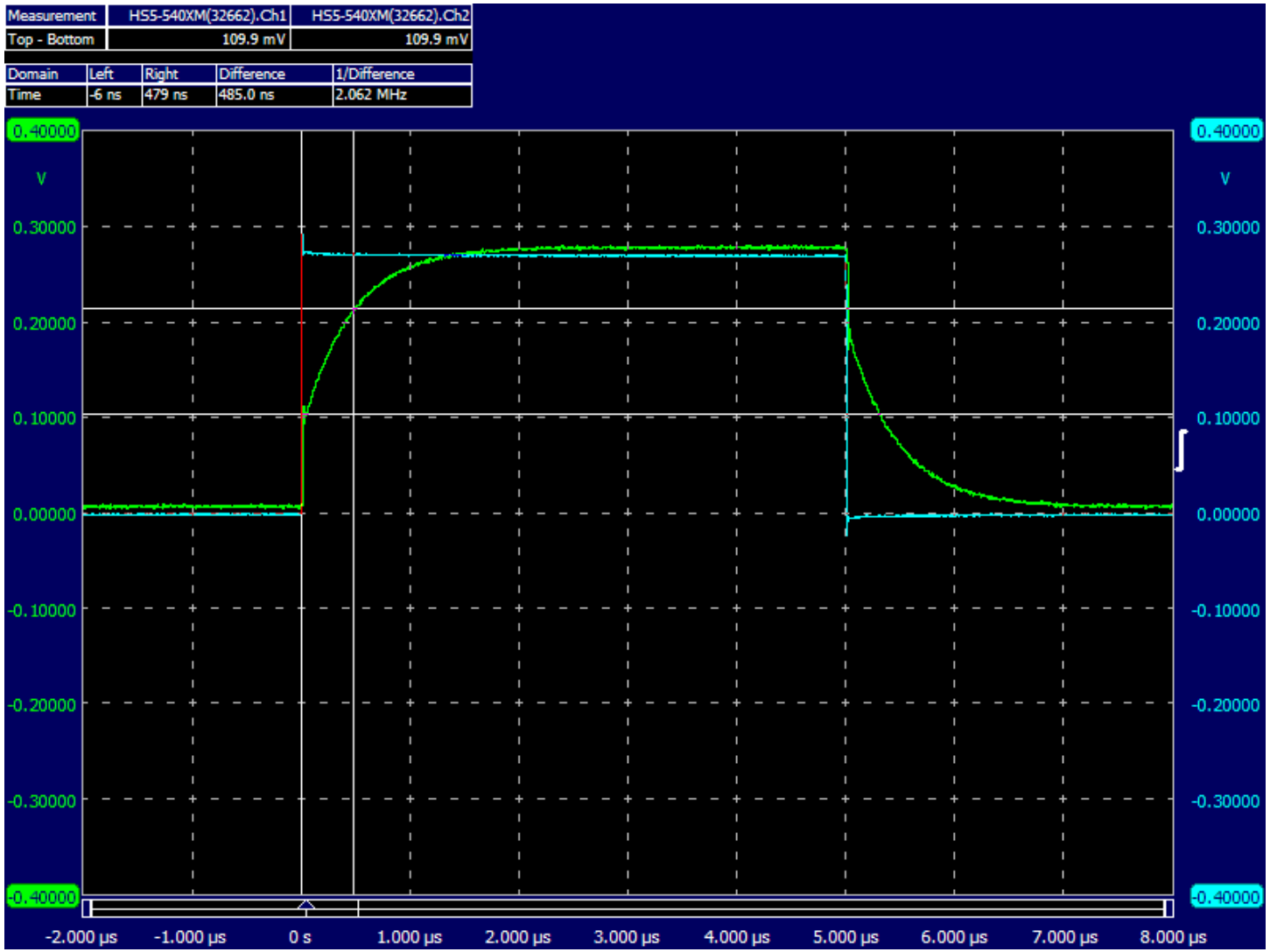

SU807 Modifications for second prototype

1) Modulation input hinzufügen (Notiz an Gunnar geschickt).
   150 Ohm zu AP9 standardmäßig nicht bestücken

2) Offset anpassung zu -30mV einfügen (Notiz Steffen)

3) Steck-Kapazität (sockel durchs board) im Feedback des I-teil

4) Steck-Kapazität im feedback des p-teil

5) Steckjumper um voltage limiter abzuschalten
Raster für Jumper 2 mm, siehe DL800.

6) Überbrückunsgmöglichkeit des input buffers

7) Bitte standard jumper settings wie im ersten Prototyp im Schaltplan vermerken und bei zukünftige fertigung entsprechend setzen

8) Werte der standard steckkapazitäten wie im ersten Prototyp

Fertigung neuer Prototyp:
- 4 PCBs bestellen

1)

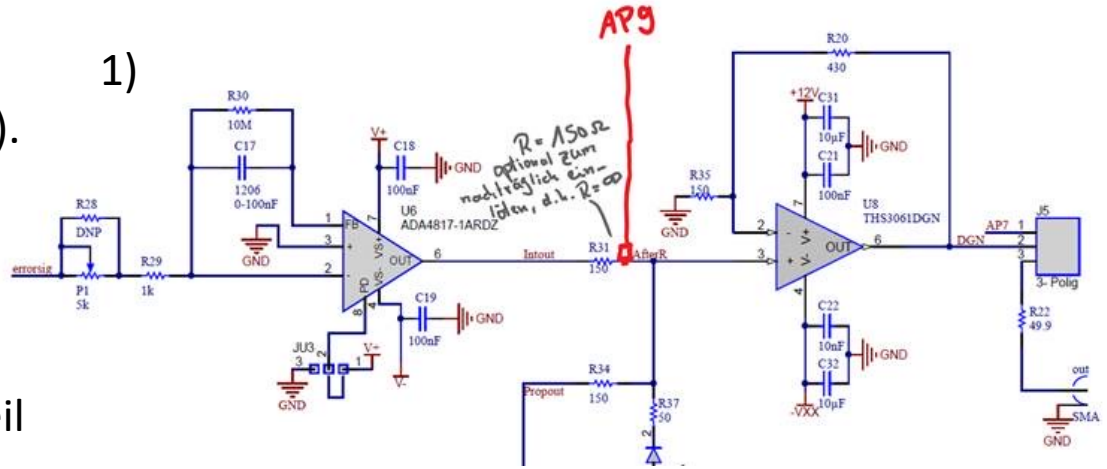

3)

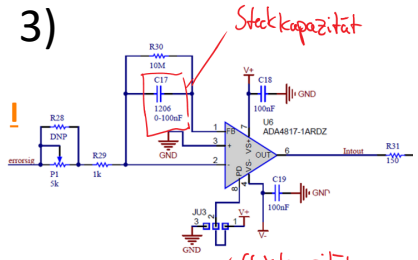

4)

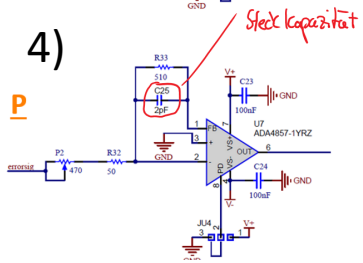
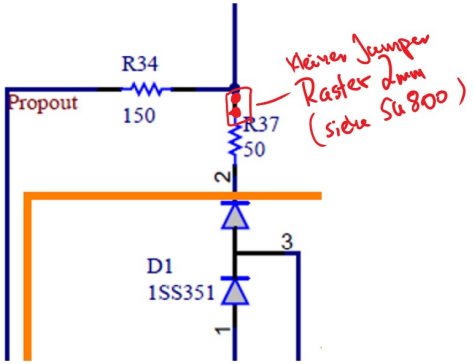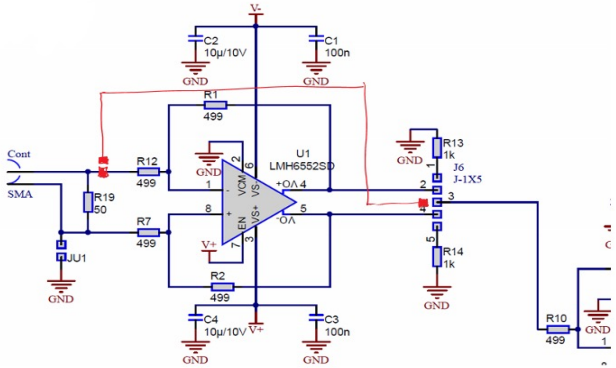
5)